Dairy Farms Biogas to Help Power High Speed Rail

Ted Harris
California Strategies
May 1, 2012

California Strategies, LLC

Overview

- Historical Challenges in California
- Mixed vs. Mixed Plug Flow Digester
- Benefits of a "Mixed Plug Flow" Anaerobic Digester
  - Higher Efficiency
  - Odor Control
  - Proven 24/7 Renewable, Distributed Generation
- Renewable Power Near High Speed Rail Alignment

Historical Challenges in CA

- Historical Technology Challenges
  - Reliability
  - Gas Production
  - Parasitic Load
- Upfront Cost
- Permitting
  - Air Quality
  - Water Quality
  - CEQA

Mixed Digesters

- Waste enters and exits simultaneously.
- Some of the fresh waste can go "straight from entrance to exit."
  - Incomplete digestion
  - potential pathogens
- Some waste stays in for longer than necessary.

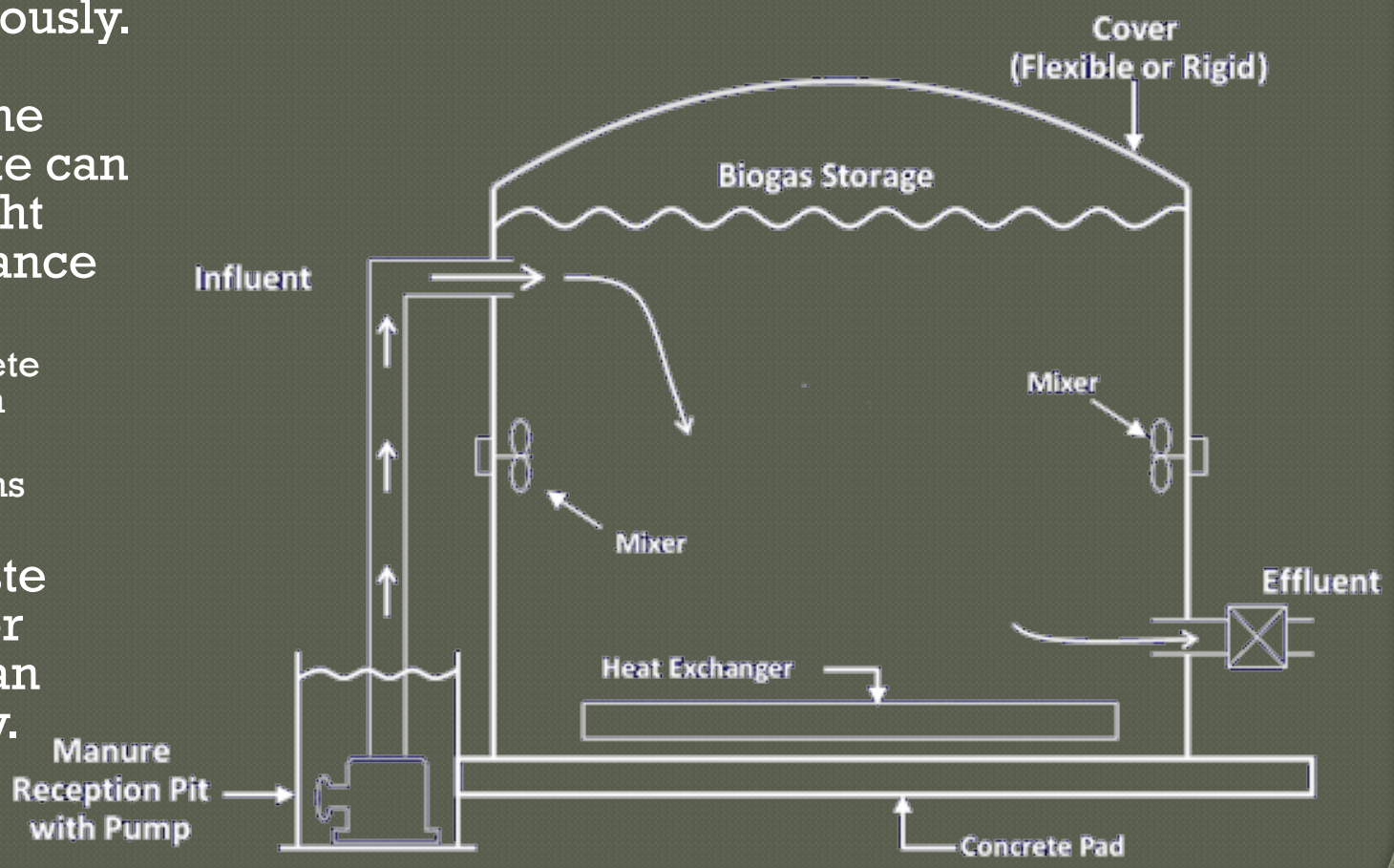

Mixed Plug Flow Digesters

Multiple stages of digestion are contained within a single vessel

Waste flows longitudinally. As fresh waste enters one end, only *fully-processed* waste is pushed out the other.

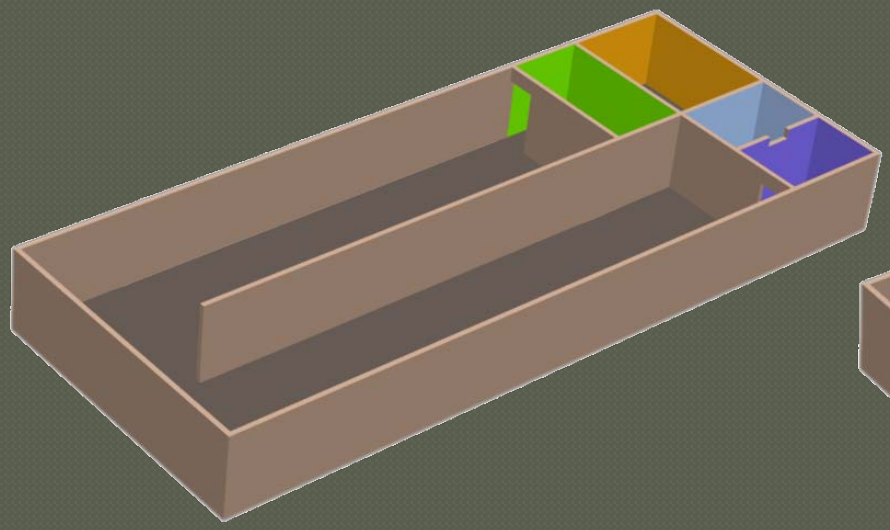

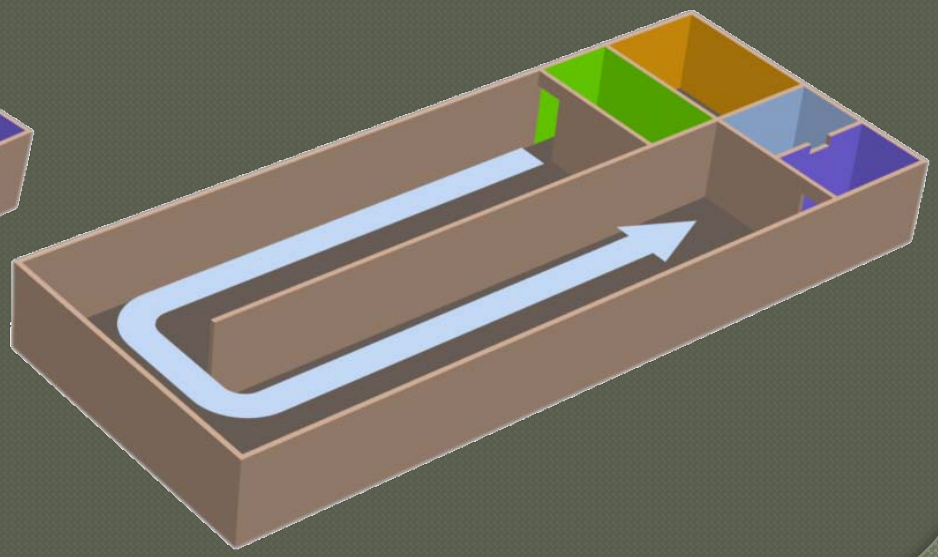

Mixed Plug Flow Digesters

To preserve retention time, mixing occurs around the *axis of flow*.
Waste slowly "corkscrews" its way through the digester.

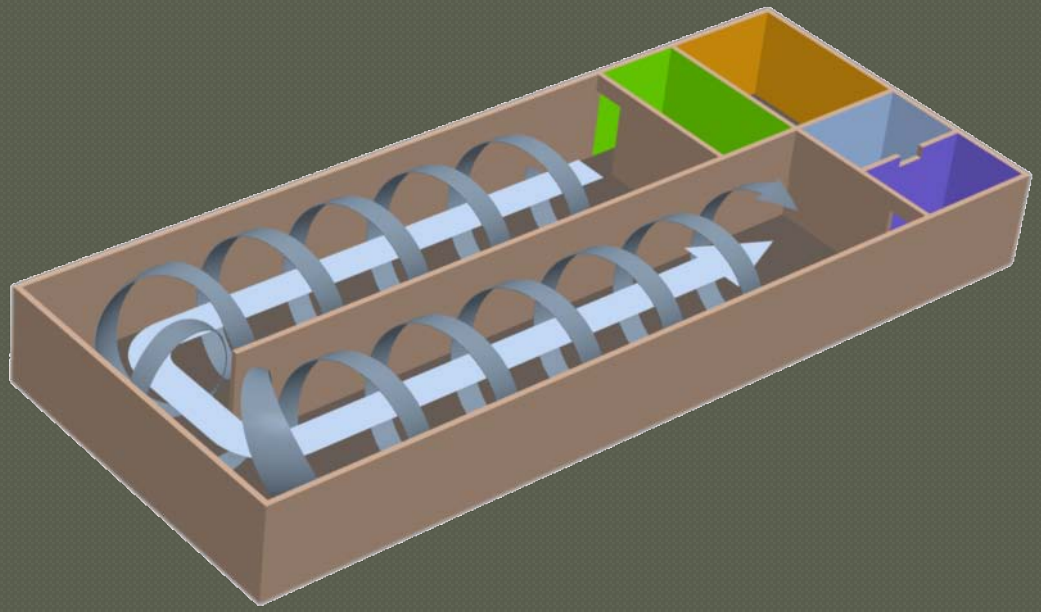

Largest Ag Digester in the US

15,000 cow milking dairy in Idaho, with 11M gallon capacity

4.5 MW generation installed

Commissioned in 2011

Benefits of Mixed Plug Flow

- Combine "Mixed" and "Plug-Flow" digesters
- Higher Efficiency
- Odor Control
- Reliability

Combine "Mixed" &"Plug-Flow"

MIXED

- **Advantages**
  - Solids & Liquids in Suspension
    - Less Stratification & Settling Issues
- **Disadvantages**
  - No Guaranteed Retention Time
    - Incomplete Pathogen & Volatile Fatty Acid Destruction

PLUG FLOW

- **Advantages**
  - Guaranteed Retention Time
    - Pathogen Destruction
    - Gas Production
  - High Solids Content
- **Disadvantages**
  - Solids Settling
  - Temperature Stratification

Higher Efficiency

- Sub-Grade Concrete Vessels
  - Bacteria growth is optimized by maintaining even temperatures
  - Less energy is required to maintain optimal operating temperatures
  - Better structural integrity

Odor Control

- Waste is collected and contained, then the odor is converted in the biogas engines
- Facilities can be located closer to populated areas
- To obtain permits in other states some communities are now requiring a modern digester for optimal odor management

24/7 Distributed Generation

Idaho dairy, 2010
Projected output 1081 kW/hr
Year-to-date output = 105% of projected

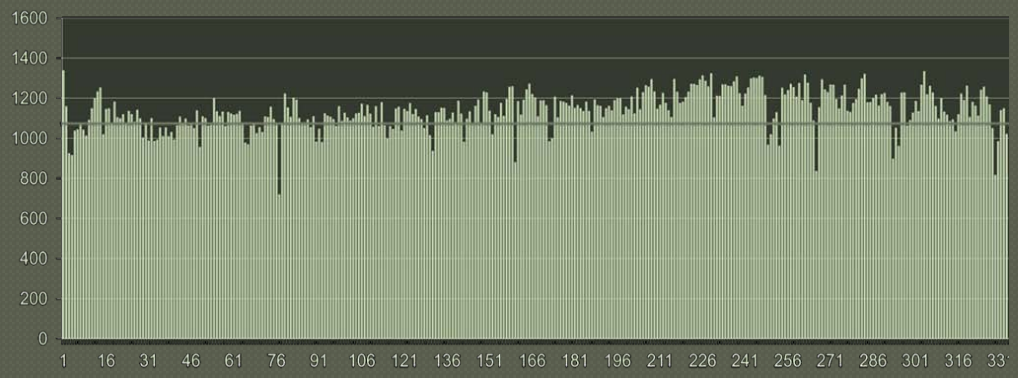

Solar Power Output (kW)

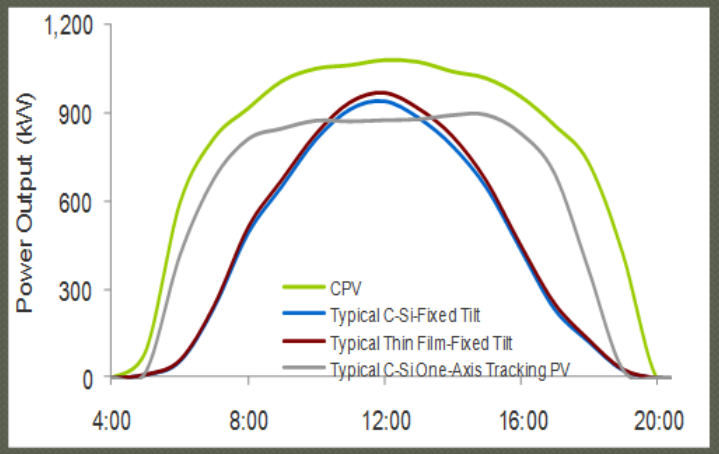

Cows do their thing all day, every day.

Electrical power generation is not dependent upon the sun shining or the wind blowing.

Renewable Energy Production

- Four Holstein Cows = 1 kW/hr
- Reliable GENSET Run-time average 93-97%
- Low Parasitic Load: 5-9%
- Huge environmental benefits

Power for High Speed Rail

- High Speed Rail system estimated to use over 3,000 GWh annually in 2030
- There are around 1,400,000 cows in California
- 1,400,000 cows on hybrid digester systems could potentially produce approximately up to 2,000-3,000 GWh annually
  - If use substrates the power production could potentially be over 4,000 GWh annually

Power for High Speed Rail

- California is the largest dairy state
- Bulk of dairies close to the HSR alignment
- Biogas could provide a substantial portion of HSR electrical demand
- Continuous, reliable, and renewable distributed generation

Thank you

Ted Harris
Principal
California Strategies
tharris@calstrat.com
916-290-6152