Chapter 10. Quantity Control

Article 1. General

4500. Standards for Fresh Berries. - Fresh berries shall be sold by net weight; or by volume in measure containers in specified capacities as follows:

(a) Strawberries--Dry pint (33.6 cubic inches; net weight 12 oz), or dry quart (67.2 cubic inches; net weight 1 lb. 6 oz).

(b) All other berries--Dry pint (33.6 cubic inches; net weight 12 oz), or half dry pint (16.8 cubic inches; net weight 8 oz).

Half dry pints, dry pints, and dry quarts, when sold by volume, shall not be deemed to be packages for labeling purposes.

Berry containers (boxes, baskets or packaging in any manner), whether opened or covered shall not have a false bottom or be constructed as to facilitate deception or fraud.

NOTE: Authority cited: Sections 12027 and 12107.1, Business and Professions Code. Reference: Sections 12107.1 and 12601, Business and Professions Code.

4501. Fish Sale by Weight. - The provisions of Section 12024.5, Chapter 1, Division 5 of the California Business and Professions Code shall apply to the sale or advertisement for sale of fin fish and crustaceans, when sold for human consumption and, when not alive.

NOTE: Authority cited: Sections 12027 and 12609, Business and Professions Code. Reference: Sections 12024.5 and 12024.8, Business and Professions Code.

4502. Wood for Fuel Purposes.

Renumbered to Article 3, Sections 4530 - 4536.2 (3-1-96).

NOTE: Authority cited: Sections 12027 and 12609, Business and Professions Code. Reference: Sections 12024.5 and 12024.8, Business and Professions Code.

4503. Gravimetric Testing of Fluid Products and Products Sold by Count. - Products sold by fluid measure or by count may be tested gravimetrically, by weights and measures officials, using procedures established by the Director. These procedures shall incorporate a statistical sampling plan established by Title 4, Division 9, Chapter 11.

NOTE: Authority cited: Sections 12027, 12608 and 12609, Business and Professions Code. Reference: Sections 12608 and 12609, Business and Professions Code.

[THIS PAGE WAS LEFT INTENTIONALLY BLANK]

INTRODUCTION

as adopted by
The National Conference on Weights and Measures

Background

The Uniform Packaging and Labeling Regulation was first adopted during the 37th National Conference on Weights and Measures in 1952. Reporting to the Conference, the Committee on Legislation stated:

The National Conference should adopt a model package regulation for the guidance of those States authorized to adopt such a regulation under provisions of their weights and measures laws. Since so much of the work of weights and measures officials in the package field concerns food products, the importance of uniformity between the Federal Food and Drug Administration's regulations and any model regulations to be adopted by this Conference cannot be overemphasized.

Since its inception, the Uniform Packaging and Labeling Regulation has been continually revised to meet the complexities of an enormous expansion in the packaging industry--an expansion that, in late 1966, brought about the passage of the Fair Packaging and Labeling Act (FPLA). Recognizing the need for compatibility with the Federal Act, the Committee on Laws and Regulations of the 53rd National Conference in 1968 amended the "Model Packaging and Labeling Regulation" (renamed in 1983) to parallel regulations adopted by Federal agencies under FPLA. The process of amending and revising this Regulation is a continuing one, in order to keep it current with practices in the packaging field and make it compatible with appropriate Federal regulations. Amendments and additions since 1971 are noted at the end of each section.

The revision of 1978 provided for the use of the International System of Units (SI), the metric system, on labels as well as allowing SI-only labels for those commodities not covered by Federal laws or regulations. "SI" means the International System of Units as established in 1960 by the General Conference on Weights and Measures and interpreted or modified for the United States by the Secretary of Commerce. [See Metric Conversion Act of 1975 (Public Law 94-168, § 3(1) and § 4(4), and NIST Special Publication 814 - Metric System of Measurement; Interpretation of the International System of Units for the United States, or the Federal Register of December 20, 1990, (FR 90-21913) or subsequent revisions.] In 1988, Congress amended the Metric Conversion Act of 1975 (see § 5146 of Public Law 100-418) to declare that it is the policy of the United States to designate the International System of Units of measurement as the preferred system of weights and measures for U.S. trade and commerce. In 1992, Congress amended the Federal Fair Packaging and Labeling Act (FPLA) to require the most appropriate units of the SI and the customary inch-pound systems of measurement on certain consumer commodities. The 1993 amendments to NIST Handbook 130 require SI and inch-pound units on certain consumer commodities in accordance with Federal laws or regulations. Requirements for labeling in both units of measure are effective February 14, 1994, under FPLA and as specified in § 15 Effective Date; except as specified in § 11.32. SI Units, Exemptions for Consumer Commodities. SI-only labeling is not permitted on consumer commodities unless specifically required in this regulation or by Federal law or regulation.

Nothing contained in this regulation should be construed to supersede any labeling requirement specified in Federal law or to require the use of SI units on nonconsumer packages.

The National Conference on Weights and Measures is sponsored by the National Institute of Standards and Technology in partial implementation of its statutory responsibility for "cooperation with the States in securing uniformity in weights and measures laws and methods of inspection."

[THIS PAGE LEFT INTENTIONALLY BLANK]

Article 2. Uniform Packaging and Labeling Regulation

4510. This section incorporates the adoption, by reference, of the National Institute of Standards and Technology Handbook 130 "Uniform Packaging and Labeling Regulation" (UPLR).

4511. The following sections of Handbook 130 UPLR are not adopted and are annotated "Not Adopted" in the text:

Section 2.11. Petroleum Products.

Section 6.15. Character of Declaration: Average.

Section 7.6. Character of Declaration: Average.

Section 12. Variation to be Allowed.

Section 13. Retail Sale Price Representations.

Section 14. Revocation of Conflicting Regulations.

Section 15. Effective Date.

4512. These requirements are different than, or in addition to, the requirements of Handbook 130 UPLR. They are shaded, bordered, and numbered in the 4512 series to differentiate them from the Handbook 130 requirements.

4512.1 Polyethylene Products.

4512.2 Animal Bedding.

4512.3 Enforcement.

[THIS PAGE LEFT INTENTIONALLY BLANK]

Uniform Packaging and Labeling Regulation

Preamble

The purpose of this regulation is to provide accurate and adequate information on packages as to the identity and quantity of contents so that purchasers can make price and quantity comparisons.
(Added 1989)

Section 1. Application

This regulation shall apply to packages, but shall not apply to:

(a) inner wrappings not intended to be individually sold to the customer,

(b) shipping containers or wrapping used solely for the transportation of any commodities in bulk or in quantity to manufacturers, packers, or processors, or to wholesale or retail distributors, but in no event shall this exclusion apply to packages of consumer or nonconsumer commodities, as defined herein,
(Added 1971)

(c) auxiliary containers or outer wrappings used to deliver packages of such commodities to retail customers if such containers or wrappings bear no printed matter pertaining to any particular commodity,

(d) containers used for retail tray pack displays when the container itself is not intended to be sold (e.g., the tray that is used to display individual envelopes of seasonings, gravies, etc., and the tray itself is not intended to be sold), or

(e) open carriers and transparent wrappers or carriers for containers when the wrappers or carriers do not bear any written, printed, or graphic matter obscuring the label information required by this regulation.

This regulation shall not apply to exports for foreign countries. (Amended 1994)

Section 2. Definitions

2.1. Package. - Except as modified by § 1. Application, the term "package," whether standard package or random package, means any commodity:

(a) enclosed in a container or wrapped in any manner in advance of wholesale or retail sale, or

(b) whose weight **(Note 1 see page QC-7)** or measure has been determined in advance of wholesale or retail sale. An individual item or lot of any commodity on which there is marked a selling price based on an established price per unit of weight or of measure shall be considered a package or packages.
(Amended 1988, 1991)

NOTE 1: *When used in this regulation, the term "weight" means "mass" (See paragraph I. in Section I. Introduction, of NIST Handbook 130 for an explanation of these terms.)*

2.2. Consumer Package: Package of Consumer Commodity. - A package that is customarily produced or distributed for sale through retail sales agencies or instrumentalities for consumption or use by individuals for the purposes of personal care or in the performance of services ordinarily rendered in or about the household or in connection with personal possessions.
(Amended 1988, 1991)

2.3. Nonconsumer Package: Package of Nonconsumer Commodity. - Any package other than a consumer package, and particularly a package intended solely for industrial or institutional use or for wholesale distribution.
(Amended 1988, 1991)

2.4. Random Package. - A package that is one of a lot, shipment, or delivery of packages of the same consumer commodity with no fixed pattern of net contents.
(Amended 1988, 1990)

2.5. Label. - Any written, printed, or graphic matter affixed to, applied to, attached to, blown into, formed, molded into, embossed on, or appearing upon or adjacent to a consumer commodity or a package containing any consumer commodity, for purposes of branding, identifying, or giving any information with respect to the commodity or to the contents of the package, except that an inspector's tag or other non-promotional matter affixed to or appearing upon a consumer commodity shall not be considered a label requiring the repetition of label information required by this regulation.
(Amended 1988)

2.6. Person. - The term "person" means either singular or plural, and shall include any individual, partnership, company, corporation, association, and society.
(Amended 1988)

2.7. Principal Display Panel or Panels. - That part, or those parts, of a label that is, or are, so designed as to most likely be displayed, presented, shown, or examined under normal and customary conditions of display and purchase. Wherever a principal display panel appears more than once on a package, all requirements pertaining to the "principal display panel" shall pertain to all such "principal display panels."
(Amended 1988)

2.8. Multi-Unit Package. - A package containing two or more individual packages of the same commodity, in the same quantity, intended to be sold as a multi-unit package, but where the component packages are labeled individually in full compliance with all requirements of this regulation.
(Amended 1988)

2.9. Combination Package. - A package intended for retail sale, containing two or more individual packages or units of dissimilar commodities. (**Examples:** An antiquing or house-cleaning kit; sponge and cleaner; lighter fluid and flints.)
(Added 1989)

2.10. Variety Package. - A package intended for retail sale, containing two or more individual packages or units of similar, but not identical, commodities. Commodities that are generically the same, but that differ in weight, measure, volume, appearance, or quality, are considered similar but not identical. (**Examples:** 2 sponges of different sizes; plastic tableware, consisting of 4 spoons, 4 knives, and 4 forks.)
(Added 1989)

2.11. Petroleum Products.

[NOT ADOPTED]

2.12. Spot Label. - A spot label is a label, clearly defined by means of a border, indentation, or other means, that covers only a small portion of the surface of a principal display panel of a package; the entire portion of the principal display panel outside the area of the label contains no printed or graphic matter of any kind. A spot label may contain all required labeling information (identity, responsibility, and net contents), but it must at least indicate the identity and net contents. See § 11.29. for net contents placement exemption for a spot label. Also see Figure 1, page QC-8.
(Added 1990; Amended 1991)

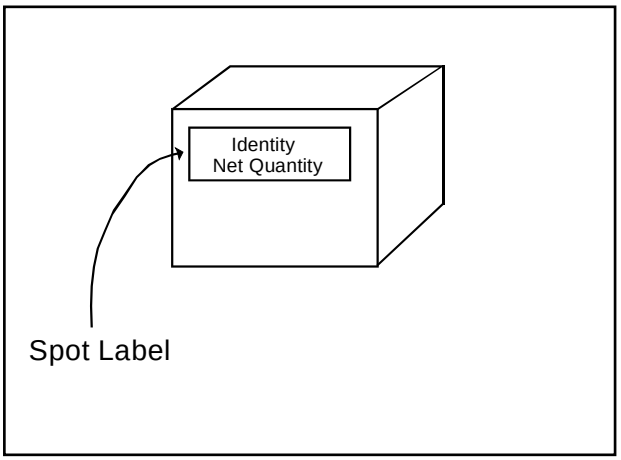

Figure 1.

2.13. Header Strip. - A header label or header strip is a label that is attached across the top of a transparent or opaque bag or other container that bears no other printed or graphic material. See § 11.30. for net contents placement exemptions. Also see Figure 2, page QC-9.
(Added 1990)

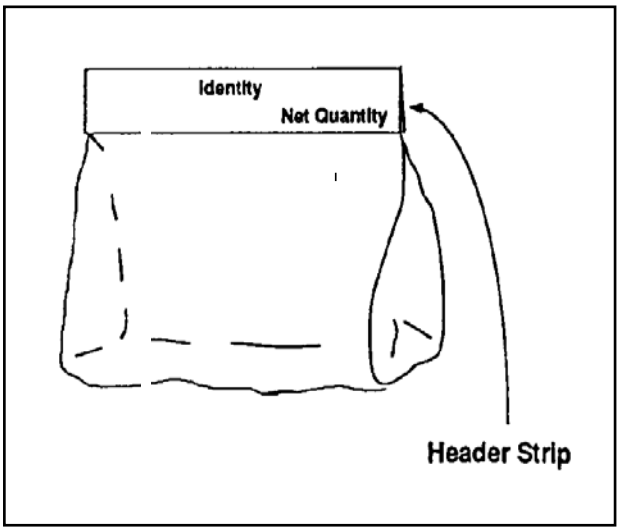

Figure 2.

2.14. Standard Package. - A package that is one of a lot, shipment, or delivery of packages of the same commodity with identical net contents declarations; **for example**, l L bottles or 12 fl oz cans of carbonated soda, 500 g or 5 lb bags of sugar, or 100 m packages of rope.
(Added 1991)

2.15. SI or SI Units. – "SI" or "SI Units" means the International System of Units as established in 1960 by the General Conference on Weights and Measures and interpreted or modified for the United States by the Secretary of Commerce. [See Metric Conversion Act of 1975 (Public Law 94-168, § 3 (1) and § 4 (4), and NIST Special Publication 814 - Metric System of Measurement; Interpretation of the International System of Units for the United States or Federal Register of December 20, 1990 (FR 90-21913).]
(Added 1993)

Section 3. Declaration of Identity: Consumer Package

3.1. Declaration of Identity: Consumer Package. - A separate declaration of identity [NOTE 2, see page QC-10] on a consumer package shall appear on the principal display panel and shall not be misleading or deceptive. The identity shall be in terms of:

(a) the name specified in or required by any applicable Federal or State law or regulation or, in the absence of this,

(b) the common or usual name or, in the absence of this,

(c) the generic name or other appropriate description, including a statement of function (such as "cleaning powder").
(Amended 1990; Note added 1986)

NOTE 2: *Section 19.(a) of the Uniform Weights and Measures Law (and 21 CFR 101.100 (b) (3) for non-meat and non-poultry foods) specifically exempts food packages from identity statements if the commodity is a food, other than meat or poultry, that was repackaged in a retail establishment and the food is displayed to the purchaser under either of the following circumstances: (1) its interstate labeling is clearly in view or with a counter card, sign or other appropriate device bearing prominently and conspicuously the common or usual name of the food or (2) the common or usual name of the food is clearly revealed by its appearance.*
(Added 1986) (Amended 2001)

3.1.1. Parallel Identity Declaration: Consumer Package. A declaration of the identity on a consumer package shall appear generally parallel to the base on which the package rests as it is designed to be displayed.

Section 4. Declaration of Identity: Nonconsumer Package

A declaration of identity [NOTE 2] on a nonconsumer package shall appear on the outside of a package and shall not be misleading or deceptive. The identity shall be in terms of:

(a) the name specified in or required by any applicable Federal or State law or regulation or, in the absence of this,

(b) the common or usual name or, in the absence of this,

(c) the generic name or other appropriate description, including a statement of function (such as "cleaning powder").
(Amended 1990, Note added 1986)

Section 5. Declaration of Responsibility: Consumer and Nonconsumer Packages

Any package kept, offered, or exposed for sale, or sold, at any place other than on the premises where packed shall specify conspicuously on the label of the package the name and address of the manufacturer, packer, or distributor. The name shall be the actual corporate name, or, when not incorporated, the name under which the business is conducted. The address shall include street address, city, state (or country if outside the United States), and ZIP Code (or the mailing code if any, used in countries other than the United States); however, the street address may be omitted if this is shown in a current city directory or telephone directory.

If a person manufactures, packs, or distributes a commodity at a place other than his principal place of business, the label may state the principal place of business in lieu of the actual place where the commodity was manufactured or packed or is to be distributed, unless such statement would be misleading. Where the commodity is not manufactured by the person whose name appears on the label, the name shall be qualified by a phrase that reveals the connection such person has with such commodity, such as "Manufactured for and packed by_____," "Distributed by _____", or any other wording of similar import that expresses the facts.

Section 6. Declaration of Quantity: Consumer Packages

6.1. General. [NOTE 3] - The International System of Units (SI), known as the metric system and the inch-pound system of weights and measures are recognized as proper systems to be used in the declaration of quantity. Effective February 14, 1994, appropriate units of both systems shall be presented in a declaration of quantity except as specified in § 11.32. SI Units, Exemptions for Consumer Commodities.

(Amended 1985, 1990, 1993)

NOTE 3: *Packages subject to this Section and/or the Federal Fair Packaging and Labeling Act shall be labeled in units of the International System of Units (SI) and the inch-pound system of measure effective February 14, 1994, [except for seed (see § 10.10. Packaged Seed) and camera film and recording tape (see § 11.22. Camera Film, Video Recording Tape, Audio Recording Tape and Other Image and Audio Recording Media Intended for Retail Sale and Consumer Use), and as specified in § 11.32. SI Units, Exemptions - Consumer Commodities]. SI unit may appear first.*
(Added 1982; Amended 1990, 1993)

6.2. Largest Whole Unit. - Where this regulation requires that the quantity declaration be in terms of the largest whole unit, the declaration shall, with respect to a particular package, be in terms of the largest whole unit of weight or measure, with any remainder expressed (following the requirements of § 6.5.2. (a) and § 6.11. Fractions):

(a) SI Units, in decimal fractions of such largest whole unit.

(b) Inch-Pound Units

(1) in common or decimal fractions of such largest whole unit, or

(2) in the next smaller whole unit, or units, with any further remainder in terms of common or decimal fractions of the smallest unit present in the quantity declaration.

6.3. Net Quantity. - A declaration of net quantity of the commodity in the package, exclusive of wrappers and any other material packed with such commodity (except as noted in § 10.3. Aerosols and Similar Pressurized Containers), shall appear on the principal display panel of a consumer package and, unless otherwise specified in this regulation (see § 6.6. through 6.9. Prescribed Units), shall be in terms of the largest whole unit.

6.3.1. Use of "Net Mass" or "Net Weight." - A quantity declaration may stand alone [e.g., "200 g (7 oz)" or "1 lb (453 g)"] or may include the term "net mass" or "net weight" either preceding or following the declaration. The term "net" by itself may be used on food labels. However, the quantity of contents shall always declare the net quantity of contents, even when such terms are not used.
(Amended 1993)

6.3.2. Lines of Print or Type. - A declaration of quantity may appear on one or more lines of print or type.
(Amended 1982)

6.4. Terms: Weight, Liquid Measure, Dry Measure, or Count. - The declaration of the quantity of a particular commodity shall be expressed in terms of:

- weight if the commodity is solid, semisolid, viscous, or a mixture of solid and liquid, or
- liquid measure if the commodity is liquid, or
- dry measure if the commodity is dry, or
- numerical count.

However, if there exists a firmly established general consumer usage and trade custom with respect to the terms used in expressing a declaration of quantity of a particular commodity, such a declaration of quantity may be expressed in its traditional terms, provided such traditional declaration gives accurate and adequate information as to the quantity of the commodity. Any net content statement that does not permit price and quantity comparisons is forbidden.
(Amended 1989)

6.4.1. Combination Declaration.

(a) A declaration of quantity in terms of weight shall be combined with appropriate declarations of the measure, count, and size of the individual units unless a declaration of weight alone is fully informative.

(b) A declaration of quantity in terms of measure shall be combined with appropriate declarations of the weight, count, and size of the individual units unless a declaration of measure alone is fully informative.

(c) A declaration of quantity in terms of count shall be combined with appropriate declarations of the weight, measure, and size of the individual units unless a declaration of count alone is fully informative.
(Added 1971)

6.5. SI Units: Mass, Measure. [NOTE 3] - A declaration of quantity:

(a) in units of mass shall be in terms of the kilogram, gram, or milligram;

(b) in units of liquid measure shall be in terms of the liter or milliliter, and shall express the volume at 20 °C, except in the case of petroleum products or distilled spirits, for which the declaration shall express the volume at 15.6 °C, and except also in the case of a commodity that is normally sold and consumed while frozen, for which the declaration shall express the volume at the frozen temperature, and except also in the case of malt beverages or a commodity that must be maintained in the refrigerated state, for which the declaration shall express the volume at 4 °C;
(Amended 1985, 1990)

(c) in units of linear measure shall be in terms of the meter, centimeter, or millimeter;

(d) in units of area measure, shall be in terms of the square meter, square decimeters, square centimeter, or square millimeter;

(e) in units of volume other than liquid measure, shall be in terms of the liter and milliliter, except that the terms cubic meter and cubic centimeter shall be used only when specifically designated as a method of sale;

(f) **Rule of 1000**. The selected multiple or submultiple prefixes for SI units shall result in numerical values between 1 and 1000. This rule allows centimeters or millimeters to be used where a length declaration is less than 100 centimeters. **For example:** 500 g not 0.5 kg; 1.96 kg not 1960 g; or 750 mL, not 0.75 L, or, 750 mm or 75 cm, not 0.75 m;
(Added 1993)

(g) SI declarations should be shown in three digits except where the quantity is below 100 grams, milliliters, centimeters, square centimeters, or cubic centimeters, where it can be shown in two digits. In either case, any final zero appearing to the right of the decimal point need not be shown.
(Added 1993)

(h) The declaration of net quantity of contents shall not be expressed in mixed units. **For example:** 1.5 kg, not 1 kg 500 g.
(Added 1993)

6.5.1. Symbols. - Any of the following symbols for SI units, none other, may be employed in the quantity statement on a package of commodity:

centimeter	cm	cubic meter	m^3
cubic centimeter	cm^3	kilogram	kg
meter	m	gram	g
milligram	mg	millimeter	mm
liter	L or l	square meter	m^2
milliliter	mL or ml	cubic decimeter	dm^3
square centimeter	cm^2	square decimeter	dm^2
micrometer	μm	microgram	μg

(a) Symbols [NOTE 4], except for liter, are not capitalized unless the unit is derived from a proper name. Periods shall not be used after the symbol. Symbols shall always be written in the singular form. Adding "s" to an SI symbol to express the plural of the symbol is prohibited.

(b) The "L" symbol and the "mL" symbol are preferred; however, the "l" symbol for liter and "ml" symbol for milliliter are permitted.
(Amended 1980, 1993)

NOTE 4: *The "e" mark shall not be considered to be a qualifying word or phrase and may be used as part of the statement of the net quantity of contents where warranted. When used, the "e" mark shall be at least 3 millimeters (approximately 1/8 in) in height. The term "e" mark refers to the symbol "e" used in connection with the quantity declarations on labels of some consumer commodities marketed primarily in the European Union (EU). The "e" mark constitutes a representation by the packer or importer that the package to which it is applied has been filled in accordance with the average system of quantity specified by the EU. The average system is a method of declaring package fill in the EU and other countries of the world, including the United States.*
(Added 1993)

6.5.2. Fractions and Prefixes.

(a) **Fractions:** An SI statement in a declaration of net quantity of contents of any consumer commodity may contain only decimal fractions.

(b) **Prefixes:** The following chart indicates SI prefixes that may be used on a broad range of consumer commodity labels to form multiples and submultiples of SI units:

Prefix	Symbol	Multiplying Factor*
kilo-	k	x 10^3
deca-**	da	x 10
deci-**	d	x 10^{-1}
centi-***	c	x 10^{-2}
milli-	m	x 10^{-3}
micro-****	μ	x 10^{-6}

* $10^2 = 100$; $10^3 = 1000$; $10^{-1} = 0.1$; $10^{-2} = 0.01$
Thus, 2 kg = 2 x 1000 g = 2000 g and
3 cm = 3 x 0.01 m = 0.03 m
** Not permitted on food labels.
*** Should only be used with "meter."
**** Shall only be used for measurements less than 1 mm.
(Amended 1993)

6.6. Prescribed Units, SI. - [NOTE 3]

6.6.1. Less than 1 Meter, 1 Square Meter, 1 Kilogram, 1 Cubic Meter, or 1 Liter. - The declaration of quantity shall be expressed as follows:

(a) length measure of less than 1 meter: in centimeters or millimeters;
(Amended 1979)

(b) area measure of less than 1 square meter: in square decimeters and decimal fractions of a square decimeter or in square centimeters and decimal fractions of a square centimeter;

(c) mass of less than 1 kilogram: in grams and decimal fractions of a gram, but if less than 1 gram, then in milligrams;

(d) liquid or dry measure of less than 1 liter: in milliliters;

(e) cubic measure less than 1 cubic meter: in cubic centimeters, or cubic decimeters (liters); [See § 10.14. Cubic Measure in Compressed Form.]
(Added 1993)

provided, the quantity declaration appearing on a random mass package may be expressed in terms of decimal fractions of the largest appropriate unit, the fraction being carried out to not more than three decimal places.
(Amended 1980, 1993)

6.6.2. One Meter, 1 Square Meter, 1 Kilogram, 1 Liter, 1 Cubic Meter, or More. - In the case of:

(a) length measure of 1 meter or more: in meters and decimal fractions to not more than three places;

(b) area measure of 1 square meter or more: in square meters and decimal fractions to not more than three places;

(c) mass of 1 kilogram or more: in kilograms and decimal fractions to not more than three places;

(d) liquid or dry measure of 1 liter or more: in liters and decimal fractions to not more than three places;
(Added 1986; Amended 1993)

(e) cubic measure of 1 cubic meter or more: in cubic meters and decimal fractions to not more than three places (see § 10.11. Cubic Measure in Compressed Form).
(Added 1993)

6.7. Inch-Pound Units: Weight, Measure. - A declaration of quantity:

(a) in units of weight, shall be in terms of the avoirdupois pound or ounce;

(b) in units of liquid measure, shall be in terms of the United States gallon of 231 cubic inches or liquid-quart, liquid-pint, or fluid-ounce subdivisions of the gallon, and shall express the volume at 68 °F except in the case of petroleum products and distilled spirits, for which the declaration shall express the volume at 60 °F, and except also in the case of a commodity that is normally sold and consumed while frozen, for which the declaration shall express the volume at the frozen temperature, and except also in the case of a commodity that must be maintained in the refrigerated state, for which the declaration shall express the volume at 40 °F, and except also in the case of malt beverages, for which the declaration shall express the volume at 39.1 °F;
(Amended 1985, 1990)

(c) in units of linear measure, shall be in terms of the yard, foot, or inch;

(d) in units of area measure, shall be in terms of the square yard, square foot, or square inch;

(e) in units of volume measure, shall be in terms of the cubic yard, cubic foot, or cubic inch; (see § 10.14. Cubic Measure in Compressed Form).

(f) in units of dry measure, shall be in terms of the United States bushel of 2,150.42 cubic inches, or peck, dry-quart, and dry-pint subdivisions of the bushel (see § 10.14. Cubic Measure in Compressed Form).

6.7.1. Symbols and Abbreviations. - Any of the following symbols and abbreviations, and none other, shall be employed in the quantity statement on a package of commodity:

avoirdupois	avdp	ounce	oz
piece	pc	count	ct
pint	pt	cubic	cu
pound	lb	each	ea
feet or foot	ft	quart	qt
fluid	fl	square	sq
gallon	gal	weight	wt
inch	in	yard	yd
liquid	liq	drained	dr
diameter	dia		

A period should not be used after the abbreviation. Abbreviations should be written in singular form; and "s" should not be added to express the plural. (For example,

"oz" is the symbol for both "ounce" and "ounces.") Both upper and lower case letters are acceptable.
(Added 1974; Amended 1980, 1990, 1993)

6.7.2. Units of Two or More Meanings. - When the term "ounce" is employed in a declaration of liquid quantity, the declaration shall identify the particular meaning of the term by the use of the term "fluid"; however, such distinction may be omitted when, by association of terms (for example, as in "1 pint 4 ounces"), the proper meaning is obvious. Whenever the declaration of quantity is in terms of the dry pint or dry quart, the declaration shall include the word "dry."
(Amended 1982)

6.8. Prescribed Units, Inch-Pound System.

6.8.1. Less than 1 Foot, 1 Square Foot, 1 Pound, or 1 Pint. – The declaration of quantity shall be expressed in terms of:

(a) in the case of length measure of less than 1 foot, in inches and fractions of inches;

(b) in the case of area measure of less than 1 square foot, in square inches and fractions of square inches;

(c) in the case of weight of less than 1 pound, in ounces and fractions of ounces;

(d) in the case of liquid measure of less than 1 pint, in fluid ounces and fractions of fluid ounces;

provided, the quantity declaration appearing on a random package may be expressed in terms of decimal fractions of the largest appropriate unit, the fraction being carried out to not more than three decimal places.

(Amended 1984)

6.8.2. 1 Foot, 1 Square Foot, 1 Pound, 1 Pint, 1 Gallon or More. - The declaration of quantity shall be expressed (see § 6.2. Largest Whole Unit and § 6.11. Fractions):

(a) **Linear Measure.** If 1 foot or more, expressed in terms the largest whole unit (a yard or a foot) with any remainder expressed in inches, and fractions of the inch, or in fractions of the foot or yard, except that it shall be optional to include a statement of length in terms of inches.

(b) **Area Measure.**

(i) If 1 square foot or more, but less than 4 square feet, expressed in square feet with any, remainder expressed in square inches and fractions of; a square inch or in fractions of a square foot;

(ii) If 4 square feet or more, expressed in terms of the largest whole unit (e.g., square yards or square feet), with any remainder expressed in square inches and fractions of a square inch, or in fractions of the square foot or square yard;

(c) **Weight.** If 1 pound or more, expressed in terms of the largest whole unit with any remainder expressed in ounces and fractions of an ounce or in fractions of the pound.

(d) **Liquid Volume.**

(i) If 1 pint or more, but less than 1 gallon, expressed in the largest whole unit (quarts, quarts and pints, or pints, as appropriate) with any remainder expressed in fluid ounces, or fractions of the pint or quart, except that 2 quarts may be declared as one-half gallon and it shall be optional to include an additional expression of net quantity in fluid ounces; or,

(ii) if 1 gallon or more, expressed in terms of the largest whole unit (gallons followed by fractions of a gallon, or by the next smaller whole unit or units, for example, quarts and pints) with any remainder expressed in fluid ounces, or fractions of the pint or quart, except that it shall be optional to include an additional expression of net quantity in fluid ounces.

(e) **Dry Measure.** If 1 dry pint or more, expressed in terms of the largest whole unit with the remainder expressed in fractions of a dry pint, dry quart, peck, or bushel,

provided, the quantity declaration on a random package may be expressed in decimal fractions of the largest appropriate unit, carried out to not more than three decimal places. (Amended 1993)

6.9. Bidimensional Commodities. - For bidimensional commodities (including roll-type commodities) the quantity declaration shall be expressed in both SI and inch-pound units of measurement as follows:

(a) if the area is less than 929 cm^2 (1 sq ft), in terms of length width (expressed in the largest whole unit for SI and in linear inches and fractions of linear inches for inch-pound) [**Example:** "20.3 cm x 25.4 cm (8 in x 10 in)"],

(b) if the area is at least 929 cm^2 (1 sq ft) but less than 37.1 dm^2 (4 sq ft), in terms of area (expressed in the largest whole unit for SI and in square inches for inch-pound), followed by a declaration of the length and width, in terms of the largest whole unit [**Example:** "31 dm 2 (49 cm x 64 cm) 3.36 sq ft (1.6 ft x 2.1 ft)"], *provided*:

(1) for bidimensional commodities having a width of 10 cm (4 in) or less, the declaration of net quantity shall be expressed in terms of width and length in linear measure; no declaration of area is required,

(2) an inch-pound dimension of less than 2 feet may be stated in inches,

(3) commodities consisting of usable individual units (e.g., paper napkins) require a declaration of unit area but not a declaration of total area of all such units (except roll-type commodities with individual usable units created by perforations, for which see § 6.10. Count: Ply), and

(4) for inch-pound declarations, it shall be optional to include, after the statement of the linear dimensions in the largest whole unit, a parenthetical declaration of the same dimensions in inches. [**Example:** "25 sq ft (12 in x 8.33 yd) (12 in x 300 in)"]

(c) if the area is 37.1 dm^2 (4 sq ft) or more, in terms of area (expressed in the largest whole unit for SI and in square feet for inch-pound), followed by a declaration of the length and width, in terms of the largest whole unit, *provided*:

(1) no declaration of area is required for a bidimensional commodity with a width of 10 cm (4 in) or less,

(2) for bidimensional commodities with a width of 10 cm (4 in) or less, the inch-pound statement of width shall be expressed in terms of linear inches and fractions thereof, and length shall be expressed in the largest whole unit (yard or foot) with any remainder in terms of fractions of the yard or foot, except that it shall be optional to express the length in the largest whole unit followed by a statement of length in inches or to express the length in inches followed by a statement of length in the largest whole unit. [**Examples:**

"5 cm x 9.14 m (2 in x 10 yd)," or
"5 cm x 9.14 m (2 in x 10 yd) (360 in)," or
"5 cm x 9.14 m (2 in x 360 in) (10 yd)"],

(3) an inch-pound dimension of less than 2 feet may be stated in inches, and

(d) no declaration of area is required for commodities for which the length and width measurements are critical in terms of end use (such as wallpaper border) if such commodities clearly present the length and width measurements on the label.

6.10. Count: Ply. - If the commodity is in individually usable units of one or more components or plies, the quantity declaration shall, in addition to complying with other applicable quantity declaration requirements of this regulation, include the number of plies and total number of usable units.

Roll-type commodities, when perforated so as to identify individual usable units, shall not be deemed to be made up of usable units; however, such roll-type commodities shall be labeled in terms of:

(a) total area measurement,

(b) number of plies,

(c) count of usable units, and

(d) dimensions of a single usable unit.
(Amended 1988)

6.11. Fractions

(a) **Inch-Pound:** An inch-pound statement of net quantity of contents of any consumer commodity may contain common or decimal fractions. A common fraction shall be in terms of halves, quarters, eighths, sixteenths, or thirty-seconds, except that:

(1) if there exists a firmly established general consumer usage and trade custom of employing different common fractions in the net quantity declaration of a particular commodity, they may be employed, and

(2) if linear measurements are required in terms of yards or feet, common fractions may be in terms of thirds.

(b) **Common fractions:** A common fraction shall be reduced to its lowest term. (**Example:** 2/4 becomes 1/2)

(c) **Decimal fractions:** A decimal fraction shall not be carried out to more than three places.
(Amended 1986, Amended 1993)

6.12. Supplementary Quantity Declarations. - The required quantity declaration may be supplemented by one or more declarations of weight, measure, or count, such declaration appearing other than on a principal display panel. Such supplemental statement of quantity of contents shall not include any term qualifying a unit of weight, measure, or count that tends to

exaggerate the amount of commodity contained in the package (e.g., "giant" quart, "larger" liter, "full" gallon, "when packed," "minimum," or words of similar import).

6.13. Rounding. [Note 5] - In all conversions for the purpose of showing an equivalent SI or inch-pound quantity to a rounded inch-pound or SI quantity, or in calculated values to be declared in the net quantity statement, the number of significant digits retained must be such that accuracy is neither sacrificed nor exaggerated. Conversions, the proper use of significant digits, and rounding must be based on the packer's knowledge of the accuracy of the original measurement that is being converted. In no case shall rounded net contents declarations overstate a quantity; the packer may round converted values down to avoid overstating the net contents. (Amended 1993)

NOTE 5: *When as a result of rounding SI or customary inch-pound declarations calculated based on the conversion factors in Appendix A, the resulting declarations are not exact, the largest number will be used for enforcement purposes to determine whether a package contains at least the declared amount of the product.*

6.14. Qualification of Declaration Prohibited. - In no case shall any declaration of quantity be qualified by the addition of the words "when packed," "minimum," or "not less than," or any words of similar import, nor shall any unit of weight, measure, or count be qualified by any term (such as "jumbo," "giant," "full," or the like) that tends to exaggerate the amount of commodity.

6.15. Character of Declaration: Average.

[NOT ADOPTED]

6.16. Random Packages. – A random weight package must bear a label conspicuously declaring:

(a) the net weight,

(b) unit price, and

(c) the total price.

In the case of a random package packed at one place for subsequent sale at another, neither the price per unit of weight nor the total selling price need appear on the package, *provided* the package label includes both such prices at the time it is offered or exposed for sale at retail.
(Added 1999)

Section 7. Declaration of Quantity: Nonconsumer Packages

7.1. General. - The SI and inch-pound systems of weights and measures are recognized as proper systems to be used in the declaration of quantity. Units of both systems may be combined in a dual declaration of quantity. [NOTE 6] (See § 6.3. Net Quantity and § 6.3.1. Use of "Net Mass" or "Net Weight.")

NOTE 6: *Although nonconsumer packages under this Regulation may bear SI declarations only, this Regulation should not be construed to supersede any labeling requirement specified in Federal law.*

7.2. Location. - A nonconsumer package shall bear on the outside a declaration of the net quantity of contents. Such declaration shall be in terms of the largest whole unit (see § 6.2. Largest Whole Unit; for small packages, see § 11.16. Small Packages).

7.3. Terms: Weight, Liquid Measure, Dry Measure, or Count. - The declaration of the quantity of a particular commodity shall be expressed in terms of liquid measure if the commodity is liquid, or in terms of dry measure if the commodity is dry, or in terms of weight if the commodity is solid, semisolid, viscous, or a mixture of solid and liquid, or in terms of numerical count. However, if there exists a firmly established general consumer usage and trade custom with respect to the terms used in expressing a declaration of quantity of a particular commodity, such declaration of quantity may be expressed in its traditional terms, if such traditional declaration gives accurate and adequate information as to the quantity of the commodity.

7.4. SI Units: Mass, Measure. - A declaration of quantity:

(a) in units of mass, shall be in terms of the kilogram, gram, or milligram;

(b) in units of liquid measure, shall be in terms of the liter or milliliter, and shall express the volume at 20 °C, except in the case of petroleum products or distilled spirits, for which the declaration shall express the volume at 15.6 °C, and except also in the case of a commodity that is normally sold and consumed while frozen, for which the declaration shall express the volume at the frozen temperature, and except also in the case of malt beverages or a commodity that is normally sold in the refrigerated state, for which the declaration shall express the volume at 4 °C;
(Amended 1985)

(c) in units of linear measure, shall be in terms of the meter, centimeter, or millimeter;

(d) in units of area measure, shall be in terms of the square meter, square decimeter, square centimeter or square millimeter;

(e) in units of volume other than liquid measure, shall be in terms of the liter and milliliter, except that the terms cubic meter, cubic decimeter and cubic centimeter will be used only when specifically designated as a method of sale.

(f) **Rule of 1000.** The selected multiple or submultiple prefixes for SI units shall result in numerical values between 1 and 1000. This rule allows centimeters or millimeters to be used where a length declaration is less than 100 centimeters. **For example:** 500 g not 0.5 kg; 1.96 kg not 1960 g; or 750 mL, not 0.75 L, or, 750 mm or 75 cm, not 0.75 m;
(Added 1993)

(g) SI declarations should be shown in three digits except where the quantity is below 100 grams, milliliters, centimeters, square centimeters, or cubic centimeters, where it can be shown in two digits. In either case, any final zero appearing to the right of the decimal point need not be shown.
(Added 1993)

(h) The declaration of net quantity of contents shall not be expressed in mixed units. **For example:** 1.5 kg, not 1 kg 500 g.

7.4.1. Symbols. - Only those symbols as detailed in § 6.5.1. Symbols, and none other, may be employed in the quantity statement on a package of commodity.

7.5. Inch-Pound Units: Weight, Measure. - A declaration of quantity:

(a) in units of weight, shall be in terms of the avoirdupois pound or ounce;

(b) in units of liquid measure, shall be in terms of the United States gallon of 231 cubic inches or liquid-quart, liquid-pint, or fluid-ounce subdivisions of the gallon, and shall express the volume at 68 °F except in the case of petroleum products or distilled spirits, for which the declaration shall express the volume at 60 °F, and except also in the case of a commodity that is normally sold and consumed while frozen, for which the declaration shall express the volume at the frozen temperature, and except also in the case of a commodity that is normally sold in the refrigerated state, for which the declaration shall express the volume at 40 °F, and except also in the case of malt beverages, for which the declaration shall express the volume at 39.1 °F;
(Amended 1985)

(c) in units of linear measure, shall be in terms of the yard, foot, or inch;

(d) in units of area measure, shall be in terms of the square yard, square foot, or square inch;

(e) in units of volume measure, shall be in terms of the cubic yard, cubic foot, or cubic inch;

(f) in units of dry measure, shall be in terms of the United States bushel of 2,150.42 cubic inches, or peck, dry-quart, and dry-pint subdivisions of the bushel.

7.5.1. Symbols and Abbreviations. - Any generally accepted symbol and abbreviation of a unit name may be employed in the quantity statement on a package of commodity. (For commonly accepted symbols and abbreviations, see § 6.7.1. Symbols and Abbreviations.)

7.6. Character of Declaration: Average.

[NOT ADOPTED]

Section 8. Prominence and Placement: Consumer Packages

8.1. General. - All information required to appear on a consumer package shall appear thereon in the English language and shall be prominent, definite, and plain, and shall be conspicuous as to size and style of letters and numbers and as to color of letters and numbers in contrast to color of background. Any required information that is either in hand lettering or hand script shall be entirely clear and equal to printing in legibility.

8.1.1. Location. - The declaration or declarations of quantity of the contents of a package shall appear in the bottom 30 percent of the principal display panel or panels. For cylindrical containers, see also § 10.7. for additional requirements. For small packages, see § 11.16.
(Amended 1975)

8.1.2. Style of Type or Lettering. - The declaration or declarations of quantity shall be in such a style of type or lettering as to be boldly, clearly, and conspicuously presented with respect to other type, lettering, or graphic material on the package, except that a declaration of net quantity blown, formed, or molded on a glass or plastic surface is permissible.

8.1.3. Color Contrast. - The declaration or declarations of quantity shall be in a color that contrasts conspicuously with its background, except that a declaration of net quantity blown, formed, or molded on a glass or plastic surface shall not be required to be presented in a contrasting color if no required label information is on the surface in a contrasting color.

8.1.4. Free Area. - The area surrounding the quantity declaration shall be free of printed information:

(a) above and below, by a space equal to at least the height of the lettering in the declaration, and

(b) to the left and right, by a space equal to twice the width of the letter "N" of the style and size of type used in the declaration.

8.1.5. Parallel Quantity Declaration. - The quantity declaration shall be presented in such a manner as to be generally parallel to the declaration of identity and to the base on which the package rests as it is designed to be displayed.

8.2. Calculation of Area of Principal Display Panel for Purposes of Type Size. - The area of the principal display panel shall be:

(a) in the case of a rectangular container, one entire side that properly can be considered to be the principal display panel, the product of the height times the width of that side;

For Figure 3, page QC-19, the area of the principal display panel is 20 cm (8 in) x 15 cm (6 in) = 300 cm^2 (48 sq in)

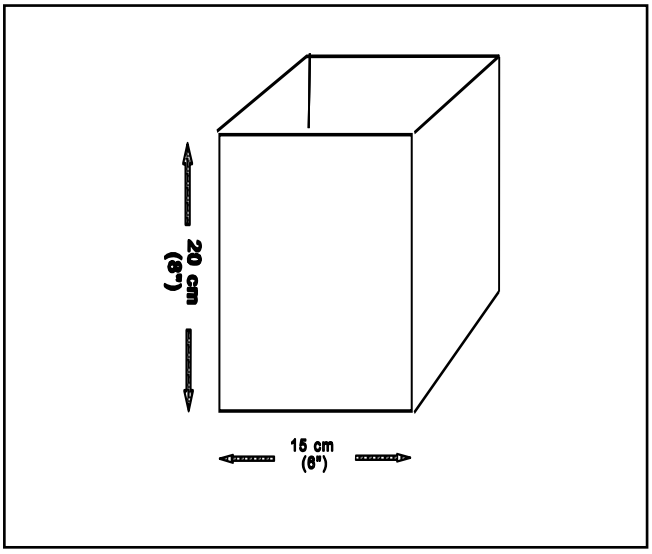

Figure 3.

(b) in the case of cylindrical or nearly cylindrical container, 40 % of the product of the height of the container times the circumference;

For Figure 4, page QC-20, the area of the principal display panel is: 25 cm (10 in) x 5 cm (2 in) = 125 cm (20 sq in) x 0.40 = 50 cm^2 (8 sq in). See also § 10.7. Cylindrical Containers.

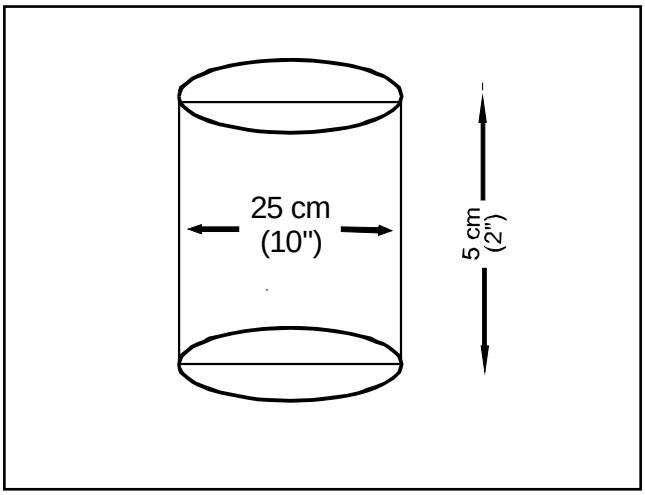

Figure 4.

For Figure 5, see page QC-20.
The area of the principal display panel is the same in both examples. The declaration of net quantity of contents must be of the same height in both cases. It is not the size of the label that is used to determine the minimum type size of the quantity statement, but the size of the surface of the package exposed to view to the customer. The package on the right side of the figure has a spot label; see § 2.12. and § 11.29.

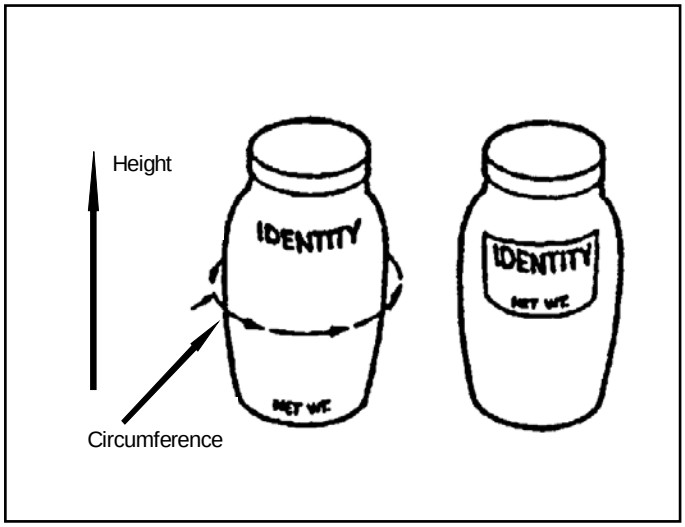

Figure 5.

(c) in the case of any other shaped container, 40 % of the total surface of the container, unless such container presents an obvious principal display panel (e.g., the top of a triangular or circular package of cheese, or the top of a can of shoe polish), in which event the area shall consist of the entire such surface.

Determination of the principal display panel shall exclude tops, bottoms, flanges at tops and bottoms of cans, and shoulders and necks of bottles or jars.

8.2.1. Minimum Height of Numbers and Letters. - The height of any letter or number in the required quantity declaration shall be not less than that shown in Table 1 on page QC-21, with respect to the area of the panel, and the height of each number of a common fraction shall meet one-half the minimum height standards. When upper and lower case, or all lowercase letters are used in SI symbols, it is the uppercase "L," lowercase "d," or their equivalent in the print or type that shall meet the minimum height requirement. However, no letter shall be less than 1.6 mm (1/16 in) in height. Other letters and exponents must be presented in the same type style and in proportion to the type size used.
(Amended 1993)

8.2.2. Numbers and Letters: Proportion. - No number or letter shall be more than three times as high as it is wide.

Table 1. Minimum Height of Numbers and Letters		
Area of principal display panel	**Minimum height of numbers and letters**	**Minimum height: label information blown, formed, or molded on surface on container**
≤ 32 cm^2 (5 sq in)	1.6 mm (1/16 in)	3.2 mm (1/8 in)
> 32 cm^2 (5 sq in) ≤ 161 cm^2 (25 sq in)	3.2 mm (1/8 in)	4.8 mm (3/16 in)
> 161 cm^2 (25 sq in) ≤ 645 cm^2 (100 sq in)	4.8 mm (3/16 in)	6.4 mm (1/4 in)
> 645 cm^2 (100 sq in) ≤ 2581 cm^2 (400 sq in)	6.4 mm (1/4 in)	7.9 mm (5/16 in)
> 2581 cm^2 (400 sq in)	12.7 mm (1/2 in)	14.3 mm (9/16 in)
Symbols: ≤ means less than or equal to; < means less than; > means greater than **Note:** The type size requirements specified in this table do not apply to the "e" mark. See Note 4 on page QC-12.		

Section 9. Prominence and Placement: Nonconsumer Packages

9.1. General. - All information required to appear on a nonconsumer package shall be definitely and clearly stated thereon in the English language. Any required information that is either in hand lettering or hand script shall be entirely clear and equal to printing in legibility.

Section 10. Requirements: Specific Consumer Commodities, Nonconsumer Commodities, X. Packages, Containers

(Title amended 1979)

10.1. Display Card Package. - For an individual package affixed to a display card, or for a commodity and display card together comprising a package, the type size of the quantity declaration is governed by the dimensions of the display card.

10.2. Eggs. - When cartons containing 12 eggs have been designed so as to permit division in half by the retail purchaser, the required quantity declaration shall be so positioned as to have its context destroyed when the carton is divided.

10.3. Aerosols and Similar Pressurized Containers. - The declaration of quantity on an aerosol package, and on a similar pressurized package, shall disclose the net quantity of the commodity (including propellant), in terms of weight, that will be expelled when the instructions for use as shown on the container are followed.

10.4. Multi-Unit Packages. [NOTE 7, see page QC-22] - Any package containing more than one individual "commodity in package form" (see § 2.1. Package) of the same commodity shall bear on the outside of the package a declaration of:

(a) the number of individual units,

(b) the quantity of each individual unit, and

(c) the total quantity of the contents of the multi-unit package. [**Example:** Soap bars, "6 Bars, Net Wt 100 g (3.53 oz) each; Total Net Wt 600 g (1.32 lb)".]

The term "total" or the phrase "total contents" may precede the quantity declaration.

A multi-unit package containing unlabeled individual packages which are not intended for retail sale separate from the multi-unit package may contain, in lieu of the requirements of section (a), a declaration of quantity of contents expressing the total quantity of the multi-unit package without regard for inner packaging. For such multi-unit packages it shall be optional to include a statement of the number of individual packages when such a statement is not otherwise required by the regulations.

Examples:

Deodorant Cakes: "5 Cakes, Net Wt 113 g (4 oz) each, Total Net Wt 566 g (1.25 lb)" or "5 Cakes, Total Net Wt 566 g (1 lb 4 oz)"

Soap Packets: "10 Packets, Net Wt 56.6 g (2 oz) each, Total Net Wt 566 g (1.25 lb)" or "Net Wt 566 g (1 lb 4 oz)" or "10 Packets, Total Net Wt 566 g (1 lb 4 oz)"
(Amended 1993)

NOTE 7: *For foods, a "multi-unit" package means a package containing two or more individually packaged units of the identical commodity in the same quantity, intended to be sold as part of the multi-unit package but labeled to be individually sold in full compliance with this regulation. Open multi-unit retail food packages under the authority of the Food and Drug Administration or the U.S. Department of Agriculture that do not obscure the number of units or prevent examination of the labeling on each of the individual units are not required to declare the number of individual units or the total quantity of contents of the multi-unit package, if the labeling of each individual unit complies with requirements so that it is capable of being sold individually. (See also § 11.11. Soft-Drink Bottles and 11.12. Multi-Unit Soft-Drink Bottles.)*
(Added 1984)

10.5. Combination Packages. - A combination package is a package intended for retail sale, containing two or more individual packages or units of dissimilar commodities. The declaration of net quantity for a combination package shall contain an expression of weight, volume, measure, or count or a combination thereof, as appropriate, for each individual package or unit, *provided* the quantity statements for identical packages or units shall be combined. This section does not apply to food or other commodities subject to the Federal Food, Drug, and Cosmetic Act (21 USC).

Examples:

(1) Lighter Fluid and Flints:

2 cans - lighter fluid - each 236 mL (8 fl oz)
1 package - 8 flints

(2) Sponges and Cleaner:

2 sponges - each 10 cm x 15 cm x 2.5 cm
(4 in x 6 in x 1 in)
1 box cleaner - Net Mass 170 g (6 oz)

(3) Picnic Pack:

20 spoons, 10 knives, and 10 forks
10 2-ply napkins 25 cm x 25 cm (10 in x 10 in)
10 cups - 177 mL (6 fl oz)
(Amended 1993)

10.6. Variety Packages. - A variety package is a package intended for retail sale, containing two or more individual packages or units of similar but not identical commodities. Commodities that are generically the same but that differ in weight, measure, volume, appearance, or quality are considered similar but not identical. This section does not apply to foods or other commodities subject to the Federal Food, Drug, and Cosmetic Act (21 USC). The declaration of net quantity for a variety package will be expressed as follows:

(1) The number of units for each identical commodity followed by the weight, volume, or measure of that commodity;

(2) The total quantity by weight, volume, measure, and count, as appropriate, of the variety package. The statement of total quantity shall appear as the last item in the declaration of net quantity and shall not be of greater prominence than other terms used.

Examples:

(1) 11 Sponges 11 cm x 20.3 cm x 1.9 cm (4 in x 8 in x 3/4 in)
14 Sponges 5.7 cm x 10 cm x 1.2 cm (2 1/4 in x 4 in x 1/2 in)

Total: 25 Sponges

(2) 2 Soap Bars 85 g (3 oz) ea
1 Soap Bar 142 g (5 oz)

Total: 3 Soap Bars 312 g (11 oz)

(3) Liquid Shoe Polish
1 Brown 89 mL (3 fl oz)
1 Black 89 mL (3 fl oz)
1 White 148 mL (5 fl oz)

Total: 326 mL (11 fl oz)

(4) Picnic Ware
34 spoons
33 forks
33 knives

Total: 100 pieces

(Amended 1993)

When individual units in a variety package are either packaged or labeled, and are intended for retail sale as individual units, each unit shall be labeled in compliance with the applicable sections of this regulation.

10.7. Cylindrical Containers. - In the case of cylindrical or nearly cylindrical containers, information required to appear on the principal display panel shall appear within that 40 percent of the circumference which is most likely to be displayed, presented, shown, or examined under customary conditions of display for retail sale.

10.8. Measurement of Container-Type Commodities, How Expressed.

10.8.1. General. - Commodities designated and sold at retail to be used as containers for other materials or objects, such as bags, cups, boxes, and pans, shall be labeled with the declaration of net quantity as follows:

(a) For bag-type commodities, in terms of count followed by linear dimensions of the bag (whether packaged in a perforated roll or otherwise). The linear dimensions shall be expressed:

(1) in SI units: in millimeters or centimeters, except that a dimension of 1 meter or more will be expressed in meters with the remainder in terms of decimal fractions of the meter; and

(2) in inch-pound units: in inches, except that a dimension of 2 feet or more will be expressed in feet with any remainder in terms of inches or common or decimal fractions of the foot.

(b) When the unit bag is characterized by two dimensions because of the absence of a gusset, the width and length will be stated. [**Examples:** "25 bags, 12.7 cm x 10 cm (5 in x 4 in)" or "50 bags, 75 cm x 1.2 m (2.5 ft x 3.9 ft)".]

(c) When the unit bag is gusseted, the dimensions will be expressed as width, depth, and length. [**Examples:** "25 Bags, 43 cm x 10 cm x 50 cm (17 in x 4 in x 20 in)" or "100 Bags, 50.8 cm x 30.4 cm x 76.2 cm (20 in x 12 in x 2-1/2 ft)".]

(d) For other square, oblong, rectangular, or similarly shaped containers, in terms of count followed by length, width, and depth, except depth need not be listed when less than 5 centimeters or 2 inches. The linear dimensions shall be expressed as specified in § 10.8.1.(a). For bag-type commodities [**Example:** "2 pans, 20 cm x 20 cm (8 in x 8 in)"].

(e) For circular or other generally round-shaped containers, except cups and the like, in terms of count followed by diameter and depth, except depth need not be listed when less than 5 centimeters or 2 inches. [**Example:** "4 pans, 20 cm (8 in) diameter x 10 cm (4 in)".]

(f) Cups - Notwithstanding the above requirements, the net quantity statement for containers such as cups will be listed in terms of count and liquid capacity per unit. [**Example:** "24 Cups, 177 mL (6 fl oz) capacity".]

10.8.2. Capacity. - When the functional use of the container is related by label references in standard terms of measure to the capability of holding a specific quantity of substance or class of substances such references shall be a part of the net quantity statement and shall specify capacity as follows:

(a) In SI units: in terms of volume for all containers and liners. The expressed capacity will be stated in terms of milliliters, except that a quantity of 1 liter or more shall be expressed in liters with the remainder in terms of decimal fractions of the liter; and

(b) In inch-pound units:

(1) In terms of liquid measure for containers that are intended to be used for liquids, semi-solids, viscous materials, or mixtures of solids and liquids. The expressed capacity will be stated in terms of the largest whole unit (gallon, quart, pint, fluid ounce) with any remainder in terms of common or decimal fractions of that unit. [**Example:** Freezer Boxes – "4 Boxes, 946 mL capacity, 15 cm x 15 cm x 10 cm (1 qt capacity, 6 in x 6 in x 4 in)".]

(2) In terms of dry measure for containers that are intended to be used for solids. The expressed capacity will be stated in terms of the largest whole unit (bushel, peck) with any remainder in terms of common or decimal fractions of that unit. [**Example:** Leaf Bags – "8 bags, 211 L capacity, 1.21 m x 1.52 m (6 bu capacity, 4 ft x 5 ft)".]

(3) Where containers are used as liners for other more permanent containers, in the same terms as are normally used to express the capacity of the more permanent containers. [**Example:** Garbage Can Liners – "10 Liners, 76.2 cm x 93.9 cm, fits up to 113 L cans (2 ft 6 in x 3 ft 1 in, fits up to 30 gal cans)".]

10.8.3. Terms. - For purposes of this section, the use of the terms "capacity," "diameter," and "fluid" is optional.

10.9. Textile Products, Threads, and Yarns.

10.9.1. Wearing Apparel. - Wearing apparel (including nontextile apparel and accessories such as leather goods and footwear) sold as single-unit items, or if normally sold in pairs (such as hosiery, gloves, and shoes) sold as single-unit pairs, shall be exempt from the requirements for a net quantity statement by count, as required by § 6.4. Terms: Weight, Liquid Measure, Dry Measure, or Count, of this regulation.

10.9.2. Textiles. - Bedsheets, blankets, pillowcases, comforters, quilts, bedspreads, mattress covers and pads, afghans, throws, dresser and other furniture scarfs, table-cloths and napkins, flags, curtains, drapes, dishtowels, dishcloths, towels, face cloths, utility cloths, bath mats, carpets and rugs, pot holders, fixture and appliance covers, non-rectangular diapers, slip covers, etc., shall be exempt from the requirements of § 6.9. Bidimensional Commodities, of this regulation, *provided*:

(a) The quantity statement for fitted sheets and mattress covers shall state, in centimeters and inches, the length and width of the mattress for which the item is designed, and the size designation of the mattress, if the item is intended to fit a mattress identified as "twin," "double," "queen," "king," "California king," etc. [**Example:** "Double sheet for 137 cm x 190 cm (54 in x 75 in) mattress".]
(Amended 1987)

(b) The quantity statement for flat sheets shall state, in centimeters and inches, the length and width of the mattress for which the sheet is designed, followed in parentheses by a statement, in centimeters and inches, of the length and width of the finished sheet. The quantity statement shall also state the size designation of the mattress for which the sheet is designed, such as "twin," "double," "queen," "king," "California king," if the item is intended to fit such a mattress. [**Example:** "Twin Flat Sheet for 99 cm x 190 cm (39 in x 75 in) mattress 167 cm x 244 cm (66 in x 96 in) finished size".]
(Amended 1987)

(c) The quantity statement for pillowcases shall state, in centimeters and inches, the length and width of the pillow for which the pillowcase is designed, followed in parentheses by a statement, in centimeters and inches of the length and width of the finished pillow-case. The quantity statement for pillowcases shall also state the size designation of the pillow for which the pillowcase is designed, e.g., "youth," "standard," "queen," etc., if the item is intended to fit such pillows. [**Example:** "Standard Pillowcase for 51 cm x 66 cm (20 in x 26 in) pillow, 51 cm x 76 cm (20 in x 30 in) in finished size".]
(Amended 1977, 1987)

(d) The quantity statement for blankets, comforters, quilts, bedspreads, mattress pads, afghans, and throws shall state, in centimeters and inches, the length and width of the finished item. The quantity statement shall also state the length of any ornamentation and the size designation of the mattress for which the item is designed, if it is intended to fit, for example, a "twin," "double," "queen," "king," or "California King," etc., mattress.
(Amended 1988)

(e) The quantity statement for tablecloths and napkins shall state, in centimeters and inches, the length and width of the finished item. The quantity statement also may state parenthetically, in centimeters and inches, the length and width of the item before hemming and properly identified as such.

(f) The quantity statement for curtains, drapes, flags, furniture scarfs, etc., shall state, in centimeters and inches, the length and width of the finished item. The quantity statement also may state parenthetically, in centimeters and inches, the length of any ornamentation.

(g) The quantity statement for carpets and rugs shall state, in meters and feet, with any remainder in decimal fractions of the meter for SI sizes or common or decimal fractions of the foot or in inches for inch-pound sizes, the length and width of the item. The quantity statement also may state parenthetically, in centimeters and inches, the length of any ornamentation.

(h) The quantity statement for woven dish towels, dish cloths, towels, face cloths, utility cloths, bath mats, etc., shall state, in centimeters and inches, the length and width of the item. The quantity statement for such items, when knitted, need not state the dimensions.

(i) The quantity statement for textile products such as pot holders, fixture and appliance covers, slip covers, nonrectangular diapers, etc., shall be stated in terms of count and may include size designations and dimensions.

(j) The quantity statement for other than rectangular textile products identified in section (a) through (h) shall state the geometric shape of the product and the dimensions that are customarily used in describing such geometric shape. (**Examples:** "Round scarf: 190 cm (74 in) in diameter;" "Oval Tablecloth 177 cm x 254 cm (70 in x 100 in)" representing the maximum length and width in this case.)

(k) The quantity statement for packages of remnants of textile products of assorted sizes, when sold by count, shall be accompanied by the term "irregular dimensions" and the minimum size of such remnants.
(Added 1971)

10.9.3. Sewing Threads, Handicraft Threads, and Yarns. - Sewing and handicraft threads shall be labeled as follows:

(a) The net quantity statement for sewing and handicraft threads shall be expressed in terms of meters and yards.

(b) The net quantity statement for yarns shall be expressed in terms of mass or weight.

(c) Thread products may, in lieu of name and address, bear a trademark, symbol, brand, or other mark that positively identifies the manufacturer, packer, or distributor, provided such marks, employed to identify the vendor, shall be filed with the director.

(d) Each unit of industrial thread shall be marked to show its net length in terms of meters and yards or its net weight in terms of kilograms or grams and avoirdupois pounds or ounces, except that ready-wound bobbins that are not sold separately shall not be required to be individually marked to show the number of bobbins contained therein and the net meters and yards of thread on each bobbin.

10.10. Packaged Seed. - Packages of seeds intended for planting, weighing less than 225 grams or 8 ounces, shall be labeled in full accord with this regulation except as follows:

(a) The quantity statement shall appear in the upper 30 percent of the principal display panel.

(b) The quantity statement shall be in terms of:

(1) the largest whole SI unit for all packages with weights up to 7 grams, and

(2) in grams and ounces for all other packages with weights less than 225 grams or 8 ounces.
(Amended 1995)

(c) The quantity statement for coated seed, encapsulated seed, pelletized seed, preplanters, seed tapes, etc., shall be in terms of count.
(Added 1972; Amended 1975, 1993)

10.11. Statements of Cubic Measure in Compressed Form. When the content declaration on a commodity sold in compressed form is stated in terms of cubic measure, an additional statement may indicate the amount of material from which the final product was compressed. The amount in such statement shall not exceed the actual amount of material that can be recovered.
(Added 1993)

Section 11. Exemptions [Note 8]

NOTE 8: *Section 11. Exemptions includes several requirements that refer only to the historic use of inch-pound units or are direct restatements of exemptions contained in Federal Laws or regulations which do not include SI units. SI equivalents are omitted in most of these requirements because the SI units would not be meaningful or useful.*
(Added 1993) (Amended 1995)

11.1. Random Packages. - A random package bearing a label conspicuously declaring:

(a) the net weight,
(b) unit price, and
(c) the total price

shall be exempt from the SI units, type size, location, and free area requirements of this regulation. In the case of a random package packed at one place for subsequent sale at another, neither the price per unit of weight nor the total selling price need appear on the package, *provided* the package label includes both such prices at the time it is offered or exposed for sale at retail.

This section shall also apply to uniform weight packages of fresh fruit or vegetables labeled by count, in the same manner and by the same type of equipment as random packages exempted by this section, and cheese and cheese products labeled in the same manner and by the same type of equipment as random packages exempted by this section.
(Amended 1989)

11.1.1 Indirect Sale of Random Packages. - A random package manufactured or produced and offered for indirect sale (e.g., e-commerce, on-line, phone, fax, catalog, and similar methods) shall be exempt from the labeling requirements of:

(a) unit price
(b) total price

when the following requirements are met:

At the time of the delivery, each package need only bear a statement of net weight, provided that:

(a) The unit price is set forth and established in the initial product offering;

(b) The maximum possible net weight, unit price, and maximum possible price are provided to the customer by order confirmation when the product is ordered; and

(c) When the product is delivered, the customer receives a receipt bearing the following information: identity, declared net weight, unit price, and the total price.

Indirect Sales: For the purpose of Section 11.1.1., "Indirect sales" include all forms of sales where the customer is not physically present at the time and location of product selection and order. Examples of such indirect methods include, without limitation, Internet or on-line sales, sales conducted by telephone or facsimile, and catalog sales.
(Added 2001)

11.2. Small Confections. - Individually wrapped pieces of "penny candy" and other confectionery of less than 15 grams or 1/2 ounce net weight per individual piece shall be exempt from the labeling requirements of this regulation when the container in which such confectionery is shipped is in conformance with the labeling requirements of this regulation. Similarly, when such confectionery items are sold in bags or boxes, such items shall be exempt from the labeling requirements of this regulation, including the required declaration of net quantity of contents, when the declaration of the bag or box meets the requirements of this regulation.

11.3. Small Packages of Meat or Meat Products. - Individually wrapped and labeled packages of meat or meat products of less than 15 grams or 1/2 ounce net weight, which are in a shipping container, need not bear a statement of the net quantity of contents when the statement of the net quantity of contents on the shipping container is in conformance with the labeling requirements of this regulation.
(Added 1987)

11.4. Individual Servings. - Individual serving-size packages of foods containing less than 15 grams or 1/2 ounce or less than 15 milliliters or 1/2 fluid ounce for use in restaurants, institutions, and passenger carriers, and not intended for sale at retail, shall be exempt from the required declaration of net quantity of contents specified in this regulation.

11.5. Cuts, Plugs, and Twists of Tobacco and Cigars. - When individual cuts, plugs, and twists of tobacco and individual cigars are shipped or delivered in containers that conform to the labeling requirements of this regulation, such individual cuts, plugs, and twists of tobacco and cigars shall be exempt from such labeling requirements.

11.6. Reusable (Returnable) Glass Containers. - Nothing in this Regulation shall be deemed to preclude the continued use of reusable (returnable) glass containers, *provided* such glass containers ordered after the effective date of this regulation shall conform to all requirements of this regulation.

11.7. Cigarettes and Small Cigars. - Cartons of cigarettes and small cigars, containing ten individual packages of twenty, labeled in accordance with the requirements of this regulation, shall be exempt from the requirements set forth in § 8.1.1. Location, § 8.2.1. Minimum Height of Numbers and Letters, and § 10.4. Multi-Unit Packages, *provided* such cartons bear a declaration of the net quantity of commodity in the package.

11.8. Packaged Commodities with Labeling Requirements Specified in Federal Law. - Packages of meat and meat products, poultry products, tobacco and tobacco products, pesticides, and alcoholic beverages shall be exempt from those portions of these regulations specifying location and minimum type size of the net quantity declaration, *provided* quantity labeling requirements for such products are specified in Federal law, so as to follow reasonably sound principles of providing consumer information. (See also § 11.32. SI Units, Exemptions-Consumer Commodities.)

11.9. Fluid Dairy Products, Ice Cream, and Similar Frozen Desserts.

(a) When packaged in 1/2-liquid-pint and 1/2-gallon containers, are exempt from the requirements for stating net contents of 8 fluid ounces and 64 fluid ounces, which may be expressed as 12 pint and 12 gallon, respectively.

(b) When measured by and packaged in measure containers as defined in "Measure Container Code of National Institute of Standards and Technology Handbook 44," are exempt from the requirements of § 8.1.1. Location, that the declaration of net contents be located within the bottom 30 percent of the principal display panel.

(c) Milk and milk products when measured by and packaged in glass or plastic containers of 1/2-pint, 1-pint, 1-quart, 1/2-gallon, and 1-gallon capacities are exempt from the placement requirement of § 8.1.1. Location, that the declaration of net contents be located within the bottom 30 % of the principal display panel, *provided* other required label information is conspicuously displayed on the cap or outside closure, and the required net quantity of contents declaration is conspicuously blown, formed, or molded on, or permanently applied to that part of the glass or plastic container that is at or above the shoulder of the container.
(Amended 1993)

11.10. Single Strength and Less than Single Strength Fruit Juice Beverages, Imitations Thereof, and Drinking Water.

(a) When packaged in glass, plastic, or fluid milk type paper containers of 8- and 64-fluid-ounce capacity, are exempt from the requirements of § 6.2. Largest Whole Unit, to the extent that net contents of 8 fluid ounces and 64 fluid ounces (or 2 quarts) may be expressed as 1/2 pint (or half pint) and 1/2 gallon (or half gallon), respectively.

(b) When packaged in glass or plastic containers of 1/2 pint, 1-pint, 1-quart, 1/2-gallon, and 1-gallon capacities, are exempt from the placement requirements of § 8.1.1. Location, that the declaration of net contents be located within the bottom 30 % of the principal display panel, *provided* other label information is conspicuously displayed on the cap or outside closure and the required net quantity of contents declaration is conspicuously blown, formed, or molded into or permanently applied to that part of the glass or plastic container that is at or above the shoulder of the container.
(Amended 1993)

11.11. Soft-Drink Bottles. - Bottles of soft drinks shall be exempt from the placement requirements for the declaration of:

(a) identity, when such declaration appears on the bottle closure, and

(b) quantity, when such declaration is blown, formed, or molded on or above the shoulder of the container and when all other information required by this regulation appears only on the bottle closure.

11.12. Multi-Unit Soft-Drink Packages. - Multi-unit packages of soft drinks are exempt from the requirement for a declaration of:

(a) responsibility, when such declaration appears on the individual units and is not obscured by the multi-unit packaging, or when the outside container bears a statement to the effect that such declaration will be found on the individual units inside, and

(b) identity, when such declaration appears on the individual units and is not obscured by the multi-unit packaging.

11.13. Butter. - When packaged in 4-ounce, 8-ounce, and 1-pound packages with continuous label copy wrapping, butter is exempt from the requirements that the statement of identity (§ 3.1.1. Parallel Identity Declaration: Consumer Package) and the net quantity declaration (§ 8.1.5. Parallel Quantity Declaration) be generally parallel to the base of the package. When packaged in 8-ounce and 1-pound units, butter is exempt from the requirement for location (§ 8.1.1.) of net quantity declaration.
(Amended 1980, 1993)

11.14. Eggs. - Cartons containing 12 eggs shall be exempt from the requirement for location (§ 8.1.1.) of net quantity declaration. When such cartons are designed to permit division in half, each half shall be exempt from the labeling requirements of this regulation if the undivided carton conforms to all such requirements.

11.15. Flour. - Packages of wheat flour in conventional 2-, 5-, 10-, 25-, 50-, and 100-pound packages shall be exempt from the requirement in this regulation for location (§ 8.1.1.) of the net quantity declaration.
(Amended 1980, 1993)

11.16. Small Packages. - On a principal display panel of 32 square centimeters (5 sq in) or less, the declaration of quantity need not appear in the bottom 30 percent of the principal display panel if that declaration satisfies the other requirements of this regulation.
(Amended 1980)

11.17. Decorative Containers. - The principal display panel of a cosmetic marketed in a "boudoir-type" container including decorative cosmetic containers of the "cartridge," "pill box," "compact," or "pencil" variety, and those with a capacity of 7.4 mL (1/4 oz) or less, may be a tear-away tag or tape affixed to the decorative container and bearing the mandatory label information as required by this regulation.
(Amended 1980)

11.18. Combination and Variety Packages. - Combination and variety packages are exempt from the requirements in this regulation for:

(a) Location (see § 8.1.1.),

(b) Free area (see § 8.1.4.), and

(c) Minimum height of numbers and letters (see § 8.2.1.). (Amended 1989)

11.19. Margarine. - Margarine in 1-pound rectangular pack-ages, except for packages containing whipped or soft margarine or packages containing more than four sticks, shall be exempt from the requirement in this regulation for location (see § 8.1.1.) of the net quantity declaration.
(Amended 1980, 1993)

11.20. Corn Flour and Corn Meal. - Corn flour and corn meal packaged in conventional 5-, 10-, 25-, 50-, and 100-pound bags shall be exempt from the requirement in this regulation for location (see § 8.1.1.) of the net quantity declaration.
(Amended 1978, 1980)

11.21. Prescription and Insulin-Containing Drugs. - Prescription and insulin-containing drugs subject to the provisions of § 503(b) (1) or 506 of the Federal Food, Drug, and Cosmetic Act shall be exempt from the provisions of this regulation.

11.22. Camera Film, Video Recording Tape, Audio Recording Tape and Other Image and Audio Recording Media Intended for Retail Sale and Consumer Use. - Image and audio media packaged and labeled for retail sale are exempt from the net quantity statement requirements of this regulation that specify how measurement of commodities should be expressed, *provided*:

(a) Unexposed or Unrecorded Media. - The net quantity of contents of unexposed or unrecorded image and audio media is expressed:

(1) For still film, tape, or other still image media, in terms of the usable or guaranteed number of available still image exposures. The length and width measurements of the individual exposures, expressed in millimeters or inches, are authorized as an optional statement. (**Example,** "36 exposures, 36 mm x 24 mm" or "12 exposures, 2-1/4 in x 2-1/4 in").

(2) For bulk or movie film, in terms of length (in meters or feet) of film available for exposure.

(3) For all other image and/or audio media, in terms of length of time of electronic media available for recording, together with recording and/or playing speed or other machine settings as necessary. Supplemental information concerning the length of the media **[NOTE 9]** may be provided.

Supplemental information may be provided on other than the principal display panel.

NOTE 9: *Size, length of media, and format details to ensure interchangeability and other characteristics of audio and imaging media are available in the applicable American National Standards.*

(b) Exposed, Recorded, or Processed Media. - The net quantity of contents of exposed or processed film or prerecorded electronic media shall be expressed in terms of the length of time that is of entertainment value.

"Entertainment value" is defined as that portion of a film, tape, or other media, that commences with the first frame of sound or picture, whichever comes first after the countdown sequence (if any), and ends with either: (a) the last frame of credits; or (b) the last frame of the phrase "The End," or (c) the end of sound, whichever is last.
(Amended 1990)

11.23. Tint Base Paint. - Tint base paint may be labeled on the principal display panel, in terms of a liter, quart or a gallon including the addition of colorant selected by the purchaser, provided the system employed ensures that the purchaser always obtains a liter, quart or a gallon; and further, provided in conjunction with the required quantity statement on the principal display panel, a statement indicating that the tint base paint is not to be sold without the addition of colorant is presented; and further provided the contents of the container, before the addition of colorant, is stated in fluid ounces elsewhere on the label.

Wherever the above conditions cannot be met, containers of tint base paint must be labeled with a statement of the actual net contents prior to the addition of colorant in full accord with all the requirements of this regulation.
(Added 1972; Amended 1980, 1993)

11.24. Motor Oil In Cans. - Motor oils, when packed in cans bearing the principal display panel on the body of the container, are exempt from the requirements of § 3. Declaration of Identity: Consumer Package, to the extent that the Society of Automotive Engineers (SAE) viscosity number is required to appear on the principal display panel, provided the SAE viscosity number appears on the can lid and is expressed in letters and numerals in type size of at least 6 mm or 1/4 in.
(Amended 1974, 1980, 1993)

11.25. Pillows, Cushions, Comforters, Mattress Pads, Sleeping Bags, and Similar Products. - Those products, including pillows, cushions, comforters, mattress pads, and sleeping bags, that bear a permanent label as designated by the Association of Bedding and Furniture Law Officials or by the California Bureau of Home Furnishings shall be exempt from the requirements for location (§ 8.1.1.), size of letters or numbers (§ 8.2.1. and 8.2.2.), free area (§ 8.1.4.), and the declarations of identity and responsibility (§ 3.1. and 5.), *provided* declarations of identity, quantity, and responsibility are presented on a permanently attached label and satisfy the other requirements of this Regulation, and further, *provided* the information on such permanently attached label be fully observable to the purchaser.
(Added 1973)

11.26. Commodities' Variable Weights and Sizes. - Individual packaged commodities put up in variable weights and sizes for sale intact, and intended to be weighed and marked with the correct quantity statement prior to or at the point of retail sale, are exempt from the requirements of § 6. Declaration of Quantity: Consumer Packages, while moving in commerce and while held for sale prior to weighing and marking, *provided* the outside container bears a label declaration of the total net weight.
(Added 1973)

11.27. Packaged Commodities Sold by Count. [NOTE 10] - When a packaged consumer commodity is properly measured in terms of count only, or in terms of count and some other appropriate unit, and the individual units are fully visible to the purchaser, such packages shall be labeled in full accord with this Regulation except that those containing six or less items need not include a statement of count.
(Added 1973)

NOTE 10: *When the net contents declaration of a package that may enter interstate commerce includes count, Federal regulations under the Federal Fair Packaging and Labeling Act provide no exemption from declaring the count unless the count is one (1).*
(Added 1990)

11.28. Textile Packages. - Packages of textiles that are required by § 6.4.1. to provide a combination declaration stating the quantity of each individual unit and the count shall be exempt from the requirements in this regulation for:

(a) Location (see § 8.1.1.),

(b) Free area (see § 8.1.4.), and

(c) Minimum height of numbers and letters (see § 8.2.1.).
(Added 1971; Amended 1989)

11.29. Spot Label. - The declaration of quantity of the contents of a package is exempt from § 8.1.1. Location, requiring the quantity declaration to appear in the bottom 30 % of the principal display panel, as long as the declaration of quantity appears in the lower 30 % of the spot label. In no case may the size of the spot label be used to determine the minimum type size; see § 8.2. for this determination.
(Added 1990)

11.30. Header Strip. - The declaration of quantity of the contents of a package is exempt from § 8.1.1. Location, requiring the quantity declaration to appear in the bottom 30 % of the principal display panel, as long as the declaration of quantity appears in the lower 30 % of the header strip or header label. In no case may the size of the header strip be used to determine the minimum type size; see § 8.2. for this determination.
(Added 1990)

11.31. Decorative Wallcovering Borders. - Decorative wall-covering borders, when packaged and labeled for retail sale, shall be exempt from the requirements of § 6.6.2., 6.8.2., and 6.9., provided the length and width of the border are presented in terms of the largest whole unit in full accord with the other requirements of the regulation.
(Added 1992; Amended 1993)

11.32. SI Units, Exemptions - Consumer Commodities. – The requirements for statements of quantity in SI units (except for those in § 10.10. Packaged Seed and § 11.22. Camera Film, Video Recording Tape, Audio Recording Tape and Other Image and Audio Recording Media Intended for Retail Sale and Consumer Use) in § 6. Declaration of Quantity: Consumer Packages shall not apply to:

(a) Foods packaged at the retail store level,

(b) Random weight packages (see § 2.4. and § 11.1.),

(c) Package labels printed before February 14, 1994,

(d) Meat and poultry products subject to the Federal Meat or Poultry Products Inspection Acts,

(e) Tobacco or tobacco products,

(f) Any beverage subject to the Federal Alcohol Administration Act,

(g) Any product subject to the Federal Insecticide, Fungicide, and Rodenticide Act,

(h) Drugs and cosmetics subject to the Federal Food, Drug and Cosmetic Act,

(i) Nutrition labeling information.

11.33. Inch-Pound Units, Exemptions - Consumer Commodities. - The requirements for statements of quantity in inch-pound units shall not apply to packages that bear appropriate SI units. This exemption does not apply to foods, drugs, or cosmetics or to packages subject to regulation by the Federal Trade Commission, meat and poultry products subject to the Federal Meat or Poultry Products Inspection Acts, and tobacco or tobacco products.
(Added 1999)

Section 12. Variations to Be Allowed

[NOT ADOPTED]

Section 13. Retail Sale Price Representations

[NOT ADOPTED]

Section 14. Revocation of Conflicting Regulations

[NOT ADOPTED]

Section 15. Effective Date

[NOT ADOPTED]

4512. Additional Requirements. The following requirements apply in addition to those contained within the Uniform Packaging and Labeling Regulation in the National Institute of Standards and Technology Handbook 130.

4512.1. Polyethylene Products. The declaration of quantity of contents for polyethylene products shall be as follows:

(a) Consumer and nonconsumer packages of sheeting and film.

- **Length and width.**
- **Area in square meters or square feet.**
- **Thickness in micrometers and mils.**
  (1 mil = 0.001 in = 25.4 micrometers)
- **Weight.**

(b) The following consumer products sold at retail shall be labeled in the following terms:

(1) Food wrap.

- **Length and width.**
- **Area in square meters or square feet.**

(2) Lawn and trash bags.

- **Count.**
- **Dimensions.**
- **Thickness in micrometers and mils.**
- **Capacity.**

(3) Food and sandwich bags.

- **Count.**
- **Dimensions.**
- **Capacity (except for fold-over sandwich bags).**

(c) Bags not intended for the retail consumer shall be labeled in terms of:

- **Count.**
- **Dimensions.**
- **Thickness in micrometers or mils.**
- **Weight.**
- **Capacity.**

4512.2. Animal Bedding. Packaged animal bedding of all kinds, except for baled straw, shall be labeled by volume, that is by cubic meter, liter, or milliliter, and by the cubic yard, cubic foot, or cubic inch. If the commodity is packaged in a compressed state, the quantity declaration shall include both the quantity in the compressed state and the usable quantity that can be recovered. Example: "250 ml – expands to 500 ml (500 cu in expands to 1000 cu in)".

4512.3. Enforcement. A sealer may by written order forbid the display for sale, sale, or transport of any package which does not bear the labeling required by Chapter 6, of Division 5 of the Business and Professions Code.

*UPLR Appendix A. SI/Inch-Pound Conversion Factors***					
Length					
1 mil (0.001 in)	=	25.4 µm	1 micrometer	=	0.039 370 mil
1 inch	=	2.54 cm*	1 millimeter	=	0.039 370 1 in
1 foot	=	30.48 cm*	1 centimeter	=	0.393 701 in
1 yard	=	0.9144 m*	1 meter	=	3.280 84 ft
1 rod	=	5.029 2 m			
Area					
1 square inch	=	6.4516 cm^2 *	1 square centimeter	=	0.155 000 in^2
1 square foot	=	929.030 cm^2	1 square decimeter	=	0.107 639 ft^2
1 square yard	=	0.836 127 m^2	1 square meter	=	10.763 9 ft^2
Volume or Capacity					
1 cubic inch	=	16.3871 cm^3	1 cubic centimeter	=	0.0610 237 4 in^3
1 cubic foot	=	0.028 316 8 m^3	1 cubic decimeter	=	0.035 314 7 ft^3
1 cubic foot	=	28.3168 L			
1 cubic yard	=	0.764 555 m^3	1 cubic meter	=	35.314 7 ft^3
				=	1.307 95 yd^3
fluid ounce	=	29.573 5 mL	1 milliliter	=	0.033 814 fl oz
1 liquid pint	=	473.177 mL	1 liter	=	1.056 69 liq qt
	=	0.473 177 L	1 liter	=	0.264 172 gal
1 liquid quart	=	946.353 mL	1 dry pint	=	550.610 5 mL
	=	0.946 353 L	1 dry quart	=	1.101 221 L
1 gallon	=	3.785 41 L	1 peck	=	8.809768 L
1 bushel	=	35.2391 L	1 gill	=	118.2941 mL
Mass (Weight)					
1 ounce	=	28.349 5 g	1 milligram	=	0.000 035 274 oz
1 pound	=	453.592 37 g*		=	0.015 432 4 grain
	=	453 592 kg	1 gram	=	0.035 274 oz
1 grain	=	64.79891 mg	1 kilogram	=	2.204 62 lb
Temperature					
$t_{\circ C} = \frac{5}{9}(t_{\circ F} - 32)$ *			$t_{\circ F} = 1.8\ t_{\circ C} + 32$ *		

* Exactly

** These conversion factors are given to six or more significant digits in the event such accuracy is necessary. To convert to inch-pound units, divide by the factor rather than multiplying.

(Amended 1998)

[THIS PAGE LEFT INTENTIONALLY BLANK]

UPLR Appendix B. Converting Inch-Pound Units to SI Units for Quantity Declarations on Packages

1. Conversion - To convert an inch-pound quantity to an SI quantity, multiply the appropriate conversion factor in Table 1 in Appendix A by the inch-pound unit and round according to the following rules.

2. Rounding and Significant Digits - It is the packager's responsibility to round converted values appropriately and select the appropriate number of significant digits to use in quantity declaration. [These rounding rules are for converting quantity determinations on packages and do not apply to digital scales that automatically round indications to the nearest indicated value.] Conversions, the proper use of significant digits, and rounding must be based on the packer's knowledge of the accuracy of the original measurement that is being converted. For example: If a package is labeled 453.59 g (1 lb), the packer is implying that the package declaration is accurate within ± 0.005 g (or ± 5 mg). For liquid volume measure, a label declaration of 473 mL (16 fl oz) implies that the package declaration is accurate to within ± 0.5 mL (0.01 fl oz). The requirements of 6.13. Rounding apply to all quantity declarations that are derived from converted values:

> **6.13. Rounding. - In all conversions for the purpose of showing an equivalent SI or inch-pound quantity to a rounded inch-pound or SI quantity, or in calculated values to be declared in the net quantity statement, the number of significant digits retained must be such that accuracy is neither sacrificed nor exaggerated. Conversions, the proper use of significant digits, and rounding must be based on the packer's knowledge of the accuracy of the original measurement that is being converted. In no case shall rounded net contents declarations overstate a quantity; the packer may round converted values down to avoid overstating the net contents.**

NOTE: *When as a result of rounding SI or customary inch-pound declarations calculated based on the conversion factors in Appendix A, the resulting declarations are not exact, the largest number will be used for enforcement purposes to determine whether a package contains at least the declared amount of the product.*

Do not round conversion factors or any other quantity used or determined in the calculation; only round the final quantity to the number of significant digits needed to maintain the accuracy of the original quantity. Use the rounding rules presented below in Table 1 as guidance to round the final result. In general, quantity declarations on consumer commodities should only be shown to two or three significant digits (for example, 453 g or 85 g). Any final zeros to the right of the decimal point need not be expressed. The inch-pound and SI declarations of quantity must be accurate and equivalent to each other. For example, a package bearing a net weight declaration of 2 lb (32 oz) must also include an SI declaration of 907 g.

Table 1. Rounding Rules

When The First Digit Dropped is:	The Last Digit Retained is:	Examples
less than 5	Unchanged	2.44 to 2.4 2.429 to 2.4
more than 5, or 5 followed by at least 1 digit other than 0	Increased by 1	2.46 to 2.5 2.451 to 2.5
5 followed by zeros	Unchanged if Even, or Increased by 1 if Odd	2.450 to 2.4 2.550 to 2.6

(a) When the first digit discarded is less than five, the last digit retained should not be changed. For example, if the quantity 984.3 is to be declared to three significant digits, the figure 3 to the right of the decimal point must be discarded since it is less than 5 and the last digit to be retained (the figure "4") will remain unchanged. The rounded number will read 984. The same rationale applies to numbers declared to two significant digits (for example 68.4 and 7.34); again the final digit is dropped and the last digit retained remains unchanged so that the "rounded-off" numbers become 68 and 7.3, respectively.

(b) When the first digit to be discarded is greater than five, or it is a five followed by at least one digit other than zero, the last digit to be retained should be increased by one unit.

Examples:

984.7	becomes	985
984.51	becomes	985
6.86	becomes	6.9
6.88	becomes	6.9

(c) When the first digit to be discarded is exactly five, followed only by zeros, the final digit to be retained should be rounded up if it is an odd number (1, 3, 5, 7, or 9), but no adjustment should be made if it is an even number (2, 4, 6, or 8).

Examples:

984.50	becomes	984
985.50	becomes	986
68.50	becomes	68
7.450	becomes	7.4
7.550	becomes	7.6

Note: See additional examples on page QC-37.

3. Additional Advice on Rounding and Significant Digits

a. These rules require the packer to use good judgement in making decisions on how to round and the number of significant digits to use in quantity declarations. Rounding should always be done in one step; for example, if 16.94647 g has to be rounded to 3 significant digits, it should be rounded to 16.9 g, not 16.9465, then to 16.946, then to 16.95 which would then round to 17.0 g (see rounding rules above).

b. Do not use rounded SI values to calculate quantities. For example, using 1 inch = 25.4 mm, rounded to 25 mm, should not be multiplied by 2 to determine the SI equivalent for 2 inches. The SI equivalent for 2 in is determined by multiplying 2 in x 25.4 mm = 50.8 mm, then rounding to 51 mm.

c. If a dimension given as 8 feet is valid to the nearest 1/10 inch, consider it to mean 96.0 inches and treat it as having 3 significant digits. The rounded dimension would then be 2.44 m instead of 2.4 m.

d. Conversions using a multiple digit conversion factor usually give a product with more digits than the original quantity. The final product should contain no more significant digits than are contained in the number with the fewest significant digits used in the conversion. For example, the area of a sheet of paper is determined on a calculator by multiplying 1.25 cm (length) x 1.5 cm (width) = 1.875 cm^2. The product given to 4 significant digits on the calculator cannot be any more accurate than 2 significant digits (the number of significant digits in 1.5 cm), so the area should be declared as 1.9 cm^2.

e. Packagers of consumer commodities should be aware that when a converted value is rounded up, there may be a need to (1) increase the package contents and/or, (2) select a converted value that does not exaggerate the precision of the quantity or overstate the net contents. For example, under the rules above, a net weight declaration of 16 oz (453.592 437 g) would be rounded up 0.4 g to 454 g for 3 significant digits. Inspections by weights and measures officials are typically conducted using devices with a resolution of 0.5 g or less. If the packer does not address this possibility, some lots of commodities may pass when the inch-pound declaration is tested, but fail when the SI declaration is verified.

Examples		
Weight: to convert ounces to grams – multiply ounces x 28.349 5 grams		
Inch-pound	Calculated SI	Rounded SI
1.0 oz	28.349 5 g	28 g
5.0 oz	141.747 6 g	142 g*
10 1/4 oz	290.582 38 g	291 g*
16.0 oz	453.592 4 g	454 g*
32.0 oz	907.184 g	907 g
48.0 oz	1360.776 g	1.36 kg
5 lb	2.267 961 85 kg	2.27 kg*
10 lb	4.535 923 7 kg	4.54 kg*
25 lb	11.339 809 25 kg	11.3 kg
Liquid Volume: to convert fluid ounces to milliliters multiply fluid ounces x 29.573 5 milliliters		
Inch-Pound Quantity	Calculated SI Quantity	Rounded SI
1.0 fl oz	29.573 5 mL	30 mL*
8.0 fl oz	236.588 mL	237 mL*
16.0 fl oz	473.176 mL	473 mL
32.0 fl oz	947.353 mL	947 mL
1 gal	3.785 41 L	3.79 L*
2-1/2 gal	9.463 525 L	9.46 L
5 gal	18.927 05 L	18.9 L
Dry Measure: to convert dry pints to milliliters - multiply dry pints x 550. 610 5 milliliters		
Inch-Pound Quantity	Calculated SI Quantity	Rounded SI Quantity
1 dry pt	550.610 5 mL	551 mL*
1 dry qt	1.101 221 L	1.1 L
Length: to convert inches to millimeters - multiply inches x 25.4 millimeters		
Inch-Pound Quantity	Calculated SI Quantity	Rounded SI Quantity
1 in	25.4 mm	25 mm
10.5 in	266.7 mm	267 mm* or 26.7 cm*
1 ft	30.48 cm	305 mm* or 30.5 cm*
5 ft	152.4 cm	152 cm or 1.5 m
50 ft	15.240 03 m	15.2 m
100 ft	30.480 06 m	30.5 m*
* See e in Section 2 on page QC-36		

[THIS PAGE LEFT INTENTIONALLY BLANK]

Article 3. Wood for Fuel Purposes

4530. Definitions. - The following definitions apply to this article only and do not affect the provisions of any other section, article, or chapter. Nothing in this article shall be deemed to apply to charcoal sold for fuel purposes.

(a) **Bulk Firewood.** All firewood which is not packaged and all packaged firewood of quantities greater than four cubic feet.

(b) **Cord.** The cord is the standard measure for bulk firewood, and shall contain 128 cubic feet of wood, ranked and well-stowed.

(c) **Firewood.** "Firewood" has the same meaning as "wood for fuel purposes".

(d) **Kindling.** Small pieces of wood that are readily ignited and primarily used in starting a fire.

(e) **Manufactured Products.** Compressed or non-compressed products for fuel purposes made from, but not limited to, sawdust, treated or untreated chips or chunks, cut or split wood.

(f) **Other Terms.** The use of the terms "face cord", "rack", "rick", "tier", "pile" or "truck-load", or any other term describing a unit of measure different than those specified in this article shall be prohibited.

(g) **Ranked and Well-Stowed.** Wood placed in a row or rows, with individual pieces touching and parallel to each other and stacked in a compact manner minimizing spaces between pieces.

(h) **Sell.** "Sell" has the same meaning as defined in Business and Professions Code Section 12009.

(i) **Wood for Fuel Purposes.** Any kindling, logs, boards, timbers, slab wood, mill wood, manufactured products, cut timber, or other wood, split or not split, used for or intended to be used for campfires, or for heating in fireplaces or stoves, or for cooking.

NOTE: Authority cited: Sections 12024.11, 12027 and 12107.1, Business and Professions Code. Reference: Sections 12024.11 and 12107.1, Business and Professions Code.

4531. Method of Sale. - Wood, for fuel purposes, shall be sold or offered for sale by cord measure, fraction of the cord, or percentage of the cord, excepting as hereinafter provided.

(a) Wood for fuel purposes, other than manufactured products, when sold in quantities less than one-eighth cord, shall be sold by the cubic foot or fraction of the cubic foot.

(b) Manufactured products for fuel purposes shall be sold as follows:

(1) Compressed products having any dimension greater than six inches shall be sold by weight and count.

(2) Compressed products not greater than six inches in any dimension shall be sold by weight.

(3) Noncompressed products not greater than six inches in any dimension shall be sold by the cubic foot or fraction of the cubic foot.

NOTE: Authority cited: Sections 12024.11, 12027 and 12107.1, Business and Professions Code. Reference: Sections 12024.11 and 12107.1, Business and Professions Code.

4532. Invoice. - A sales invoice or delivery ticket shall be presented by the seller to the purchaser whenever any non-packaged wood for fuel purposes is sold. The sales invoice or delivery ticket shall contain at least the name and address of the seller, the date purchased or delivered, the quantity purchased, and the price of the quantity purchased.

NOTE: Authority cited: Sections 12024.11, 12027 and 12107.1, Business and Professions Code. Reference: Sections 12024.11 and 12107.1, Business and Professions Code.

4533. Kindling. - Whenever kindling is included as part of the represented quantity and is ten percent or more by volume of the represented quantity, the percentage of kindling, within five percent by volume, shall be stated on the label or sales invoice or delivery ticket.

NOTE: Authority cited: Sections 12024.11, 12027 and 12107.1, Business and Professions Code. Reference: Sections 12024.11 and 12107.1, Business and Professions Code.

4534. Identity. - Whenever there is a representation as to the species, species group of origin or the type of wood, the representation or statement of identity shall be consistent with one of the following:

(a) If a common name is stated, all wood shall be of that species (e.g., White Oak, Jeffery Pine, Grand Fir, etc.).

(b) If a group is stated, all wood shall be of that same group of origin (e.g., oak, pine, fir, etc.).

(c) If either hardwood or softwood is stated, all wood must be of that type and the common name or group of origin for any wood present must be stated. If there is a mixture of types (hardwood and softwood), the percentage of each, within 10% of volume of each, shall be stated. The volume of each shall be determined as per the volumetric test procedures set forth below.

NOTE: Authority cited: Sections 12024.11, 12027 and 12107.1, Business and Professions Code. Reference: Sections 12024.11 and 12107.1, Business and Professions Code.

4535. Volumetric Test Procedure for Bulk Firewood.

4535.1. Stacking:

(a) Firewood shall be measured when ranked and well-stowed, and stacked in a geometrical shape that will facilitate volume calculations (i.e., rectangular, triangular or combination of the two). The stack may need some adjustment to meet these requirements. (See Figure 1.)

NOTE: If the wood is stacked in multiple rows, the measurements of the individual rows are used to determine the volume of the total stack.

NOTE: Authority cited: Sections 12024.11, 12027 and 12107.1, Business and Professions Code. Reference: Sections 12024.11 and 12107.1, Business and Professions Code.

Figure 1.

Cord of 128 cubic feet ranked and well-stowed.

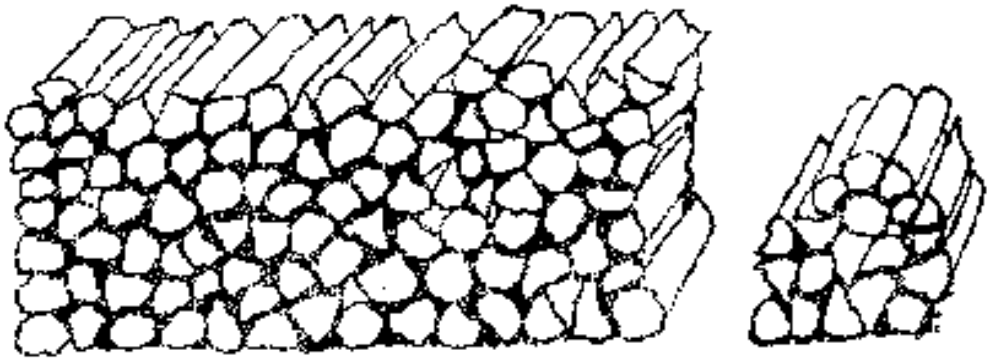

Same cord of 128 cubic feet that is not ranked and well-stowed. Shows overage!

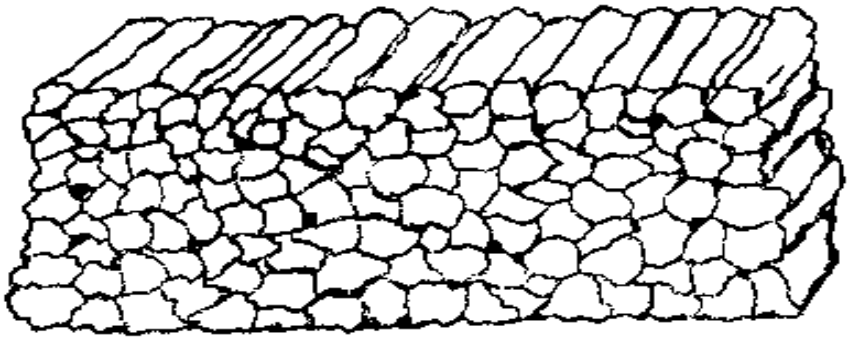

4535.2. Measuring:

NOTE: A calibrated linear measure shall be used. All measurements shall be taken in increments no greater than 1/8 inch and rounded up. More measurements than specified may be taken.

(a) Measurement of the rectangular portion of a stack.

(1) Average height determination of a rectangular stack: Starting at one end of the stack, measure the height of the stack, on both sides, at approximately 2 foot intervals, along the length of the stack, or at four proportionately equal intervals if the stack is less than 6 feet long. (Minimum of 4 measurements on each side shall be taken.) Calculate the average height. (See Figure 2.)

Figure 2. Height of Stack.

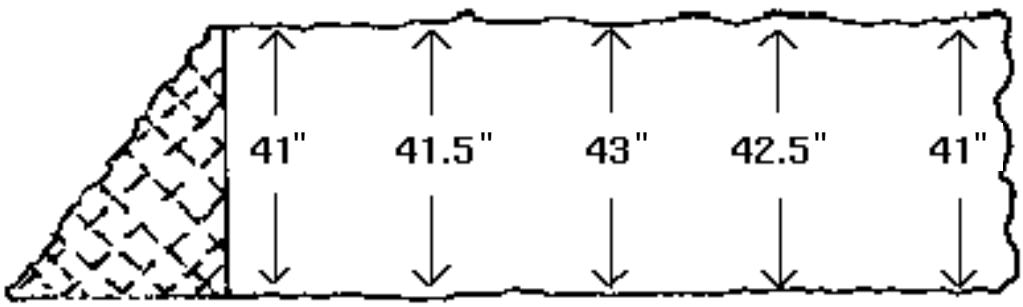

Average Height = (41" + 41.5" + 43" + 42.5" + 41") ÷ 5 = 41.8 inches

(2) **Average length of a rectangular stack determination:** Starting at the base, measure the length of the stack at approximate 1 foot intervals up to the top, or at four proportionately equal intervals if the stack is less than 3 feet high. (Minimum of 4 measurements shall be taken.) Calculate the average length. (See Figure 3.)

Figure 3. Length of Stack.

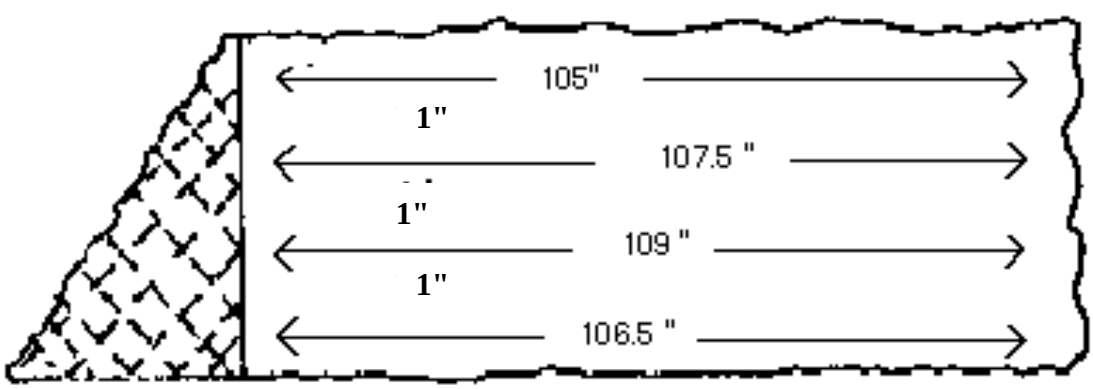

Average Length = (106.5" + 109" + 107.5" + 105") ÷ 4 = 107 inches

(3) **Average width of stack determination:** This dimension is calculated by averaging the length of individual pieces of wood. A representative random sample of the individual pieces shall be selected. If a triangular stack is combined with a rectangular stack, the sample shall be selected randomly from the entire stack. The minimum size of the sample shall be as shown in the following table.

Amount Represented	Number of Pieces
1/2 cord and less	12
More than 1/2 cord to 1 cord	24
Over 1 cord to 1-1/2 cords	36
Over 1-1/2 cords to 2 cords	48
Over 2 cords	48 plus 12 for each 1/2 cord or fraction thereof

Measure the length of the pieces, measuring from center-to-center, as shown in Figure 4. Calculate the average length.

Figure 4. Length of Angle-Cut Log.

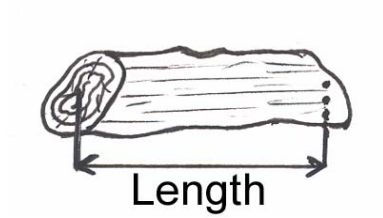

Average Length = (18" + 18.25" + 19" + 17.75" + 18.5" + 18") ÷ 6 = 18.25 inches

(b) **Measurement of the triangular portion of a stack:**

(1) Measure the height and the base of the triangular portion. (See Figure 5.)

(2) Average width of the stack is as previously calculated in Section 4535.2.(a)(3)

NOTE: Authority cited: Sections 12024.11, 12027 and 12107.1, Business and Professions Code. Reference: Sections 12024.11 and 12107.1, Business and Professions Code.

Figure 5. Triangular Measurements.

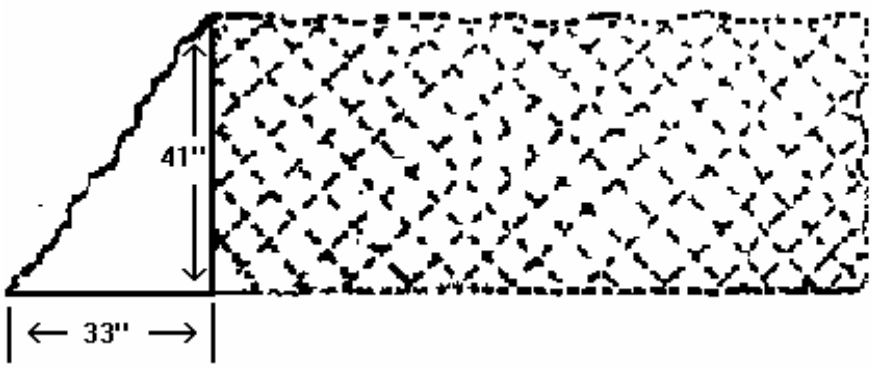

4535.3. Calculate the volume:

(a) Volume of the rectangular portion = average height of the stack x average length of the stack x average width of the stack.

(Example: 41.8" x 107" x 18.25" = 81,624.95 cubic inches.)

(b) Volume of the triangular portion = height x base length x average width of the stack divided by 2.

(Example: 41" x 33" x 18.25" ÷ 2 = 12,346.125 cubic inches.)

(c) Volume of the combined portions = volume of the rectangular portion + volume of triangular portion.
(Example: 81,624.95 cu in + 12,346.125 cu in = 93,971.075 cubic inches.)
.

NOTE: For stacks with multiple rows, the volume of the total stack is the sum of the volumes of the individual rows.

(d) Volume of stack in cords = volume of stack in cubic inches divided by 221,184 cubic inches per cord.

(Example: 93,971.075 cu. in. ÷ 221,184 cu. in. per cord = 0.42 cords.)

(e) Percentage of the cord = decimal fraction of the cord times 100.

(Example: 0.42 cords x 100 = 42% [Percent].)

NOTE: Authority cited: Sections 12024.11, 12027 and 12107.1, Business and Professions Code. Reference: Sections 12024.11 and 12107.1, Business and Professions Code.

TABLE OF EQUIVALENTS				
1 cubic foot = 1,728 cubic inches 1 cord = 128 cubic feet = 221,184 cubic inches				
Common Fractions		Decimal Fractions		Percentages
1/8	=	.125	=	12.5%
1/4	=	.25	=	25%
3/8	=	.375	=	37.5%
1/2	=	.5	=	50%
5/8	=	.625	=	62.5%
3/4	=	.75	=	75%
7/8	=	.875	=	87.5%

4536. Volumetric Test Procedure for Packaged Firewood With a Labeled Net Content of Four Cubic Feet or Less.

NOTE: A calibrated linear measure shall be used.

All measurements shall be taken in increments no greater than 1/8 inch and rounded up, except as noted in 4536.1.(a).

Unless otherwise indicated, all measurements are to be taken without rearranging the wood or removing it from the package.

If the layers of wood are cross hatched or not ranked in discrete sections in the package, the wood shall be removed from the package and measured according to the procedures prescribed in Sections 4535.1 through 4535.3 of this regulation.

Lot compliance shall be determined using the sampling procedures in Chapter 11 of this Division, except that the maximum allowable variations for individual packages labeled by volume shall not be applied to packaged firewood.

NOTE: Authority cited: Sections 12024.11, 12027 and 12107.1, Business and Professions Code. Reference: Sections 12024.11 and 12107.1, Business and Professions Code. California Hotwood, Inc. v. Henry Voss, et al. (Super. Ct. San Joaquin County, 1991, No. 234613).

4536.1. Boxed Firewood.

(a) **Average height determination of wood within the box:** Open the box and measure the internal height of the box (h). Take three measurements (d) along each end of the stack by measuring from the bottom of a straight edge placed across the top of the box to the highest point on the two outermost top pieces of wood and the centermost top piece of wood rounding measurements down to the nearest 1/8 inch. However, if there are obviously pieces missing out of the top layer of wood, additional height measurements shall be taken at the highest point of the uppermost pieces of wood located at the midpoints between the three measurements on each end of the stack. (See Figure 6.) The average height of the stack is calculated by averaging these measurements and subtracting from the internal height of the box.

FIGURE 6.

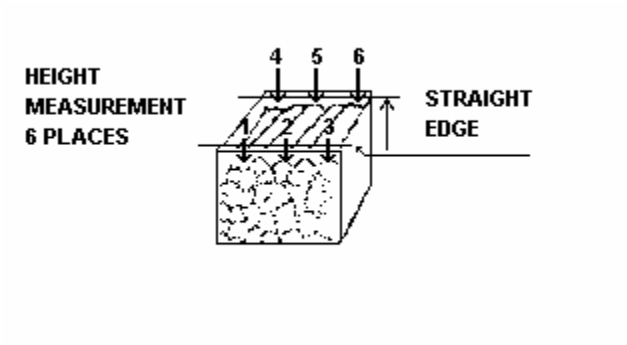

Calculate the average height of stack.

$$\text{Average Height of Stack} = h - [(d^1 + d^2 + d^3 + d^4 + d^5 + d^6) \div 6]$$

(b) **Average width of the wood within the box:** Determine the width of the stack of wood at three places along the top of the stack. These measurements shall be taken on both ends and in the middle of the box, measuring the inside distance from one side of the box to the other, perpendicular to the long axis of the wood. (See Figure 7.)

FIGURE 7.

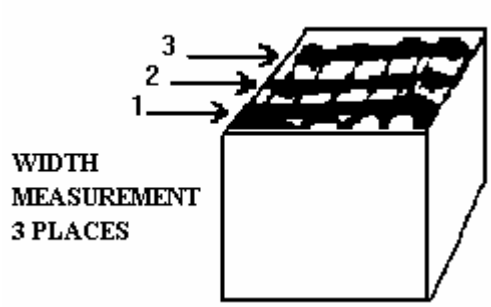

Calculate the average width.

$$\text{Average Width} = (W^1 + W^2 + W^3) \div 3$$

(c) **Average length of the pieces of wood:** Remove the wood from the box and select the five pieces with the greatest girth. Measure the length of the five pieces, measuring from center-to-center, as shown in Figure 8.

FIGURE 8.

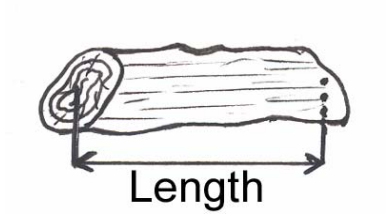

Calculate the average length of the five pieces.

$$\text{Average Length} = (L^1 + L^2 + L^3 + L^4 + L^5) \div 5$$

(d) **Calculate the volume of the wood within the box.**

$$\underset{\text{(in cu ft)}}{\text{Volume of Wood}} = \underset{\text{(in inches)}}{\text{Average Height}} \times \underset{\text{(in inches)}}{\text{Average Width}} \times \underset{\text{(in inches)}}{\text{Average Length}} \div 1728\ \text{in}^3/\text{ft}^3$$

(e) For boxes of wood which are packed with the wood ranked in two discrete sections, which are perpendicular to each other, calculate the volume of wood in the box by determining the average height, width, and length as in (a), (b), and (c) above for each discrete section and totaling the calculated volumes of the two sections. Except that the width measurement for V_2 shall be taken from the inside edge of the box adjacent to V_2 to the plane separating V_1 and V_2. (See Figure 9.)

FIGURE 9.

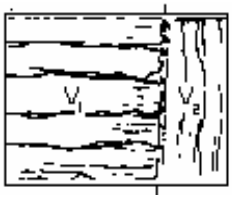

TOTAL VOLUME = $V_1 + V_2$

NOTE: Authority cited: Sections 12024.11, 12027 and 12107.1, Business and Professions Code. Reference: Sections 12024.11 and 12107.1, Business and Professions Code. California Hotwood, Inc. v. Henry Voss, et al. (Super. Ct. San Joaquin County, 1991, No. 234613).

4536.2. Bundles and Bags of Firewood.

(a) **Average area of ends:** Secure a strap around each end of the bundle or bag of wood to prevent movement during testing and to provide a definite perimeter. Set one end of the bundle or bag on tracing paper large enough to cover the end completely. Draw a line around the perimeter of the bundle or bag on the tracing paper. Transfer the tracing paper to a template graduated in square inches. Count the number of square inches enclosed within the perimeter line (portions of square inches not completely within the perimeter line shall be estimated to the nearest one quarter square inch). Repeat this process on the opposite end of the bundle or bag.

NOTE: Two thin straps, one inch to two inches wide, with connecting buckles, and long enough to easily encircle the bundle or bag, should be used to secure the wood.

Calculate the average area.

$$\text{Average Area} = (\text{Area \#1} + \text{Area \#2}) \div 2$$

(b) **Average length of the pieces of wood:** Select the five pieces with the greatest girth. Measure the length of the pieces as shown in Figure 8 for boxed wood.

Calculate the average length of the pieces of wood.

$$\text{Average Length} = (L^1 + L^2 + L^3 + L^4 + L^5) \div 5$$

(c) Calculate the volume of the wood.

$$\underset{\text{(in cu ft)}}{\text{Volume of Wood}} = \underset{\text{(in inches}^2\text{)}}{\text{Average Area}} \times \underset{\text{(in inches)}}{\text{Average Length}} \div 178\ \text{in}^3/\text{ft}^3$$

NOTE: Authority cited: Sections 12024.11, 12027 and 12107.1, Business and Professions Code. Reference: Sections 12024.11 and 12107.1, Business and Professions Code. California Hotwood, Inc. v. Henry Voss, et al. (Super. Ct. San Joaquin County, 1991, No. 234613).

[THIS PAGE LEFT INTENTIONALLY BLANK]

Chapter 11. Sampling and Testing Procedures for Determining the Net Contents of Packaged Commodities

4600. National Uniformity. - Sampling and testing procedures for determining the net contents of packaged commodities shall conform to the latest requirements set forth in the National Institute of Standards and Technology Handbook 133, "Checking the Net Contents of Packaged Goods," which is herein incorporated by reference. Copies of Handbook 133 may be purchased from the Superintendent of Documents, U.S. Government Printing Office, Washington, DC 20402.

NOTE: Authority cited: Sections 12027, 12211, and 12609, Business and Professions Code. Reference: Section 12211, Business and Professions Code.

[THIS PAGE LEFT INTENTIONALLY BLANK]