State of California

Department of Food and Agriculture
Division of Measurement Standards

Certificate Number: 5650-11

California Type Evaluation Program
Certificate of Approval
for Weighing and Measuring Devices

For:
Electronic Watt-hour Meter
Model: ESP2-354EDM-N
Voltage Rating: 120/208/240 VAC
Class (CL): 200 Amps
Test Amps (TA): 30 Amps
Watt-hour Test Constant (Kh) = 1.25 Wh

Submitted by:
OSC Ohio Semitronics, CA
1051 Serpentine Lane, Suite 400
Pleasanton, CA 94566
Tel: (614) 527-0530
Fax: (614) 771-6383
Contact: Robert Simpson
Internet: www.osc-intellimeter.com

Standard Features and Options

Internal Scrolling Indicator:
LCD (Liquid Crystal Display)

Current Transformers (CT's):
OSC Ohio Semitronics CA, Model Number: BCT-013-200, closed loop style, accuracy class 0.1, rating 200A, CTR 200A:26.6mA **(See Figure 1)**. OSC Ohio Semitronics CA, Model Number: SCT-013-200, split loop style, accuracy class 0.1, rating 200A, CTR 200A:26.6mA **(See Figure 2)**
Arrow on CT depicts load side.

Figure 1

Figure 2

This device was evaluated under the California Type Evaluation Program (CTEP) and was found to comply with the applicable technical requirements of California Code of Regulations for "Weighing and Measuring Devices." Evaluation results and device characteristics necessary for inspection and use in commerce are on the following pages.

Effective Date: March 11, 2011

Kristin J. Macey, Director

OSC Ohio Semitronics, CA
Electronic Watt-hour Meter
Model: ESP2-354EDM-N

Application: Electronic watt-hour meter for use in legally sub-metered electric service applications. Meter is approved for single-phase 2-wire and single-phase 3-wire service applications.

Identification: The model ESP2-354EDM-N watt-hour meter identification is located on the main face of the meter. The serial number is inscribed into the body of the meter. **(See Figure 3 for Identification label location)**

Sealing: There are no adjustable metrological components under the cover. The model ESP2-354EDM-N meter is equipped with two drilled head screws which allow wire security seals to be placed on each meter door. **(See Figure 3)**

Figure 3

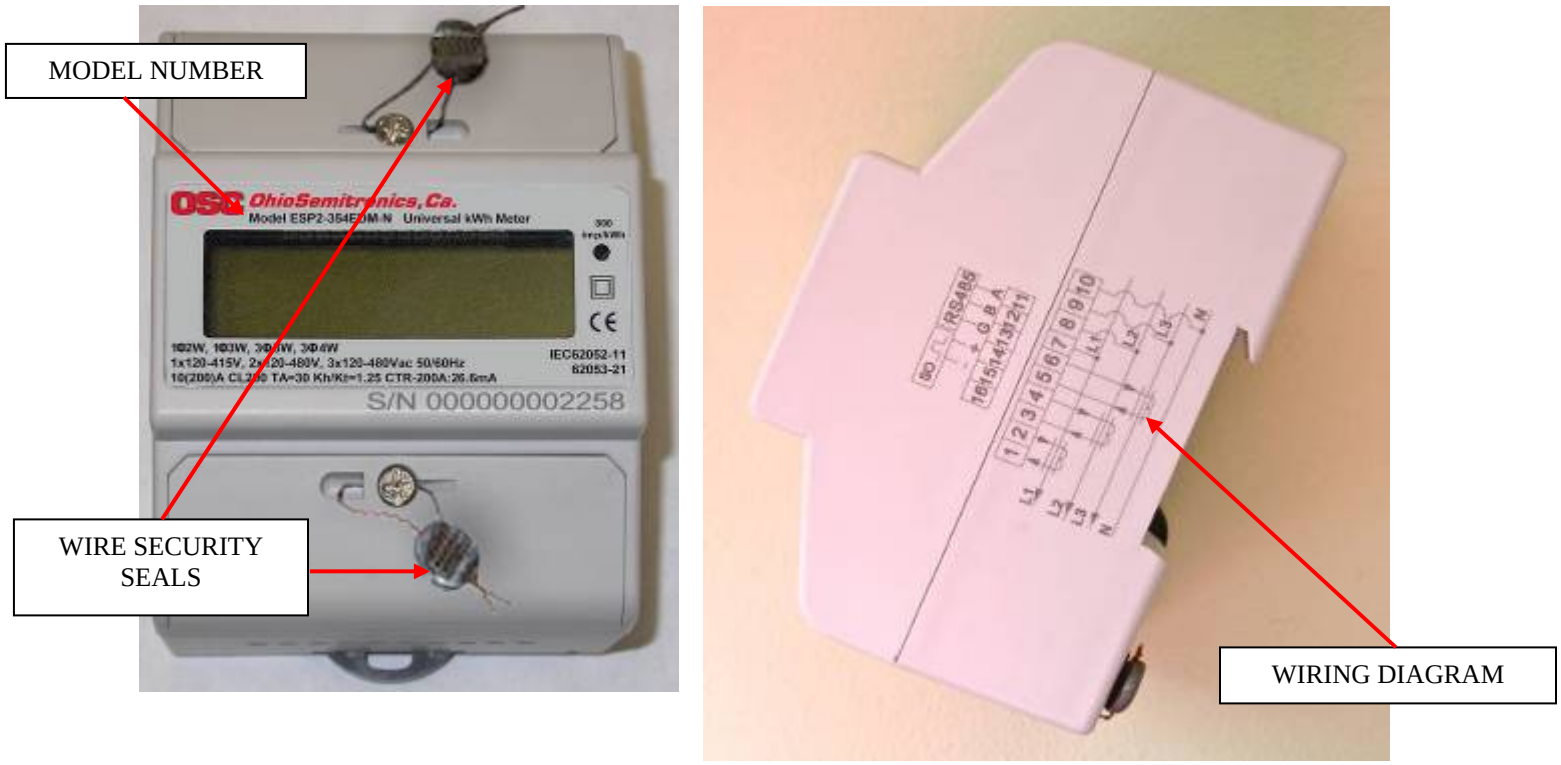

OSC Ohio Semitronics, CA
Electronic Watt-hour Meter
Model: ESP2-354EDM-N

Operation: The **"Pulse LED"** provides a visual display of kWh usage, with a pulse rate (K_t) of 1.25. Terminal connections 14 and 15 provide "dry contact" pulse output at the same rate (K) of 1.25. On the LCD display, 02 records total reversed kWh when the CT direction is reversed.

The LCD display can show the following items: Total electricity consumption (kWh), reverse electricity consumption (kWh), L1, L2, L3 voltage (U), L1, L2, L3 current (A), L1, L2, L3 total power (P) and L1, L2, L3 COS, five seconds between every item.

Display Registers

01	02	03	04	05	06	07	08	09	10	11	12	13	14	15
Total kWh	Reverse kWh	Volts L1	Volts L2	Volts L3	Amps L1	Amps L2	Amps L3	Watts L1	Watts L2	Watts L3	Total Watts	Cos L1	Cos L2	Cos L3

Wiring Diagrams

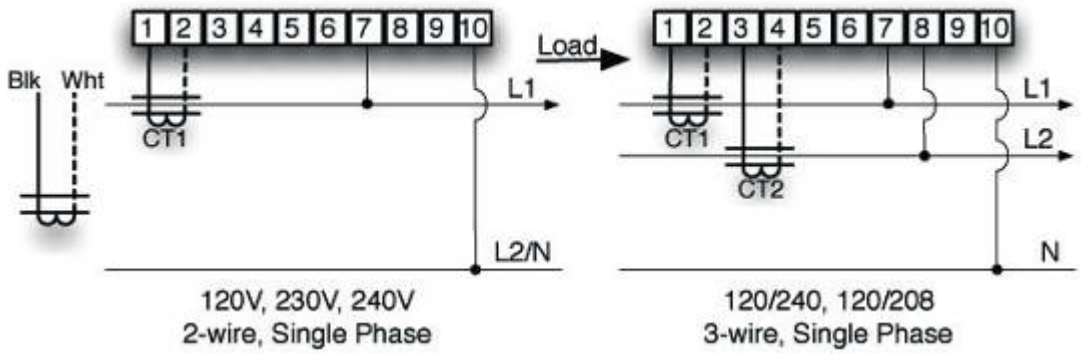

Test Conditions: No testing was done on the meter model ESP2-354EDM-N. The model ESP2-354EDM-N is metrologically the same as the "EKM Metering LLC" model EKM-OMIv.3. Test conditions for model EKM-OMIv.3 are listed below for reference. The emphasis of this evaluation was on labeling and sealing of the meter and current transformers.

Certificate of Approval Number 5645-11: Samples of each model meter and current transformers were submitted for evaluation. The meters were tested at the California Division of Measurement Standards (DMS) lab. After a throughput period of approximately 30 days the meters were retested. The meters were subjected to a combined total of over 210 tests from 3 amps to 50 amps at both unity and 0.5 power factors.

Results of the evaluation indicate the devices comply with applicable requirements.

Type Evaluation Criteria Used: Title 4, California Code of Regulations, 2010 Edition

Tested By: Matt Stevens (CA)