FIELD REFERENCE MANUAL

California Code of Regulations
Title 4, Division 9

California Department of Food and Agriculture
Division Of Measurement Standards

FIELD REFERENCE MANUAL - DIVISION 9
Division of Measurement Standards
Department of Food and Agriculture

Table of Contents

	Page
Chapter 1. Tolerances and Specifications for Commercial Weighing and Measuring Devices	
Article 1. National Uniformity, Exceptions and Additions	D0-1
Introduction	D-INTRO-1
Section 1.10. General Code	D1-1
Section 2.20. Scales	D2-1
Scales Code Index	S-INDEX-1
Section 2.21. Belt Conveyor Scale Systems	D2-27
Section 2.22. Automatic Bulk Weighing Systems	D2-33
Section 2.23. Weights	D2-39
Section 2.24. Automatic Weighing Systems	D2-43
Section 3.30. Liquid-Measuring Devices	D3-1
LMD Index	LMD-INDEX-1
Section 3.31. Vehicle-Tank Meters	D3-15
Section 3.32. Liquefied Petroleum Gas and Anhydrous Ammonia Liquid-Measuring Devices	D3-21
Section 3.33. Hydrocarbon Gas Vapor-Measuring Devices	D3-29
Section 3.34. Cryogenic Liquid-Measuring Devices	D3-37
Section 3.35. Milk Meters	D3-43
Section 3.36. Water Meters	D3-47
Section 3.37. Mass Flow Meters	D3-53
Section 4.40. Vehicle Tanks Used as Measures	D4-1
Section 4.41. Liquid Measures	D4-5
Section 4.42. Farm Milk Tanks	D4-7

		Page
Section 4.43.	Measure-Containers	D4-11
Section 4.44.	Graduates	D4-13
Section 4.45.	Dry Measures	D4-17
Section 4.46.	Berry Baskets and Boxes	D4-19
Section 5.50.	Fabric-Measuring Devices	D5-1
Section 5.51.	Wire- and Cordage-Measuring Devices	D5-5
Section 5.52.	Linear Measures	D5-7
Section 5.53.	Odometers	D5-9
Section 5.54.	Taximeters	D5-11
Section 5.55.	Timing Devices	D5-15
Section 5.56.	Grain Moisture Meters	D5-19
Section 5.58.	Multiple Dimension Measuring Devices	D5-27
Section 5.59.	Electronic Livestock, Meat, and Poultry Evaluation Systems and/or Devices	D5-35
Article 2.	Specifications and Tolerances and Other Technical Requirements for Commercial Weighing and Measuring Devices Not Included in Handbook 44	D6-0
Article 2.1.	Liquefied Petroleum Gas Tanks When Mounted on Highway Vehicles and Used as Measures	D6-1
Article 2.2.	Electric Watt-Hour Meters	D7-1
Article 2.3.	Carbon Dioxide Liquid Measuring Devices	D8-1
Definitions		D-DEF-1
Appendices		
Appendix A.	Fundamental Considerations	APNDX-A-1
Appendix B.	Units and Systems of Measurement	APNDX-B-1
Appendix C.	General Tables of Units of Measurement	APNDX-C-1
Chapter 2.	**Special Equipment**	
Article 1.	Compressed Gas in Cylinders	SE1-1
Article 2.	Procedures for Type Approval and Field Compliance Testing of Vapor Recovery Systems	SE2-1

		Page
Chapter 3.	**Device Inspection**	
Article 1.	Frequency of Inspection	DI-1-1
Article 2.	Alternatives to Specified Frequency of Inspection	DI-2-1
Chapter 4.	**Registered Service Agencies**	RSA-1
Chapter 5.	**Sub-meter Billing for Utility Services**	SB1-1
Chapter 6.	**Automotive Products Specifications**	
Article 1.	Brake Fluid Standards	P-1
Article 2.	Brake Fluid Labeling 4110-4111 Repealed 11-19-85	P-1
Article 3.	Automatic Transmission Fluid Standards 4120-4126 Repealed 8-18-87	P-1
Article 4.	Automatic Transmission Fluid Registration 4130 Repealed 11-19-85	P-1
Article 5.	Automotive Spark Ignition Engine Fuel Standards	P-2
Article 6.	Engine Oil Labeling and Exemptions	P-3
Article 7.	Labeling and Specifications of Antifreezes and Coolants	P-4
Chapter 7.	**Advertising of Gasoline and Other Motor Vehicle Fuels**	P-7
Chapter 8.	**Motor Oil Fee**	P-8
Chapter 9.	**Weighmaster Enforcement**	
Article 1.	General Provisions	W-1
Article 2.	Weighmaster Certificates	W-1
Article 3.	Predetermined Individual Tare Weights	W-2
Article 4.	Seasonal Tare Weights	W-3
Article 5.	Common Tare Weights	W-4
Article 6.	Limits of Permissible Error	W-6
Article 7.	Average Tare Weights	W-7
Article 8.	Volumetric Conversion to Weight of Squid	W-8

	Page
Article 9. Director's Approval of Inspection of Weighmaster Records	W-9
Article 10. Timber Tare Weights	W-10
Article 11. Multiple Draft Weighing Operations	W-11
Chapter 10. Quantity Control	
Article 1. General	QC-1
Introduction	QC-3
Article 2. Uniform Packaging and Labeling Regulations	QC-5
Appendix A. SI/Inch-Pound Conversion Factors	QC-29
Appendix B. Converting Inch-Pound Units to SI Units	QC-31
Article 3. Wood for Fuel Purposes	QC-35
Chapter 11. Sampling and Testing Procedures For Determining the Net Contents of Packaged Commodities	
Section 4600. National Uniformity	QC-45
Chapter 12. Administration	
Article 1. Permit Reform Act	ADMIN-1
Article 2. Weights and Measures Penalty Guidelines	ADMIN-3

DISCLAIMER

This document represents the Division of Measurement Standards' field manual for enforcing regulations pertaining to weights and measures in California.

This field manual is not to be considered as the official Code of Regulations, as published by Barclays Law Publishers. For information concerning the contents of this document, please contact the Division of Measurement Standards by e-mail at dms@cdfa.ca.gov.

CHAPTER 1.
TOLERANCES AND SPECIFICATIONS FOR COMMERCIAL WEIGHING AND MEASURING DEVICES

Article 1. National Uniformity, Exceptions and Additions

4000. – Application. See Barclays for actual Text

NOTE: This section incorporates the adoption, by reference, of the National Institute of Standards and Technology Handbook 44.

4001. – Exceptions. See Barclays for actual Text

NOTE: The following sections of Handbook 44 are not adopted and are annotated "Not Adopted" in the text:

1.10. General Code.

G-S.1.2. Remanufactured Devices and Remanufactured Main Elements.

G.T.1. Acceptance Tolerances.

(b)
(c)
(d)

2.20. Scales.

S.1.8.3. Customer Indications.

N.3. Minimum Test Weights and Test Loads*.

UR.2.6.1. Vehicle Scales.

UR.3.7. Minimum Load on a Vehicle Scale.

3.30. Liquid Measuring Devices.

N.4.1.1. Wholesale Devices Equipped With Automatic Temperature Compensating Systems.

3.31. Vehicle-Tank Meters.

UR.2.2. Ticket Printer; Customer Ticket.

3.32. Liquefied Petroleum Gas and Anhydrous Ammonia Liquid-Measuring Devices.

S.2.6. Automatic Temperature Compensation.

N.4.1.1. Automatic Temperature Compensation.

UR.2.3. Vapor Return Line.

3.33. Hydrocarbon Gas Vapor - Measuring Devices.

S.4.3. Temperature Compensation.

Appendix D. Definitions for:

Remanufactured Devices.

Remanufactured Element.

Repaired Devices.

Repaired Element.

4002. – Additonal Requirements. See Barclays for actual Text

NOTE: These requirements are different than, or in addition to, the requirements of Handbook 44 and are included in the appropriate section of the text. They are shaded, bordered, and numbered in the 4002 series to differentiate them from the Handbook 44 requirements.

4002.1. General Code (1.10.)

(a) Type Approval Use.

4002.2. Scales (2.20.)

(a) Recommended Minimum Test Weights and Test Loads.
(b) Minimum Load on a Vehicle Scale.
(c) Class III, Class III L and Unmarked Devices Used for Recycling.
(d) Livestock Scales Not Equipped with Balance Indicator.
(e) Customer Indications.

4002.3. Vehicle-Tank Meters. (3.31.)

UR.2.2. Ticket Printer; Customer Ticket.

4002.4.Liquefied Petroleum Gas and Anhydrous Ammonia Liquid-Measuring Devices (3.32.)

(a) Temperature Compensation.
(b) Non-applicability of Handbook 44 under certain conditions.
(c) Wholesale Devices Equipped With Automatic Temperature Compensating Systems.
(d) Vapor Return Line.
(e) Signs.

4002.5.Hydrocarbon Gas Vapor-Measuring Devices. (3.33.)

(a) Leak Test
(b) Temperature Compensation
(c) Retention of Customer Invoices

4002.6.Farm Milk Tanks. (4.42.)

(a) Calibration and Installation.

4002.8. Liquid-Measuring Devices. (3.30.)

(a) Wholesale Devices Equipped With Automatic Temperature Compensating Systems.

NOTE: Authority cited: Sections 12027 and 12107, Business and Professions Code. Reference: Section 12107, Business and Professions Code.

Introduction

A. Source. - The specifications, tolerances, and other technical requirements published herein comprise, in their latest form, all of the current codes as adopted by the National Conference on Weights and Measures.[1] The National Conference is sponsored by the National Institute of Standards and Technology (NIST), which provides the NCWM secretariat and publishes NCWM documents. NIST also develops technical publications for use by weights and measures agencies; these publications may subsequently be endorsed or adopted by the NCWM.

The Conference Committee on Specifications and Tolerances,[2] acting at the request of the Conference or upon its own initiative, with the technical assistance of the National Institute of Standards and Technology, annually prepares proposed revisions, amendments, or additions to the material previously adopted by the Conference (see paragraph C). Such revisions, amendments, or additions are then presented to the Conference as a whole, where they are discussed by weights and measures officials and representatives of interested manufacturers and industries. Eventually the proposals of the Committee are voted upon only by the weights and measures officials.

All of the specifications, tolerances, and other technical requirements given herein are recommended by the National Conference on Weights and Measures for official promulgation in and use by the States in exercising their control of commercial weighing and measuring apparatus. A similar recommendation is made with respect to the local jurisdictions within a State in the absence of the promulgation of specifications, tolerances, and other technical requirements by a State agency.

B. Purpose. - The purpose of these technical requirements is to eliminate from use, weights and measures and weighing and measuring devices that give readings that are false, that are of such construction that they are faulty (that is, that are not reasonably permanent in their adjustment or will not repeat their indications correctly), or that facilitate the perpetration of fraud, without prejudice to apparatus that conforms as closely as practicable to the official standards.

[1] When sitting as a voting body, the National Conference on Weights and Measures (NCWM) is made up of State and local weights and measures officials from all parts of the United States. The NCWM normally meets annually.

[2] Communications to this committee may be addressed as follows: Executive Secretary, National Conference on Weights and Measures, National Institute of Standards and Technology, 100 Bureau Drive, Stop 2600, Gaithersburg, MD 20899-2600.

C. Amendments. - The Committee on Specifications and Tolerances of the NCWM provides a mechanism for consideration of amendments or additions to the specifications, tolerances, and other technical requirements. The following procedures are based on NCWM Publication 3, "Policy, Interpretations, and Guidelines" (see Section 1 - NCWM Management, Subsection 1 - Organization and Committees) that were amended at the 83rd NCWM Annual Meeting in 1998.

D. Submission of Agenda Items - Preamble. - The Constitution of the NCWM requires that its officers and Committees observe the principles of due process for the protection of the rights and interests of affected parties. Specifically, it requires that Committees and Officers: (a) give reasonable advance notice of contemplated studies, issues to be considered for action, and tentative or definite recommendations for conference vote; and (b) provide that all interested parties have an opportunity to be heard.

E. Submission Process. - Anyone introducing an issue to the Committee shall use the regional weights and measures associations to initially consider its merits. Using the regional associations ensures discussion and evaluation of issues at the grass-roots level by involving the regional members in the development, evaluation, and justification of proposals. The regions include the Central, Northeastern, Southern, and Western Weights and Measures Associations. For information on the regional associations contact NCWM, at the address listed below or, by telephone at 301-975-4004, or on the Internet at http://www.nist.gov/owm.

F. Procedures

The Committee will consider issues according to the following procedures:

a. All issues to be considered by the Committee for action at the upcoming Interim Meeting must be submitted in writing to the Committee by November 1. Although use of NCWM Form 15 is not required, it is recommended for use in submitting proposals to the NCWM. Proposals shall be sent to the Committee at:

NIST Office of Weights and Measures Division
100 Bureau Drive, Stop 2600
Gaithersburg, MD 20899-2600
Attention: Specifications and Tolerances Committee

b. A copy of the proposal must be sent to the NCWM's Executive Secretary at the same address.

G. Criteria for Inclusion in the Committee's Agenda.

a. Any issue approved by at least one regional association and received by the November 1 deadline will be automatically placed on the Committee's Interim Meeting Agenda.

b. Issues that have not been approved by a regional association, but which are received by November 1, will be evaluated by the Committee using the criteria in Section H, Exceptions to Policy and Section I, Committee Agenda.

c. Any proposal received after the November 1 deadline, but prior to the Interim Meeting, will be evaluated by the Committee according to Section H, Exceptions to Policy and Section I, Committee Agenda. Only those issues determined to be a national "Priority" will be included on its agenda.

d. Proposals must be in writing and must include:

(1) a concise statement of the issue or problem outlining the purpose and national need for its consideration. When possible, an electronic copy of the background material and proposed amendment(s) should be submitted in a PC compatible word processing document format (e.g., Corel WordPerfect or Microsoft Word) on electronic media or by electronic mail using the same format;
(Amended 2004)

(2) background material including test data, analysis of test data, or other appropriately researched and documented material from which the Committee will be able to make a judgment for either a firm recommendation or consideration of the need for further study;

(3) proposed solutions to problems stated in specific language in amendment form to Conference documents; and

(4) practical, realistic, and specific recommendations for both regulations and test methods to provide for proper enforcement, if a proposal involves a new area of weights and measures activity.

When proposals are to modify or add requirements to existing publications, such as Handbook 44, the proposal should:

(i) Identify the pertinent portion, section, and paragraph of the existing publication that would be changed (e.g., Sec. 1.10. General Code, paragraph G-A.1. Commercial and Law-Enforcement Equipment).

(ii) Provide evidence of consistency with other NCWM publications such as with other specific device code sections.

(iii) Provide evidence of consistency with Federal laws and regulations (e.g., USDA).

(iv) Relay the positions of businesses, industries, or trade associations affected by the proposal including supporting and opposing points of view.

H. Exceptions to Policy for Submission of Issues to a Committee Agenda; Submission of "Priority" Issues.

The Committee will use the following criteria to evaluate issues that have not been approved by a regional association, but has been received by the November 1 deadline. If an issue is received after the November 1 deadline, it will be included on an agenda, if the Committee determines that it is a national "Priority."

Criteria for Inclusion in the Committee's Agenda when no Regional Association has approved the Issues.

(1) Issues must have significant legal impact on weights and measures laws and/or regulations involving:

(a) court cases/attorney general opinions; or

(b) pre-emption by Federal statute or regulation; or

(c) conflict with international standards; or

(d) relationship to laws or regulations of an urgent nature which could affect health and safety.

(2) The Committee may contact parties that are potentially affected by an issue (e.g., trade associations, industry, and consumer groups) for comments. The Committee may consider these comments and any other information in determining if the issue should be included on its agenda.

(3) When the Committee determines that it should consider an issue as a "Priority" (using the criteria in (1)), the issue will be handled in the following manner:

(a) A "priority" issue received prior to the Interim Meeting may be added to the Interim Meeting agenda by majority vote of the Committee.

(b) A "priority" issue received after the Interim Meeting may be added to the Committee's Annual Meeting agenda as: (i) a discussion issue by majority vote of the Committee, or (ii) as a voting item by majority vote of the Committee and the NCWM Board of Directors.

I. Committee Agenda

a. The Committee will review issues that have been submitted and selected by majority vote to be included on its agenda. The Committee will only include those issues that have been (1) approved by at least one of the regional associations; or (2) forwarded by other committees, subcommittees, NTETC Sectors, task forces, or work groups, or those issues that meet the criteria in Section H, Exceptions to Policy.

b. The Committee will publish an agenda which identifies the issues to be discussed during the Interim Meetings. This agenda shall be distributed to members approximately 30 days prior to the meetings. The agenda will be provided upon request to all other interested parties. [See NCWM Publication 15, Policy 1.4.6.]
(Amended 1998)

J. Interim Meeting

a. The Committee shall hold public hearings at the Interim Meeting for the purpose of discussing and taking comments on all issues on its agenda.

b. Upon request, the Committee will provide the opportunity for presentations by government officials, industry representatives, consumer groups, or other interested parties during the Interim Meeting. Requests to make presentations must be received by the Committee Chairman or technical advisor at least two weeks prior to the start of the meetings.

K. Interim Meeting Report

a. Issues under consideration by the Committee, and upon which it offers comments or recommendations for Conference action during the Annual Meetings, will be included in the Committee's Interim Reports published in the Annual Meeting, Program and Committee Reports, also called the Announcement Book. [See NCWM Publication 15, Policy 1.4.6.]

b. The Annual Meeting, Program and Committee Reports will be prepared and distributed to Conference members approximately three months prior to the NCWM Annual Meeting.

L. Classifications for Agenda Items

At the Interim Meeting, the Committee can classify items for voting by the NCWM membership (indicated with a "V" after the item number in the agenda or prior to the voting session). The Committee may also decide to carry issues over as "Informational" items for further study, comment, and development (indicated with an "I" after the item number). Items marked "W" in the agenda have been withdrawn from consideration.

M. Developing Items

At the 1998 Annual Meeting, the NCWM established a process for disseminating information on items which may have merit but are insufficiently developed for Committee action. Past practice for handling these items had been to either "carry" them forward as informational items or withdraw them. Conference members felt that carrying undeveloped information items drained NCWM resources, but they also believed that withdrawn items were often prematurely discarded despite the valuable work that had gone into developing the item. The NCWM was also interested in providing a mechanism to inform parties about items that are developing in different localities or in the regional associations.

The NCWM established a new "Developing" designation to allow the Committees to notify the submitter of the item, that, while it may have merit, it may not be adequately developed for action at the national level. The NCWM agreed that "Developing" items should be submitted by the regional associations with a recommendation that they be presented as "D" items on the national agenda. The Committees will present "D" items in list format at the end of their reports and include a point of contact (including the name and telephone number of the submitter) so that interested parties can obtain additional information. No comments will be taken on a "Developing" item, <u>unless</u> the Committee agrees to receive the new information in advance of the hearing. In these cases, the Chairman will announce in advance that an item will be discussed in the session. The use of this "D" designator is seen as an item management tool, as well as a way to keep the membership informed of emerging items.
(Amended 2006)

N. Comments on Interim Reports

a. Weights and measures officials, industry representatives, and all other parties are encouraged to submit written comments on issues in the Committees' Interim Reports.

b. All comments on the Interim Meeting Reports must be submitted to the Committee along with a copy to the Executive Secretary no later than one month preceding the opening of the Annual Meeting.

O. Annual Meeting

a. The Committee will hold a public hearing at the Annual Meeting to discuss issues on its agenda.

b. Those who want to speak on an issue during the public hearings should request time from the Committee Chairman. Time limitations on presentations, the discussion of a

question, or amendments may be imposed by the Committee Chairman. (See NCWM Publication 15, Policy 1.2.3. General Conduct of the Meeting.)

P. Final Committee Reports and Conference Action

a. Following the public hearings, the Committee will prepare its final report for action by the voting membership of the Conference. Prior to the session during which it will be acted on, copies of each final report will be provided for study.

b. The Chairman of the Committee will present the final report of the Committee to the Conference body. A vote will be taken on issues, proposals, or sections in the report as circumstances require. The Conference will vote on the entire final report as presented in accordance with established Conference voting procedures. Parliamentary procedure according to Roberts Rules of Order as amended by NCWM Publication No. 1, Bylaws, will be adhered to in the presentation of and action on Standing Committee reports.
(Amended 1998)

Q. System of Paragraph Designation. - In order that technical requirements of a similar nature, or those directed to a single characteristic, may be grouped together in an orderly fashion, and to facilitate the location of individual requirements, the paragraphs of each code are divided into sections. Each section is designated by a letter and a name, and each subsection is given a letter-number designation and a side title.

The letter that appears first in a paragraph designation has a specific meaning, as follows:

G. The letter G is a prefix and indicates that the requirement is part of the General Code.

A. **Application.** These paragraphs pertain to the application of the requirements of a code.

S. **Specification.** These paragraphs relate to the design of equipment. Specification paragraphs are directed particularly to manufacturers of devices.

N. **Note.** These paragraphs apply to the official testing of devices.

T. **Tolerance.** Tolerances are performance requirements. They fix the limit of allowable error or departure from true performance or value.

Sensitivity. The sensitivity requirements, applicable only to nonautomatic-indicating scales, are performance requirements and are lettered with a T.

UR. **User Requirement.** These paragraphs are directed particularly to the owner and operator of a device. User requirements apply to the selection, installation, use, and maintenance of devices.

D. **Definitions of Terms.** A definition section appears in Appendix D to provide the definition of the terms having a special meaning.

The numerical designation after a letter follows the decimal system of paragraph identification that fixes both the relationship and the limitation of the requirements of the paragraph. For example, in the Scales Code, under Specifications, the following numerical designations occur:

S. Specifications

S.1. Design of Indicating and Recording Elements and of Recorded Representations.

S.1.1. Zero Indication.

S.1.1.1. Digital Indicating Elements.
S.1.1.2. No-Load Reference Value.

S.1.2. Value of Scale Division Units.

S.1.2.1. Weight Units.

S.1.3. Graduations.

S.1.3.1. Length.
S.1.3.2. Width.
S.1.3.3. Clear Space Between Graduations.

In this example, Paragraphs S.1.1., S.1.2., and S.1.3. are directed and limited to paragraph S.1., which pertains to the design of indicating and recording elements and of recorded representations. Paragraphs S.1.1.1. and S.1.1.2. are directly related to each other, but are limited to the design of zero indication. Likewise, paragraphs S.1.3.1., S.1.3.2., and S.1.3.3. are directly related to each other, but are limited to the design of graduations.

This Handbook conforms to the concept of primary use of SI (metric) measurements recommended in the Omnibus Trade and Competitiveness Act of 1988 by citing SI metric units before inch-pound units where both units appear together and placing separate sections containing requirements for metric units before corresponding sections containing requirements for customary units. Occasionally, a paragraph or table carries the suffix “M” because the requirement in SI units is shown as a separate statement, rather than combined with the

inch-pound units. In these few instances, separate requirements were judged to be more easily understood than attempting to combine SI and inch-pound units in a single paragraph or table. In some cases, however, trade practice is currently restricted to the use of customary units; therefore, some requirements in this Handbook will continue to specify only customary units until the Conference achieves a broad consensus on the permitted metric units.

R. Classification of Requirements. - The classification of requirements into "retroactive" and "nonretroactive" status is made in order that the requirements may be put into force and effect without unnecessary hardship and without wholesale condemnation of apparatus. Retroactive requirements are enforceable with respect to all equipment and are printed in upright Roman type. Nonretroactive requirements are those that, while clearly desirable, are not so vital that they should at once be enforced with respect to all apparatus. **Nonretroactive requirements are printed in *italic type.***

It is not expected that, after their promulgation in a given jurisdiction, nonretroactive requirements will always remain nonretroactive. It is entirely proper that a weights and measures official, following a careful analysis of existing conditions, fix reasonable periods for the continuance of the nonretroactive application of particular requirements, after which such requirements will become retroactive. These periods should be long enough to avoid undue hardship to the owners or operators of apparatus and, in the case of some requirements, should approximate the average useful life of the apparatus in question.

In order that all interested parties may have timely and ample notice of impending changes in the status of requirements, the following procedure is suggested for the official who plans to change the classification of requirements. If sufficient data are at hand to make such action feasible, publish in combination with the codes themselves the date or dates at which nonretroactive requirements are to become retroactive. In other cases, give equally effective notice at the earliest practicable date.

A nonretroactive requirement, in italic type, will indicate the year from which it should be enforced and, in some cases, the date the requirement shall be changed to retroactive status. For example, *[Nonretroactive as of 1978 and to become retroactive on January 1, 1985]*. As a general rule, each nonretroactive requirement is reviewed after it has been in effect for 10 years to determine the appropriateness of its nonretroactive status.

S. Using the Handbook. - Handbook 44 is designed to be a working tool for federal, state, and local weights and measures officials, the equipment manufacturers, installers, and service agencies/agents. As noted in General Code paragraph G-A-1. Commercial and Law-Enforcement Equipment, applicable portions of Handbook 44 may be used by the weights and measures official to test noncommercial weighing and measuring equipment upon request. Additionally, applicable language in Handbook 44 may be cited as a standard in noncommercial applications. For example, when the Handbook is referenced or cited as part of a quality system or in multiple party contract agreements where noncommercial weighing or measuring equipment is used.

The section on Fundamental Considerations (Appendix A) should be studied until its contents are well known. The General Code, with general requirements pertaining to all devices, obviously must be well known to a user of the Handbook. The makeup of the specific codes, the order of paragraph presentation, and particularly paragraph designation are worthy of careful study.

It is not deemed advisable for a user to attempt to commit to memory tolerances or tolerance tables, even though these are used frequently. For the Handbook to serve its purpose, it should be available when any of its requirements are to be applied. Direct reference is the only sure way to apply a requirement properly and to check whether other requirements may be applicable.

This Handbook supplies criteria which enables the user to determine the suitability, accuracy, and repetitive consistency of a weighing or measuring device, both in the laboratory and in the field. However, not all code sections can be appropriately applied in both settings. Since some sections are designed to be applied specifically to tests performed under laboratory conditions, it would be impractical or unrealistic to apply them to field tests. Not all tests described in the "Notes" section of the Handbook are required to be performed in the field as an official test. An inspector may officially approve or reject a device which has been tested in accordance with those sections applicable to the type of test being conducted.
(Paragraph added 1996)
(Amended 2005)

[THIS PAGE LEFT INTENTIONALLY BLANK]

Sec. 1.10. General Code

G-A. Application

G-A.1. Commercial and Law-Enforcement Equipment. - These specifications, tolerances, and other technical requirements apply as follows:

(a) To commercial weighing and measuring equipment; that is, to weights and measures and weighing and measuring devices commercially used or employed in establishing the size, quantity, extent, area, or measurement of quantities, things, produce, or articles for distribution or consumption, purchased, offered, or submitted for sale, hire, or award, or in computing any basic charge or payment for services rendered on the basis of weight or measure.

(b) To any accessory attached to or used in connection with a commercial weighing or measuring device when such accessory is so designed that its operation affects the accuracy of the device.

(c) To weighing and measuring equipment in official use for the enforcement of law or for the collection of statistical information by government agencies.

(These requirements should be used as a guide by the weights and measures official when, upon request, courtesy examinations of noncommercial equipment are made.)

G-A.2. Code Application. - This General Code shall apply to all classes of devices as covered in the specific codes. The specific code requirements supersede General Code requirements in all cases of conflict.
(Amended 1972)

G-A.3. Special and Unclassified Equipment. - Insofar as they are clearly appropriate, the requirements and provisions of the General Code and of specific codes apply to equipment failing, by reason of special design or otherwise, to fall clearly within one of the particular equipment classes for which separate codes have been established. With respect to such equipment, code requirements and provisions shall be applied with due regard to the design, intended purpose, and conditions of use of the equipment.

G-A.4. Metric Equipment. - Employment of the weights and measures of the metric system is lawful throughout the United States. These specifications, tolerances, and other requirements shall not be understood or construed as in any way prohibiting the manufacture, sale, or use of equipment designed to give results in terms of metric units. The specific provisions of these requirements and the principles upon which the requirements are based shall be applied to metric equipment insofar as appropriate and practicable. The tolerances on metric equipment, when not specified herein, shall be equivalent to those specified for similar equipment constructed or graduated in the inch-pound system.

G-A.5. Retroactive Requirements. – "Retroactive" requirements are enforceable with respect to all equipment. Retroactive requirements are printed herein in upright Roman type.

G-A.6. Nonretroactive Requirements. – "Nonretroactive" requirements are enforceable after the effective date for:

(a) devices manufactured within a State after the effective date;

(b) both new and used devices brought into a State after the effective date; and

(c) devices used in noncommercial applications which are placed into commercial use after the effective date.

Nonretroactive requirements are not enforceable with respect to devices that are in commercial service in the State as of the effective date or to new equipment in the stock of a manufacturer or a dealer in the State as of the effective date. *[Nonretroactive requirements are printed in italic type.]*
(Amended 1989)

G-A.7. Effective Enforcement Dates of Code Requirements. - Unless otherwise specified, each new or amended code requirement shall not be subject to enforcement prior to January 1 of the year following the adoption by the National Conference on Weights and Measures and publication by the National Institute of Standards and Technology.

G-S. Specifications

G-S.1. Identification. - All equipment, except weights and separate parts necessary to the measurement process but not having any metrological effect, shall be clearly and permanently marked for the purposes of identification with the following information:

(a) the name, initials, or trademark of the manufacturer or distributor;

(b) a model identifier that positively identifies the pattern or design of the device;

(1) The model identifier shall be prefaced by the word "Model," "Type," or "Pattern." These terms may be followed by the word "Number" or an abbreviation of that word. The abbreviation for the word "Number" shall, as a minimum, begin with the letter "N" (e.g., No or No.) The abbreviation for the word "Model" shall be "Mod" or "Mod." Prefix lettering may be initial capitals, all capitals, or all lower case. [Nonretroactive as of January 1, 2003]

(Added 2000) (Amended 2001, 2004 and 2006)

(c) a nonrepetitive serial number, except for equipment with no moving or electronic component parts and not built-for-purpose, software-based devices;
[Nonretroactive as of January 1, 1968]
(Amended 2003 and 2004)

(1) The serial number shall be prefaced by words, an abbreviation, or a symbol, that clearly identifies the number as the required serial number;
[Nonretroactive as of January 1, 1986]

(2) Abbreviations for the word "Serial" shall, as a minimum, begin with the letter "S," and abbreviations for the word "Number" shall, as a minimum, begin with the letter "N" (e.g., S/N, SN, Ser. No, and S. No).
[Nonretroactive as of January 1, 2001]

(d) the current software version or revision identifer for not built-for-purpose, software-based devices.
[N*onretroactive as of January 1, 2004]*

(1) The version or revision identifier shall be prefaced by words, an abbreviation, or a symbol, that clearly identifies the number as the required version or revision.
[Nonretroactive as of January 1, 2007]
(Added 2006)

(2) Abbreviations for the word "Version" shall, as a minimum, begin with the letter "V" and may be followed by the word "Number." Abbreviations for the word "Revision" shall, as a minimum, begin with the letter "R" and may be followed by the word "Number." The abbreviation for the word "Number" shall, as a minimum, begin with the letter "N" (e.g., No or No.).
[Nonretroactive as of January 1, 2007]
(Added 2006)

(e) an NTEP Certificate of Conformance (CC) number or a corresponding CC Addendum Number for devices that have a CC. The CC number or a corresponding CC Addendum Number shall be prefaced by the terms "NTEP CC," "CC," or "Approval." These terms may be followed by the term "Number" or an abbreviation of that word. The abbreviation for the word "Number" shall, as a minimum, begin with the letter "N" (e.g., No or No.).
[Nonretroactive as of January 1, 2003]
(Added 2001)

The required information shall be so located that it is readily observable without the necessity of the disassembly of a part requiring the use of any means separate from the device.
(Amended 1985, 1991, 1999, 2000, 2003, 2004 and 2006)

G-S.1.1. Location of Marking Information for Not Built-For-Purpose, Software-Based Devices. *– For not built-for-purpose, software-based devices either:*

(a) The required information in G-S.1 Identification. (a), (b), (d), and (e) shall be permanently marked or continuously displayed on the device; or

(b) The Certificate of Conformance (CC) Number shall be:

(1) permanently marked on the device;

(2) continuously displayed; or

(3) accessible through an easily recognized menu and, if necessary, a submenu. Examples of menu and submenu identification include, but are not limited to, "Help," "System Identification," "G-S.1. Identification," or "Weights and Measures Identification."

Note: *For (b), clear instructions for accessing the information required in G-S.1. (a), (b), and (d) shall be listed on the CC, including information necessary to identify that the software in the device is the same type that was evaluated.*
[Nonretroactive as of January 1, 2004]
(Added 2003) (Amended 2006)

G-S.1.2. Remanufactured Devices and Remanufactured Main Elements.

[NOT ADOPTED]

G-S.2. Facilitation of Fraud. - All equipment and all mechanisms, software, and devices attached to or used in conjunction therewith shall be so designed, constructed, assembled, and installed for use such that they do not facilitate the perpetration of fraud.
(Amended 2007)

G-S.3. Permanence. - All equipment shall be of such materials, design, and construction as to make it probable that, under normal service conditions:

(a) accuracy will be maintained,

(b) operating parts will continue to function as intended, and

(c) adjustments will remain reasonably permanent.

Undue stresses, deflections, or distortions of parts shall not occur to the extent that accuracy or permanence is detrimentally affected.

G-S.4. Interchange or Reversal of Parts. - Parts of a device that may readily be interchanged or reversed in the course of field assembly or of normal usage shall be:

(a) so constructed that their interchange or reversal will not affect the performance of the device, or

(b) so marked as to show their proper positions.

G-S.5. Indicating and Recording Elements.

G-S.5.1. General. - All weighing and measuring devices shall be provided with indicating or recording elements appropriate in design and adequate in amount. Primary indications and recorded representations shall be clear, definite, accurate, and easily read under any conditions of normal operation of the device.

G-S.5.2. Graduations, Indications, and Recorded Representations.

G-S.5.2.1. Analog Indication and Representation. Graduations and a suitable indicator shall be provided in connection with indications designed to advance continuously.

G-S.5.2.2. Digital Indication and Representation. Digital elements shall be so designed that:

(a) All digital values of like value in a system agree with one another.

(b) A digital value coincides with its associated analog value to the nearest minimum graduation.

(c) A digital value "rounds off" to the nearest minimum unit that can be indicated or recorded.

(d) A digital zero indication includes the display of a zero for all places that are displayed to the right of the decimal point and at least one place to the left. When no decimal values are displayed, a zero shall be displayed for each place of the displayed scale division.
[Nonretroactive as of January 1, 1986.]
(Amended 1973 and 1985)

G-S.5.2.3. Size and Character. - In any series of graduations, indications, or recorded representations, corresponding graduations and units shall be uniform in size and character. Graduations, indications, or recorded representations that are subordinate to or of a lesser value than others with which they are associated shall be appropriately portrayed or designated.
[Made retroactive as of January 1, 1975.]

G-S.5.2.4. Values. - If graduations, indications, or recorded representations are intended to have specific values, these shall be adequately defined by a sufficient number of figures, words, symbols, or combinations thereof, uniformly placed with reference to the graduations, indications, or recorded representations and as close thereto as practicable, but not so positioned as to interfere with the accuracy of reading.

G-S.5.2.5. Permanence. - Graduations, indications, or recorded representations and their defining figures, words, and symbols shall be of such character that they will not tend easily to become obliterated or illegible.

G-S.5.3. Values of Graduated Intervals or Increments. In any series of graduations, indications, or recorded representations, the values of the graduated intervals or increments shall be uniform throughout the series.

G-S.5.3.1. On Devices That Indicate or Record in More Than One Unit. - On devices designed to indicate or record in more than one unit of measurement, the values indicated and recorded shall be identified with an appropriate word, symbol, or abbreviation.
(Amended 1978, 1986 and 2006)

G-S.5.4. Repeatability of Indications. - A device shall be capable of repeating, within prescribed tolerances, its indications and recorded representations. This requirement shall be met irrespective of repeated manipulation of any element of the device in a manner approximating normal usage (including displacement of the indicating elements to the full extent allowed by the construction of the device and repeated operation of a locking or relieving mechanism) and of the repeated performance of steps or operations that are embraced in the testing procedure.

G-S.5.5. Money Values, Mathematical Agreement. - Any recorded money value and any digital money-value indication on a computing-type weighing or measuring device used in retail trade shall be in mathematical agreement with its associated quantity representation or indication to the nearest 1 cent of money value. This does not apply to auxiliary digital indications intended for the operator's use only, when these indications are obtained from existing analog customer indications that meet this requirement.
(Amended 1973)

G-S.5.6. Recorded Representations. - Insofar as they are appropriate, the requirements for indicating and recording elements shall also apply also to recorded representations. All recorded values shall be printed digitally.
(Amended 1975 and 2006)

(Amended 2007)

Table 1.
Representation of SI Units on Equipment Manufactured Prior to January 1, 2008, with Limited Character Sets

Name of Unit	International Symbol (common use symbol)	Representation		
		Form I	Form II	
		(double case)	(single case lower)	(single case upper)
Base SI units				
Meter	M	M	m	M
Kilogram	Kg	Kg	kg	KG
Derived SI units				
Newton	N	N	n	N
Pascal	Pa	Pa	pa	PA
Watt	W	W	w	W
Volt	V	V	v	V
degree Celsius	°C	°C	°c	°C
Other units				
liter	l or L	L	l	L
gram	G	G	g	G
metric ton	t	t	tne	TNE
bar	bar	bar	bar	BAR

G-S.5.6.1. Indicated and Recorded Representation of Units. – Appropriate abbreviations.
(Added 1977) (Amended 2007)

(a) For equipment manufactured on or after January 1, 2008, the appropriate defining symbols are shown in NIST Special Publication SP 811 "Guide for the Use of International System of Units (SI)" and Handbook 44 Appendix C – General Tables of Units of Measurement.

Note: SP 811 can be viewed or downloaded at http://physics.nist.gov/cuu/pdf/sp811.pdf or by going to http://www.nist.gov/owm and selecting Weights and Measures Publications and the link to Special Publications, Guide for the Use of the International System if Units (SI) (SP 811).
(Added 2007)

(b) The appropriate defining symbols on equipment manufactured prior to January 1, 2008, with limited character sets are shown in Table 1. Representation of SI Units on Equipment Manufactured Prior to January 1, 2008, with Limited Character Sets.
(Added 1977) (Amended 2007)

G-S.5.7. Magnified Graduations and Indications. - All requirements for graduations and indications apply to a series of graduations and an indicator magnified by an optical system or as magnified and projected on a screen.

G-S.6. Marking Operational Controls, Indications, and Features. *- All operational controls, indications, and features, including switches, lights, displays, pushbuttons, and other means, shall be clearly and definitely identified. The use of approved pictograms or symbols shall be acceptable.*
[Nonretroactive as of January 1, 1977.]
(Amended 1978, 1995)

G-S.7. Lettering. - All required markings and instructions shall be distinct and easily readable and shall be of such character that they will not tend to become obliterated or illegible.

G-S.8. Provision for Sealing Electronic Adjustable Components. *- A device shall be designed with provision(s) for applying a security seal that must be broken, or for using other approved means of providing security (e.g., data change audit trail available at the time of inspection), before any change that detrimentally affects the metrological integrity of the device can be made to any electronic mechanism.*
[Nonretroactive as of January 1, 1990.]

A device may be fitted with an automatic or a semiautomatic calibration mechanism. This mechanism shall be incorporated inside the device. After sealing, neither the mechanism nor the calibration process shall facilitate fraud.
(Added 1985) (Amended 1989, 1993)

G-S.8.1 Multiple Weighing or Measuring Elements that Share a Common Provision for Sealing. *– A change to any metrological parameter (calibration or configuration) of any weighing or measuring element shall be individually identified.*
[Nonretroactive as of January 1, 2010]

Note: For devices that utilize an electronic form of sealing, in addition to the requirements in G-S.8.1., any appropriate audit trail requirements in an applicable

specific device code also apply. Examples of identification of a change to the metrological parameters of a weighing or measuring element include, but are not limited to:

(1) a broken, missing, or replaced physical seal on an individual weighing, measuring, or indicating element or active junction box;

(2) a change in a calibration factor or configuration setting for each weighing or measuring element; or

(3) a display of the date of calibration or configuration event for each weighing or measuring element; or

(4) counters indicating the number of calibration and/or configuration events for each weighing or measuring element.

(Added 2007)

G-N. Notes

G-N.1. Conflict of Laws and Regulations. - If any particular provisions of these specifications, tolerances, and other requirements are found to conflict with existing State laws, or with existing regulations or local ordinances relating to health, safety, or fire prevention, the enforcement of such provisions shall be suspended until conflicting requirements can be harmonized; and such suspension shall not affect the validity or enforcement of the remaining provisions of these specifications, tolerances, and other requirements.

G-N.2. Testing With Nonassociated Equipment. - Tests to determine conditions, such as radio frequency interference (RFI), that may adversely affect the performance of a device shall be conducted with equipment and under conditions that are usual and customary with respect to the location and use of the device.
(Added 1976)

G-T. Tolerances

G-T.1. Acceptance Tolerances. - Acceptance tolerances shall apply to:

(a) equipment to be put into commercial use for the first time;

(b) **[NOT ADOPTED]**

(c) **[NOT ADOPTED]**

(d) **[NOT ADOPTED]**

(e) equipment undergoing type evaluation.
(Amended 1989)

G-T.2. Maintenance Tolerances. - Maintenance tolerances shall apply to equipment in actual use, except as provided in G-T.1.

G-T.3. Application. - Tolerances "in excess" and tolerances "in deficiency" shall apply to errors in excess and to errors in deficiency, respectively. Tolerances "on overregistration" and tolerances "on underregistration" shall apply to errors in the direction of overregistration and of underregistration, respectively. (See Definitions section.)

G-T.4. For Intermediate Values. - For a capacity, indication, load, value, etc., intermediate between two capacities, indications, loads, values, etc., listed in a table of tolerances, the tolerances prescribed for the lower capacity, indication, load, value, etc., shall be applied.

G-UR. User Requirements

G-UR.1. Selection Requirements.

4002.1. General Code (1.10.)

(a) Type Approval Use. Upon written authorization of the Secretary, a county sealer may allow a device to be used for commercial purposes during a type approval inspection period following initial testing.

G-UR.1.1. Suitability of Equipment. - Commercial equipment shall be suitable for the service in which it is used with respect to elements of its design, including but not limited to its weighing capacity (for weighing devices), its computing capability (for computing devices), its rate of flow (for liquid-measuring devices), the character, number, size, and location of its indicating or recording elements, and the value of its smallest unit and unit prices.
(Amended 1974)

G-UR.1.2. Environment. - Equipment shall be suitable for the environment in which it is used including but not limited to the effects of wind, weather, and RFI.
(Added 1976)

G-UR.1.3. Liquid-Measuring Devices. - To be suitable for its application, the minimum delivery for liquid-measuring devices shall be no less than 100 divisions, except that the minimum delivery for retail analog devices shall be no less than 10 divisions. Maximum division values and tolerances are stated in the specific codes.
(Added 1995)

G-UR.2. Installation Requirements.

G-UR.2.1. Installation. - A device shall be installed in accordance with the manufacturer's instructions, including any instructions marked on the device. A device installed in a fixed location shall be so installed that neither its operation nor its performance will be adversely affected by any characteristic of the foundation, supports, or any other detail of the installation.

G-UR.2.1.1. Visibility of Identification. - Equipment shall be installed in such a manner that all required markings are readily observable.
(Added 1978)

G-UR.2.2. Installation of Indicating or Recording Element. - A device shall be so installed that there is no obstruction between a primary indicating or recording element and the weighing or measuring element; otherwise there shall be convenient and permanently installed means for direct communication, oral or visual, between an individual located at a primary indicating or recording element and an individual located at the weighing or measuring element. [See also G-UR.3.3.]

G-UR.2.3. Accessibility for Inspection, Testing, and Sealing Purposes. - A device shall be located, or such facilities for normal access thereto shall be provided, to permit:

(a) inspecting and testing the device;

(b) inspecting and applying security seals to the device; and

(c) readily bringing the testing equipment of the weights and measures official to the device by customary means and in the amount and size deemed necessary by such official for the proper conduct of the test.

Otherwise, it shall be the responsibility of the device owner or operator to supply such special facilities, including such labor as may be needed to inspect, test, and seal the device, and to transport the testing equipment to and from the device, as required by the weights and measures official.
(Amended 1991)

G-UR.3. Use Requirements.

G-UR.3.1. Method of Operation. - Equipment shall be operated only in the manner that is obviously indicated by its construction or that is indicated by instructions on the equipment.

G-UR.3.2. Associated and Nonassociated Equipment. A device shall meet all performance requirements when associated or nonassociated equipment is operated in its usual and customary manner and location.
(Added 1976)

G-UR.3.3. Position of Equipment. - A device or system equipped with a primary indicating element and used in direct sales, except for prescription scales, shall be so positioned that its indications may be accurately read and the weighing or measuring operation may be observed from some reasonable "customer" and "operator" position. The permissible distance between the equipment and a reasonable customer and operator position shall be determined in each case upon the basis of the individual circumstances, particularly the size and character of the indicating element.
(Amended 1974 and 1998)

G-UR.3.4. Responsibility, Money-Operated Devices. - Money-operated devices other than parking meters shall have clearly and conspicuously displayed thereon, or immediately adjacent thereto, adequate information detailing the method for the return of monies paid when the product or service cannot be obtained. This information shall include the name, address, and phone number of the local responsible party for the device. This requirement does not apply to devices at locations where employees are present and responsible for resolving any monetary discrepancies for the customer.
(Amended 1977, 1993)

G-UR.4. Maintenance Requirements.

G-UR.4.1. Maintenance of Equipment. - All equipment in service and all mechanisms and devices attached thereto or used in connection therewith shall be continuously maintained in proper operating condition throughout the period of such service. Equipment in service at a single place of business found to be in error predominantly in a direction favorable to the device user shall not be considered "maintained in a proper operating condition."
(Amended 1973, 1991)

G-UR.4.2. Abnormal Performance. - Unstable indications or other abnormal equipment performance observed during operation shall be corrected and, if necessary, brought to the attention of competent service personnel.
(Added 1976)

G-UR.4.3. Use of Adjustments. - Weighing elements and measuring elements that are adjustable shall be adjusted only to correct those conditions that such elements are designed to control, and shall not be adjusted to compensate for defective or abnormal installation or accessories or for badly worn or otherwise defective parts of the assembly. Any faulty installation conditions shall be corrected, and any defective parts shall be renewed or suitably repaired, before adjustments are undertaken. Whenever equipment is adjusted, the adjustments shall be so made as to bring performance errors as close as practicable to zero value.

G-UR.4.4. Assistance in Testing Operations. - If the design, construction, or location of any device is such as to require a testing procedure involving special equipment or accessories or an abnormal amount of labor, such equipment, accessories, and labor shall be supplied by the owner or operator of the device as required by the weights and measures official.

G-UR.4.5. Security Seal. - A security seal shall be appropriately affixed to any adjustment mechanism designed to be sealed.

G-UR.4.6. Testing Devices at a Central Location.

(a) When devices in commercial service require special test facilities, or must be removed from service for testing, or are routinely transported for the purpose of use (e.g., vehicle-mounted devices and devices used in multiple locations), the official with statutory authority may require that the devices be brought to a central location for testing. The dealer or owner of these devices shall provide transportation of the devices to and from the test location.

(b) When the request for removal and delivery to a central test location involves devices used in submetering (e.g., electric, hydrocarbon vapor, or water meters), the owner or operator shall not interrupt the utility service to the customer or tenant except for the removal and replacement of the device. Provisions shall be made by the owner or operator to minimize inconvenience to the customer or tenant. All replacement or temporary meters shall be tested and sealed by a weights and measure official or bear a current, valid approval seal prior to use.

(Added 1994)

[THIS PAGE LEFT INTENTIONALLY BLANK]

Sec. 2.20. Scales

A. Application

A.1. General. - This code applies to all types of weighing devices other than automatic bulk-weighing systems and belt-conveyor scales. The code comprises requirements that are generally applicable to all weighing devices, and specific requirements that are applicable only to certain types of weighing devices.
(Amended 1972 and 1983)

A.2. Wheel-Load Weighers, Portable Axle-Load Weighers, and Axle-Load Scales. - The requirements for wheel-load weighers, portable axle-load weighers, and axle-load scales apply only to such scales in official use for the enforcement of traffic and highway laws or for the collection of statistical information by government agencies.

A.3. Also see General Code requirements.

S. Specifications

S.1. Design of Indicating and Recording Elements and of Recorded Representations.

S.1.1. Zero Indication.

(a) On a scale equipped with indicating or recording elements, provision shall be made to either indicate or record a zero-balance condition.

(b) On an automatic-indicating scale or balance indicator, provision shall be made to indicate or record an out-of-balance condition on both sides of zero.

(c) A zero-balance condition may be indicated by other than a continuous digital zero indication, provided that an effective automatic means is provided to inhibit a weighing operation or to return to a continuous digital indication when the scale is in an out-of-balance condition.
(Added 1987)
(Amended 1987, 1993)

S.1.1.1. Digital Indicating Elements.

(a) A digital zero indication shall represent a balance condition that is within ± 1/2 the value of the scale division.

(b) A digital indicating device shall either automatically maintain a "center-of-zero" condition to ± 1/4 scale division or less, or have an auxiliary or supplemental "center-of-zero" indicator that defines a zero-balance condition to ± 1/4 of a scale division or less.
[Nonretroactive as of January 1, 1993.]
(Amended 1992)

S.1.1.2. No-Load Reference Value. - On a single draft manually operated receiving hopper scale installed below grade, used to receive grain, and utilizing a no-load reference value, provision shall be made to indicate and record the no-load reference value prior to the gross load value.
(Added 1983)

S.1.2. Value of Scale Division Units. *- Except for batching scales and weighing systems used exclusively for weighing in predetermined amounts, the value of a scale division "d" expressed in a unit of weight shall be equal to:*

(a) 1, 2, or 5; or

(b) a decimal multiple or submultiple of 1, 2, or 5; or

Examples: Scale divisions may be 10, 20, 50, 100; or 0.01, 0.02, 0.05; or 0.1, 0.2, or 0.5, etc.

(c) a binary submultiple of a specific unit of weight.

Examples: Scale divisions may be 1/2, 1/4, 1/8, 1/16, etc.
[Nonretroactive as of January 1, 1986.]
(Amended 2006)

S.1.2.1. Weight Units. *- Except for postal scales, a digital-indicating scale shall indicate weight values using only a single unit of measure. Weight values shall be presented in a decimal format with the value of the scale division expressed as 1, 2, or 5, or a decimal multiple or submultiple of 1, 2, or 5.*
[Nonretroactive and enforceable as of January 1, 1989.]
(Added 1987)

S.1.2.2. Verification Scale Interval.

S.1.2.2.1. Class I and II Scales and Dynamic Monorail Scales. If $e \neq d$, the verification scale interval "e" shall be determined by the expression:

$$d < e \leq 10\ d$$

If the displayed division (d) is less than the verification division (e), then the verification division shall be less than or equal to 10 times the displayed division.

The value of e must satisfy the relationship, $e = 10^k$ of the unit of measure, where k being a positive or negative whole number or zero. This requirement does not apply to a Class I device with d < 1 mg where e = 1 mg. If $e \neq d$, the value of "d" shall be a decimal submultiple of "e," and the ratio shall not be more than 10:1. If $e \neq d$, and both "e" and "d" are continuously displayed during normal operation, then "d" shall be differentiated from "e" by size, shape, color, etc., throughout the range of weights displayed as "d." (Added 1999)

S.1.2.2.2. Class III and IIII. The value of "e" is pecified by the manufacturer as marked on the device. Except for dynamic monorail scales, "e" must be less than or equal to "d."
(Added 1999)

S.1.2.3. Prescription Scale with a Counting Feature. – A Class I or Class II prescription scale with an operational counting feature shall not calculate a piece weight or total count unless the sample used to determine the individual piece weight meets the following conditions:

(a) minimum individual piece weight is greater than or equal to 3 e; and

(b) minimum sample piece count is greater than or equal to 10 pieces.

(Added 2003)

S.1.3. Graduations.

S.1.3.1. Length. - Graduations shall be so varied in length that they may be conveniently read.

S.1.3.2. Width. - In any series of graduations, the width of a graduation shall in no case be greater than the width of the clear space between graduations. The width of main graduations shall be not more than 50 percent greater than the width of subordinate graduations. Graduations shall be not less than 0.2 mm (0.008 in) wide.

S.1.3.3. Clear Space Between Graduations. - The clear space between graduations shall be not less than 0.5 mm (0.02 in) for graduations representing money values, and not less than 0.75 mm (0.03 in) for other graduations. If the graduations are not parallel, the measurement shall be made:

(a) along the line of relative movement between the graduations at the end of the indicator, or

(b) if the indicator is continuous, at the point of widest separation of the graduations.

S.1.4. Indicators.

S.1.4.1. Symmetry. - The index of an indicator shall be of the same shape as the graduations, at least throughout that portion of its length associated with the graduations.

S.1.4.2. Length. - The index of an indicator shall reach to the finest graduations with which it is used, unless the indicator and the graduations are in the same plane, in which case, the distance between the end of the indicator and the ends of the graduations, measured along the line of the graduations, shall be not more than 1.0 mm (0.04 in).

S.1.4.3. Width. - The width of the index of an indicator in relation to the series of graduations with which it is used shall be not greater than:

(a) the width of the narrowest graduation, [Nonretroactive as of January 1, 2002.]

(b) the width of the clear space between weight graduations, and

(c) three-fourths of the width of the clear space between money value graduations.

When the index of an indicator extends along the entire length of a graduation, that portion of the index of the indicator that may be brought into coincidence with the graduation shall be of the same width throughout the length of the index that coincides with the graduation.

S.1.4.4. Clearance. - The clearance between the index of an indicator and the graduations shall in no case be more than 1.5 mm (0.06 in).

S.1.4.5. Parallax. - Parallax effects shall be reduced to the practicable minimum.

S.1.5. Weighbeams.

S.1.5.1. Normal Balance Position. - The normal balance position of the weighbeam of a beam scale shall be horizontal.

S.1.5.2. Travel. - The weighbeam of a beam scale shall have equal travel above and below the horizontal. The total travel of the weighbeam of a beam scale in a trig loop or between other limiting stops near the weighbeam tip shall be not less than the minimum travel shown in Tables 1M and 1. When such limiting stops are not provided, the total travel at the weigh-beam tip shall be not less than 8 percent of the distance from weighbeam fulcrum to the weighbeam tip.

Table 1M. Minimum Travel of Weighbeam of Beam Scale Between Limiting Stops	
Distance from weighbeam fulcrum to limiting stops (centimeters)	Minimum travel between limiting stops (millimeter)
30 or less	10
30+ to 50, inclusive	13
50+ to 100, inclusive	18
Over 100	23

Table 1. Minimum Travel of Weighbeam of Beam Scale Between Limiting Stops	
Distance from weighbeam fulcrum to limiting stops (inches)	Minimum travel Between limiting stops (inch)
12 or less	0.4
12+ to 20, inclusive	0.5
20+ to 40, inclusive	0.7
Over 40	0.9

S.1.5.3. Subdivision. - A subdivided weighbeam bar shall be subdivided by scale division graduations, notches, or a combination of both. Graduations on a particular bar shall be of uniform width and perpendicular to the top edge of the bar. Notches on a particular bar shall be uniform in shape and dimensions and perpendicular to the face of the bar. When a combination of graduations and notches is employed, the graduations shall be positioned in relation to the notches to indicate notch values clearly and accurately.

S.1.5.4. Readability. - A subdivided weighbeam bar shall be so subdivided and marked, and a weighbeam poise shall be so constructed, that the weight corresponding to any normal poise position can easily and accurately be read directly from the beam, whether or not provision is made for the optional recording of representations of weight.

S.1.5.5. Capacity. - On an automatic-indicating scale having a nominal capacity of 15 kg (30 lb) or less and used for direct sales to retail customers:

(a) the capacity of any weighbeam bar shall be a multiple of the reading-face capacity,

(b) each bar shall be subdivided throughout or shall be subdivided into notched intervals, each equal to the reading-face capacity; and

(c) the value of any turnover poise shall be equal to the reading-face capacity

S.1.5.6. Poise Stop. - Except on a steelyard with no zero graduation, a shoulder or stop shall be provided on each weighbeam bar to prevent a poise from traveling and remaining back of the zero graduation.

S.1.6. Poises.

S.1.6.1. General. - No part of a poise shall be readily detachable. A locking screw shall be perpendicular to the longitudinal axis of the weighbeam and shall not be removable. Except on a steelyard with no zero graduation, a poise shall not be readily removable from a weighbeam. The knife edge of a hanging poise shall be hard and sharp and so constructed as to allow the poise to swing freely on the bearing surfaces in the weighbeam notches.

S.1.6.2. Adjusting Material. - The adjusting material in a poise shall be securely enclosed and firmly fixed in position; if softer than brass, it shall not be in contact with the weighbeam.

S.1.6.3. Pawl. - A poise, other than a hanging poise, on a notched weighbeam bar shall have a pawl that will seat the poise in a definite and correct position in any notch, wherever in the notch the pawl is placed, and hold it there firmly and without appreciable movement. The dimension of the tip of the pawl that is transverse to the longitudinal axis of the weighbeam shall be at least equal to the corresponding dimension of the notches.

S.1.6.4. Reading Edge or Indicator. - The reading edge or indicator of a poise shall be sharply defined, and a reading edge shall be parallel to the graduations on the weighbeam.

S.1.7. Capacity Indication, Weight Ranges, and Unit Weights.

(a) Gross Capacity. An indicating or recording element shall not display nor record any values when the gross load (not counting the initial dead load that has been canceled by an initial zero-setting mechanism) is in excess of 105 percent of scale capacity.

(b) Capacity Indication. Electronic computing scales (excluding postal scales and weight classifiers) shall neither display nor record a gross or net weight in excess of scale capacity plus 9d.

The total value of weight ranges and of unit weights in effect or in place at any time shall automatically be accounted for on the reading face and on any recorded representation.

This requirement does not apply to: (1) single-revolution dial scales, (2) multi-revolution dial scales not equipped with unit weights, (3) scales equipped with two or more weighbeams, nor (4) devices that indicate mathematically derived totalized values.
[Nonretroactive as of January 1, 1993.]
(Amended 1990, 1992, and 1995)

S.1.8. Computing Scales.

S.1.8.1.M. Money-Value Graduations, Metric Unit Prices. - The value of the graduated intervals representing money values on a computing scale with analog indications shall not exceed:

(a) 1 cent at all unit prices of 55 cents per kilogram and less;

(b) 2 cents at unit prices of 56 cents per kilogram through $2.75 per kilogram (special graduations defining 5-cent intervals may be employed but not in the spaces between regular graduations);

(c) 5 cents at unit prices of $2.76 per kilogram through $7.50 per kilogram; or

(d) 10 cents at unit prices above $7.50 per kilogram.

Value figures and graduations shall not be duplicated in any column or row on the graduated chart. (See also S.1.8.2.)

S.1.8.1. Money-Value Graduations, Inch-Pound Unit Prices. - The value of the graduated intervals representing money values on a computing scale with analog indications shall not exceed:

(a) 1 cent at all unit prices of 25 cents per pound and less;

(b) 2 cents at unit prices of 26 cents per pound through $1.25 per pound (special graduations defining 5-cent intervals may be employed but not in the spaces between regular graduations);

(c) 5 cents at unit prices of $1.26 per pound through $3.40 per pound; or

(d) 10 cents at unit prices above $3.40 per pound.

Value figures and graduations shall not be duplicated in any column or row on the graduated chart. (See also S.1.8.2.)

S.1.8.2. Money-Value Computation. - A computing scale with analog quantity indications used in retail trade may compute and present digital money values to the nearest quantity graduation when the value of the minimum graduated interval is 0.005 kg (0.01 lb) or less. (Also see Sec. 1.10; G-S.5.5.)

S.1.8.3. Customer's Indications.

[NOT ADOPTED]

4002.2. Scales (2.20.)

(e) Customer's Indications. Weight indications shall be shown on the customer's side of computing scales when these are used for direct sales to retail customers. Computing scales equipped on the operator's side with digital indications, such as the net weight, unit price, or total price, shall be similarly equipped on the customer's side. *Unit price displays visible to the customer shall be in terms of whole units of weight, and not in common or decimal fractions.*
[Nonretroactive May 9, 1996.]

S.1.8.3.1. *Scales that will function as either a normal round off scale or as a weight classifier shall be provided with a sealable means for selecting the mode of operation and shall have a clear indication (annunciator), adjacent to the weight display on both the operator's and customer's side whenever the scale is operating as a weight classifier.*
[Nonretroactive as of January 1, 2001]
(Added 1999)

S.1.8.4. Recorded Representations, Point-of-Sale Systems. - The sales information recorded by cash registers when interfaced with a weighing element shall contain the following information for items weighed at the checkout stand:

(a) the net weight,[1]

(b) the unit price,[1]

[1] For devices interfaced with scales indicating in metric units, the unit price may be expressed in price per 100 grams. Weight values shall be identified by kilogram, kg, grams, g, ounces, oz, pound, or lb. *The "#" symbol is not acceptable.*
[Nonretroactive as of January 1, 2006]
(Amended 1995 and 2005)

(c) the total price, and

(d) the product class or, in a system equipped with price look-up capability, the product name or code number.

S.1.9. Prepackaing Scales.

S.1.9.1. Value of the Scale Division. - On a pre-packaging scale, the value of the intervals representing weight values shall be uniform throughout the entire reading face. The recorded weight values shall be identical with those on the indicator.

S.1.9.2. Label Printer. - A prepackaging scale or a device that produces a printed ticket to be used as the label for a package shall print all values digitally and of such size, style of type, and color as to be clear and conspicuous on the label.

S.1.10. Adjustable Components. - An adjustable component such as a pendulum, spring, or potentiometer shall be held securely in adjustment and, except for a zero-load balance mechanism, shall be located within the housing of the element.
(Added 1986)

S.1.11. Provision for Sealing.

(a) Except on Class I scales, provision shall be made for applying a security seal in a manner that requires the security seal to be broken before an adjustment can be made to any component affecting the performance of an electronic device.
[Nonretroactive as of January 1, 1979.]

(b) Except on Class I scales, a device shall be designed with provision(s) for applying a security seal that must be broken, or for using other approved means of providing security (e.g., data change audit trail available at the time of inspection), before any change that detrimentally affects the metrological integrity of the device can be made to any electronic mechanism.
[Nonretroactive as of January 1, 1990.]

(c) Except on Class I scales, audit trails shall use the format set forth in Table S.1.11.
[Nonretroactive as of January 1, 1995.]

A device may be fitted with an automatic or a semi-automatic calibration mechanism. This mechanism shall be incorporated inside the device. After sealing, neither the mechanism nor the calibration process shall facilitate fraud.
(Amended 1989, 1991, 1993)

S.1.12. Manual Weight Entries. - *A device when being used for direct sale shall accept an entry of a manual gross or net weight value only when the scale gross or net* weight indication is at zero. Recorded manual weight entries, except those on labels generated for packages of standard weights, shall identify the weight value as a manual weight entry by one of the following terms: "Manual Weight," "Manual Wt," or "MAN WT." The use*

Table S.1.11. Categories of Device and Methods of Sealing

Categories of Device	*Method of Sealing*
Category 1: No remote configuration capability.	*Seal by physical seal or two event counters: one for calibration parameters and one for configuration parameters.*
Category 2: Remote configuration capability, but access is controlled by physical hardware. *Device shall clearly indicate that it is in the remote configuration mode and record such message if capable of printing in this mode.*	*The hardware enabling access for remote communication must be at the device and sealed using a physical seal or two event counters: one for calibration parameters and one for configuration parameters.*
Category 3: Remote configuration capability access may be unlimited or controlled through a software switch (e.g., password).	*An event logger is required in the device; it must include an event counter (000 to 999), the parameter ID, the date and time of the change, and the new value of the parameter. A printed copy of the information must be available through the device or through another on-site device. The event logger shall have a capacity to retain records equal to ten times the number of sealable parameters in the device, but not more than 1000 records are required.* ***(Note: Does not require 1000 changes to be stored for each parameter.)***

[Nonretroactive as of January 1, 1995.]
(Table added 1993)

of a symbol to identify multiple manual weight entries on a single document is permitted, provided that the symbol is defined on the same page on which the manual weight entries appear and the definition of the symbol is automatically printed by the recording element as part of the document.
[Nonretroactive as of January 1, 1993]
*[*Nonretroactive as of January 1, 2005]*
(Added 1992) (Amended 2004)

S.1.13. Vehicle On-Board Weighing Systems: Vehicle in Motion. - When the vehicle is in motion, a vehicle on-board weighing system shall either:

(a) be accurate; or

(b) inhibit the weighing operation.
(Added 1993)

S.2. Design of Balance, Tare, Level, Damping, and Arresting Mechanisms.

S.2.1. Zero-Load Adjustment.

S.2.1.1. General. - A scale shall be equipped with means by which the zero-load balance may be adjusted. Any loose material used for this purpose shall be enclosed so that it cannot shift in position and alter the balance condition of the scale.

S.2.1.2. Scales Used in Direct Sales. - A manual zero-setting mechanism (except on a digital scale with an analog zero-adjustment mechanism with a range of not greater than one scale division) shall be operable or accessible only by a tool outside of and entirely separate from this mechanism, or it shall be enclosed in a cabinet. Except on Class I or II scales, a balance ball shall either meet this requirement or not itself be rotatable.

A semiautomatic zero-setting mechanism shall be operable or accessible only by a tool outside of and separate from this mechanism or it shall be enclosed in a cabinet, or it shall be operable only when the indication is stable within:

(a) plus or minus 3 scale divisions for scales of more than 2 000 kg (5 000 lb) capacity in service prior to January 1, 1981, and for all axle-load, railway track, and vehicle scales; or

(b) plus or minus 1 scale division for all other scales.

S.2.1.3. Scales Equipped with an Automatic Zero-Tracking Mechanism. -

S.2.1.3.1. Automatic Zero-Tracking Mechanism for Scales Manufactured Between January 1, 1981 and January 1, 2007. – The maximum load that can be "rezeroed," when either placed on or removed from the platform all at once under normal operating conditions, shall be:

(a) for bench, counter, and livestock scales: 0.6 scale division;

(b) for vehicle, axle-load, and railway track scales: 3.0 scale divisions; and

(c) for all other scales: 1.0 scale division.
(Amended 2005)

S.2.1.3.2. Automatic Zero-Tracking Mechanism for Scales Manufactured on or after January 1, 2007. – The maximum load that can be "rezeroed," when either placed on or removed from the platform all at once under normal operating conditions, shall be:

(a) for vehicle, axle-load, and railway track scales: 3.0 scale divisions; and

(b) for all other scales: 0.5 scale division.
(Added 2005)

S.2.1.3.3. Means to Disable Automatic Zero-Tracking Mechanism On Class III L Devices. - *Class III L devices equipped with an automatic zero-tracking mechanism shall be designed with a sealable means that would allow zero tracking to be disabled during the inspection and test of the device.*
[Nonretroactive as of January 1, 2001]
(Added 1999) (Amended 2005 and 2006)

S.2.1.4. Monorail Scales. - On a static monorail scale equipped with digital indications, means shall be provided for setting the zero-load balance to within 0.02 percent of scale capacity. On a dynamic monorail weighing system, means shall be provided to automatically maintain these conditions.
(Amended 1999)

S.2.1.5. Initial Zero-Setting Mechanism.

(a) Scales of accuracy Classes I, II, and III may be equipped with an initial zero-setting device.

(b) An initial zero-setting mechanism shall not zero a load in excess of 20 percent of the maximum capacity of the scale unless tests show that the scale meets all applicable tolerances for any amount of initial load compensated by this device within the specified range.
(Added 1990)

S.2.1.6. Combined Zero-Tare ("O/T") Key. - Scales not intended to be used in direct sales applications may be equipped with a combined zero and tare function key, provided that the device is clearly marked as to how the key functions. The device must also be clearly marked on or adjacent to the weight display with the statement "Not for Direct Sales."
(Added 1998)

S.2.2. Balance Indicator. - On a balance indicator consisting of two indicating edges, lines, or points, the ends of the indicators shall be sharply defined. When the scale is in balance, the ends shall be separated by not more than 1.0 mm (0.04 in).

S.2.2.1. Dairy-Product-Test, Grain-Test, Prescription, and Class I and II Scales. – Except on digital indicating devices, a dairy-product-test, grain-test, prescription, or Class I or II scale shall be equipped with a balance indicator. If an indicator and a graduated scale are not in the same plane, the clearance between the indicator and the graduations shall be not more than 1.0 mm (0.04 in).

***S.2.2.2. Equal-Arm Scale**. - An equal-arm scale shall be equipped with a balance indicator. If the indicator and balance graduation are not in the same plane, the clearance between the indicator and the balance graduation shall be not more than 1.0 mm (0.04 in).*
[Nonretroactive as of January 1, 1989.]
(Added 1988)

S.2.3. Tare. - *On any scale (except a monorail scale equipped with digital indications), the value of the tare division shall be equal to the value of the scale division.** The tare mechanism shall operate only in a backward direction (that is, in a direction of underregistration) with respect to the zero-load balance condition of the scale. *A device designed to automatically clear any tare value shall also be designed to prevent the automatic clearing of tare until a complete transaction has been indicated.**
(Amended 1985)

*[Note: On a computing scale, this requires the input of a unit price, the display of the unit price, and a computed positive total price at a readable equilibrium. Other devices require a complete weighing operation, including tare, net, and gross weight determination.]**
*[*Nonretroactive as of January 1, 1983.]*

S.2.3.1. Monorail Scales Equipped with Digital Indications. - On a static monorail weighing system equipped with digital indications, means shall be provided for setting any tare value of less than 5 percent of the scale capacity to within 0.02 percent of scale capacity. On a dynamic monorail weighing system, means shall be provided to automatically maintain this condition.
(Amended 1999)

S.2.4. Level-Indicating Means. - Except for portable wheel-load weighers and portable axle-load scales, a portable scale shall be equipped with level-indicating means if its weighing performance is changed by an amount greater than the appropriate acceptance tolerance when it is moved from a level position and rebalanced in a position that is out-of-level in any upright direction by 5 percent (approximately 3 degrees). The level-indicating means shall be readable without removing any scale parts requiring a tool.

[This requirement is nonretroactive and enforceable as of January 1, 1986, for prescription, jewelers', and dairy-product-test scales and scales marked I and II.]

[Note: Portable wheel-load weighers and portable axle-load scales shall be accurate when placed out-of-level up to and including 5 percent (approximately 3 degrees).]
(Amended 1991)

S.2.4.1. Vehicle On-Board Weighing Systems. - A vehicle on-board weighing system shall operate within tolerance when the weighing system is out-of-level up to 3 degrees or 5 percent. If the accuracy of the system is affected by out-of-level conditions normal to the use of the device, the system shall be equipped with an out-of-level sensor that inhibits the weighing operation when the system is out-of-level to the extent that the accuracy limits are exceeded.
(Added 1992)

S.2.5. Damping Means. - An automatic-indicating scale and a balance indicator shall be equipped with effective means to damp oscillations and to bring the indicating elements quickly to rest.

S.2.5.1. Digital Indicating Elements. - Digital indicating elements equipped with recording elements shall be equipped with effective means to permit the recording of weight values only when the indication is stable within:

(a) plus or minus 3 scale divisions for scales of more than 2000 kg (5000 lb) capacity in service prior to January 1, 1981, hopper (other than grain hopper) scales with a capacity exceeding 22 000 kg (50 000 lb), and for all vehicle, axle load, livestock, and railway track scales;

(b) plus or minus 1 scale division for all other scales.

The values recorded shall be within applicable tolerances.

S.2.5.2. Jewelers', Prescription, and Class I and Class II Scales. - A jewelers', prescription, Class I, or Class II scale shall be equipped with appropriate means for arresting the oscillation of the mechanism.

S.2.5.3. Class I and Class II Prescription Scales with a Counting Feature. – A Class I or Class II prescription scale shall indicate to the operator when the piece weight computation is complete by a stable display of the quantity placed on the load receiving element.
(Added 2003)

S.3. Design of Load-Receiving Elements.

S.3.1. Travel of Pans of Equal-Arm Scale. - The travel between limiting stops of the pans of a nonautomatic-indicating equal-arm scale not equipped with a balance indicator shall be not less than the minimum travel shown in Tables 2M and 2.

Table 2M. Minimum Travel of Pans of Nonautomatic Indicating Equal-Arm Scale Without Balance Indicator	
Nominal capacity (kilograms)	Minimum travel of pans (millimeters)
2 or less	9
2+ to 5, inclusive	13
5+ to 12, inclusive	19
Over 12	25

Table 2. Minimum Travel of Pans of Nonautomatic Indicating Equal-Arm Scale Without Balance Indicator	
Nominal capacity (pounds)	Minimum travel of pans (inch)
4 or less	0.35
4+ to 12, inclusive	0.5
12+ to 26, inclusive	0.75
Over 26	1.0

S.3.2. Drainage. - A load-receiving element intended to receive wet commodities shall be so constructed as to drain effectively.

S.3.3. Scoop Counterbalance. - A scoop on a scale used for direct sales to retail customers shall not be counter-balanced by a removable weight. A permanently attached scoop-counterbalance shall indicate clearly on both the operator's and customer's sides of the scale whether it is positioned for the scoop to be on or off the scale.

S.4. Design of Weighing Elements.

S.4.1. Antifriction Means. - Frictional effects shall be reduced to a minimum by suitable antifriction elements. Opposing surfaces and points shall be properly shaped, finished, and hardened. A platform scale having a frame around the platform shall be equipped with means to prevent interference between platform and frame.

S.4.2. Adjustable Components. - An adjustable component such as a nose-iron or potentiometer shall be held securely in adjustment. The position of a nose-iron on a scale of more than 1 000 kg (2 000 lb) capacity, as determined by the factory adjustment, shall be accurately, clearly, and permanently defined.
(Amended 1986)

S.4.3. Multiple Load-Receiving Elements. - Except for mechanical bench and counter scales, a scale with a single indicating or recording element, or a combination indicating-recording element, that is coupled to two or more load-receiving elements with independent weighing systems, shall be provided with means to prohibit the activation of any load-receiving element (or elements) not in use, and shall be provided with automatic means to indicate clearly and definitely which load-receiving element (or elements) is in use.

S.5. Design of Weighing Devices, Accuracy Class.

S.5.1. Designation of Accuracy Class. - *Weighing devices are divided into accuracy classes and shall be designated as I, II, III, III L, or IIII.*
[Nonretroactive as of January 1, 1986.]

S.5.2. Parameters for Accuracy Class. - *The accuracy class of a weighing device is designated by the manufacturer and shall comply with parameters shown in Table 3.*
[Nonretroactive as of January 1, 1986.]

S.5.3. Multi-Interval and Multi-Range Scales, Division Value. - On a multi-interval scale and multiple range scale, the value of "e" shall be equal to the value of "d."[2]
(Added 1986) (Amended 1995)

[2] See Footnote 1 to Table 3, Parameters for Accuracy Classes.

S.5.4. Relationship of Load Cell Verification Interval Value to the Scale Division. *- The relationship of the value for the load cell verification scale interval, v_{min}, to the scale division, d, for a specific scale installation using NTEP load cells shall comply with the following formulae where N is the number of load cells in the scale (such as hopper or vehicle scale weighing/load-receiving elements):*

(a) $v_{min} \leq \frac{d^*}{\sqrt{N}}$ *for scales without lever systems; and*

(b) $v_{min} \leq \frac{d^*}{\sqrt{N}\ x\,(scale\ multiple)}$ *for scales with lever systems.*

*[*When the value of the scale division, d, is different from the verification scale division, e, for the scale, the value of e must be used in the formulae above.]*

This requirement does not apply to complete weighing/ load-receiving scales, which satisfy all the following criteria:

- *The complete weighing/load-receiving element or scale has been evaluated for compliance with T.N.8.1. Temperature under the National Type Evaluation Program (NTEP);*

- *The complete weighing/load-receiving element or scale has received an NTEP Certificate of Conformance; and*

- *The complete weighing/load-receiving element or scale is equipped with an automatic zero-tracking mechanism which cannot be made inoperative in the normal weighing mode. (A test mode which permits the disabling of the automatic zero-tracking mechanism is permissible, provided the scale cannot function normally while in this mode.)*

[Nonretroactive as of January 1, 1994.]
(Added 1993) (Amended 1996 and 2006)

S.6. Marking Requirements. [See also G-S.1., G-S.4., G-S.6., G-S.7., G-UR.2.1.1., and UR.3.4.1.]

S.6.1. Nominal Capacity; Vehicle and Axle-Load Scales. *- For all vehicle and axle-load scales, the marked nominal capacity shall not exceed the concentrated load capacity (CLC) times the quantity of the number of sections in the scale minus 0.5.*

As a formula, this is stated as

nominal capacity $\leq$ CLC x (N - 0.5)

where N = the number of sections in the scale.

(See N.1.3.4. and T.N.3.1.)
[Nonretroactive as of January 1, 1989.]

[**Note:** When the device is used in a combination railway track and vehicle weighing application, the above formula shall apply only to the vehicle scale application.]
(Added 1988) (Amended 1999 and 2002)

S.6.2. Location of Marking Information. - Scales that are not permanently attached to an indicating element, and for which the load-receiving element is the only part of the weighing/load-receiving element visible after installation, may have the marking information required in G-S.1. of the General Code and S.6. of the Scales Code located in an area that is accessible only through the use of a tool; provided that the information is easily accessible (e.g., the information may appear on the junction box under an access plate). The identification information for these scales shall be located on the weighbridge (load-receiving element) near the point where the signal leaves the weighing element or beneath the nearest access cover.
(Added 1989)

S.6.3. Scales, Main Elements, and Components of Scales or Weighing Systems. - Scales, main elements of scales when not contained in a single enclosure for the entire scale, load cells for which Certificates of Conformance (CC) have been issued under the National Type Evaluation Program, and other equipment necessary to a weighing system, but having no metrological effect on the weighing system, shall be marked as specified in Table S.6.3.a. and explained in the accompanying notes (Table S.6.3.b.).
(Added 1990)

S.6.4. Railway Track Scales. - A railway track scale shall be marked with the maximum capacity of each section of the load-receiving element of the scale. Such marking shall be accurately and conspicuously presented on, or adjacent to, the identification or nomenclature plate that is attached to the indicating element of the scale. *The nominal capacity of a scale with more than two sections shall not exceed twice its rated section capacity. The nominal capacity of a two-section scale shall not exceed its rated section capacity.*
[Nonretroactive as of January 1, 2002]
(Amended 1988 and 2001)

S.6.5. Livestock Scales. - A livestock scale manufactured prior to January 1, 1989 or after January 1, 2003 shall be marked with the maximum capacity of each section of the load-receiving element of the scale. Livestock scales manufactured between January 1, 1989 and January 1, 2003 shall be marked with either the Concentrated Load Capacity (CLC) or the Section Capacity. Such marking shall be accurately and conspicuously presented on, or adjacent to the identification or nomenclature plate that is attached to the indicating element of the scale. *The nominal capacity of a scale with more than two sections shall not exceed twice its rated section capacity. The nominal capacity of a two-section scale shall not exceed its rated section capacity*.*
*[*Nonretroactive as of January 1, 2003]*

See also Note 14 in Table S.6.3.b.
(Added 2002) (Amended 2003)

S.6.6. Counting Feature, Minimum Individual Piece Weight and Minimum Sample Piece Count. – A Class I or Class II prescription scale with an operational counting feature shall be marked with the minimum individual piece weight and minimum number of pieces used in the sample to establish an individual piece weight.
(Added 2003)

N. Notes

N.1. Test Procedures.

N.1.1. Increasing-Load Test. - The increasing-load test shall be conducted on all scales with the test loads approximately centered on the load-receiving element of the scale, except on a scale having a nominal capacity greater than the total available known test load. When the total test load is less than the nominal capacity, the test load is used to greatest advantage by concentrating it, within prescribed load limits, over the main load supports of the scale.

N.1.2. Decreasing-Load Test (Automatic Indicating Scales). - The decreasing-load test shall be conducted with the test load approximately centered on the load-receiving element of the scale.

Table 3 *Parameters for Accuracy Classes*			
Class	*Value of the verification scale division (d or e[1])*	*Number of scale[4] divisions (n)*	
		Minimum	*Maximum*
SI Units			
I	*equal to or greater than 1 mg*	*50 000*	------
II	*1 to 50 mg, inclusive*	*100*	*100 000*
	equal to or greater than 100 mg	*5000*	*100 000*
III[2, 5]	*0.1 to 2 g, inclusive*	*100*	*10 000*
	equal to or greater than 5 g	*500*	*10 000*
III L[3]	*equal to or greater than 2 kg*	*2000*	*10 000*
IIII	*equal to or greater than 5 g*	*100*	*1 200*
INCH-POUND Units			
III[5]	*0.0002 lb to 0.005 lb, inclusive*	*100*	*10 000*
	0.005 oz to 0.125 oz, inclusive	*100*	*10 000*
	equal to or greater than 0.01 lb	*500*	*10 000*
	equal to or greater than 0.25 oz	*500*	*10 000*
III L[3]	*equal to or greater than 5 lb*	*2 000*	*10 000*
IIII	*greater than 0.01 lb*	*100*	*1 200*
	greater than 0.25 oz	*100*	*1 200*

[1] *For Class I and II devices equipped with auxiliary reading means (i.e., a rider, a vernier, or a least significant decimal differentiated by size, shape, or color), the value of the verification scale division "e" is the value of the scale division immediately preceding the auxiliary means.*

[2] *A scale marked "For prescription weighing only" may have a verification scale division (e) not less than 0.01 g.* (Added 1986) (Amended 2003)

[3] *The value of a scale division for crane and hopper (other than grain hopper) scales shall be not less than 0.2 kg (0.5 lb). The minimum number of scale divisions shall be not less than 1000.*

[4] *On a multiple range or multi-interval scale the number of divisions for each range independently shall not exceed the maximum specified for the accuracy class. The number of scale divisions, n, for each weighing range is determined by dividing the scale capacity for each range by the verification scale division, e, for each range. On a scale system with multiple load receiving elements and multiple indications, each element considered shall not independently exceed the maximum specified for the accuracy class. If the system has a summing indicator, the* n_{max} *for the summed indication shall not exceed the maximum specified for the accuracy class.*

[5] *The minimum number of scale divisions for a Class III Hopper Scale used for weighing grain shall be 2000. (Added 2004)*

[Nonretroactive as of January 1, 1986.]
(Amended 1986, 1987, 1997, 1998, 1999, 2000 and 2004)

Table S.6.3.a.
Marking Requirements

To Be Marked With	Weighing Equipment				
	Weighing, load-receiving, and indicating element in same housing or covered on the same CC[1]	Indicating element not permanently attached to weighing and load-receiving element or covered by a separate CC	Weighing and load-receiving element not permanently attached to indicating element or covered by a separate CC	Load cell with CC (11)	Other equipment or device (10)
Manufacturer's ID (1)	x	x	x	x	x
Model Designation and Prefix (1)	x	x	x	x	x
Serial Number and Prefix (2)	x	x	x	x	x (16)
Certificate of Conformance Number (CC) (23)	x	x	x	x	x (23)
Accuracy Class (17)	x	x (8)	x (19)	x	
Nominal Capacity (3)(18)(20)	x	x	x		
Value of Scale Division, "d" (3)	x	x			
Value of "e" (4)	x	x			
Temperature Limits (5)	x	x	x	x	
Concentrated Load Capacity (CLC) (12)(20)(22)		x	x (9)		
Special Application (13)	x	x	x		
Maximum Number of Scale Divisions (n_{max}) (6)		x (8)	x (19)	x	
Minimum Verification Scale Division (e_{min})			x (19)		
"S" or "M" (7)				x	
Direction of Loading (15)				x	
Minimum Dead Load				x	
Maximum Capacity				x	
Safe Load Limit				x	
Load Cell Verification Interval (v_{min}) (21)				x	
Section Capacity and Prefix (14)(20)(22)(24)		x	x		

Note: For applicable notes, see Table S.6.3.b.

[1] Weighing/load receiving elements and indicators which are in the same housing or which are permanently attached will generally appear on the same CC. If not in the same housing, elements shall be hard wired together or sealed with a physical seal or an electronic link. This requirement does not apply to peripheral equipment that has no input or effect on device calibrations or configurations.
(Added Footnote 1, 2001)

(Added 1990) (Amended 1992, 1999, 2000, 2001, 2002 and 2004)

Table S.6.3.b.

Notes For Table S.6.3.a

1. Manufacturer's identification and model designation and *model designation prefix**.
**[Nonretroactive as of January 1, 2003.]*
(See G-S.1.) *[Prefix lettering may be initial capitals, all capitals or all lower case.]*
(Amended 2000)

2. *Serial number [Nonretroactive as of January 1, 1968] and prefix [Nonretroactive as of January 1, 1986].*
(See G-S.1.)

3. The device shall be marked with the nominal capacity. *The nominal capacity shall be shown together with the value of the scale division (e.g., 15 x 0.005 kg, 30 x 0.01 lb, or capacity = 15 kg, d = 0.005 kg) in a clear and conspicuous manner and be readily apparent when viewing the reading face of the scale indicator unless already apparent by the design of the device. Each scale division value or weight unit shall be marked on multiple range or multi-interval scales.*
[Nonretroactive as of January 1, 1983]
(Amended 2005)

4. *Required only if different from "d."*
[Nonretroactive as of January 1, 1986.]

5. *Required only on Class III, III L, and IIII devices if the temperature range on the NTEP CC is narrower then and within –10 °C to 40 °C (14 °F to 104 °F).*
[Nonretroactive as of January 1, 1986.]

6. *This value may be stated on load cells in units of 1 000; e.g., n: 10 is 10 000 divisions.*
[Nonretroactive as of January 1, 1988.]

7. *Denotes compliance for single or multiple load cell applications. It is acceptable to use a load cell with the "S" or Single Cell designation in multiple load cell applications as long as all other parameters meet applicable requirements. A load cell with the "M" or Multiple Cell designation can be used only in multiple load cell applications.*
[Nonretroactive as of January 1, 1988.]
(Amended 1999)

8. *An indicating element not permanently attached to a weighing element shall be clearly and permanently marked with the accuracy Class of I, II, III, III L, or IIII, as appropriate, and the maximum number of scale divisions, n_{max},, for which the indicator complies with the applicable requirement. Indicating elements that qualify for use in both Class III and III L applications may be marked III/III L and shall be marked with the maximum number of scale divisions for which the device complies with the applicable requirements for each accuracy class.*
[Nonretroactive as of January 1, 1988.]

9. *For vehicle and axle-load scales only. The CLC shall be added to the load-receiving element of any such scale not previously marked at the time of modification.*
[Nonretroactive as of January 1, 1989.]
(Amended 2002)

10. Necessary to the weighing system but having no metrological effect, e.g., auxiliary remote display, keyboard, etc.

11. *The markings may be either on the load cell or in an accompanying document; except that, if an accompanying document is provided, the serial number shall appear both on the load cell and in the document.* *[Nonretroactive as of January 1, 1988.]* *The manufacturer's name or trademark, the model designation, and identifying symbol for the serial number shall also be marked both on the load cell and in any accompanying document.*
[Nonretroactive as of January 1, 1991.]

12. Required on the indicating element *and the load-receiving element* of vehicle and axle-load scales. *Such marking shall be identified as "concentrated load capacity" or by the abbreviation "CLC".**
*[*Nonretroactive as of January 1, 1989.]*
(Amended 2002)

13. *A scale designed for a special application rather than general use shall be conspicuously marked with suitable words, visible to the operator and to the customer, restricting its use to that application, e.g., postal scale, prepack scale, weight classifier, etc.** When a scale is installed with an operational counting feature, the scale shall be marked on both the operator and customer sides with the statement "The counting feature is not legal for trade," except when a Class I or Class II prescription scale complies with all Handbook 44 requirements applicable to counting features.
*[*Nonretroactive as of January 1, 1986.]*
(Amended 1994 and 2003)

14. Required on *livestock** and railway track scales. When marked on vehicle and axle-load scales manufactured before January 1, 1989, it may be used as the CLC. For livestock scales manufactured between January 1, 1989 and January 1, 2003, required markings may be either CLC or section capacity.
*[*Nonretroactive as of January 1, 2003.]*
(Amended 2002 and 2003)

Table S.6.3.b.

Notes For Table S.6.3.a. (Continued)

15. *Required if the direction of loading the load cell is not obvious.*
[Nonretroactive as of January 1, 1988.]

16. *Serial number [Nonretroactive as of January 1, 1968] and prefix [Nonretroactive as of January 1, 1986].* (See G-S.1.) Modules without "intelligence" on a modular system (e.g., printer, keyboard module, cash drawer, and secondary display in a point-of-sale system) are not required to have serial numbers.

17. *The accuracy Class of a device shall be marked on the device with the appropriate designation as I, II, III, III L, or IIII.*
[Nonretroactive as of January 1, 1986.]

18. The nominal capacity shall be conspicuously marked as follows:

(a) on any scale equipped with unit weights or weight ranges;
(b) on any scale with which counterpoise or equal-arm weights are intended to be used;
(c) on any automatic-indicating or recording scale so constructed that the capacity of the indicating or recording element, or elements, is not immediately apparent;
(d) on any scale with a nominal capacity less than the sum of the reading elements; and
*(e) on the load-receiving element (weighbridge) of vehicle, axle-load, and livestock scales.**
*[*Nonretroactive as of January 1, 1989.]*

19. *Nonretroactive as of January 1, 1988.*
(Amended 1992)

20. *Combination vehicle/railway track scales must be marked with both the nominal capacity and CLC for vehicle weighing and the nominal capacity and section capacity for railway weighing. All other requirements relating to these markings will apply.*
[Nonretroactive as of January 1, 2000]
(Added 1999)

21. The value of the load cell verification interval (v_{min}) must be stated in mass units. In addition to this information, a device may be marked with supplemental representations of v_{min}.
[*Nonretroactive as of January 1, 2001*]
(Added 1999)

22. *Combination vehicle/livestock scales must be marked with both the CLC for vehicle weighing and the section capacity for livestock weighing. All other requirements relative to these markings will apply.*
[Nonretroactive as of January 1, 2003]
(Added 2002)

Note: *The marked section capacity for livestock weighing may be less than the marked CLC for vehicle weighing.*
(Added 2003)

23. *Required only if a CC has been issued for the device or equipment.*
[Nonretroactive as of January 1, 2003]
(G-S.1. Identification (f) Added 2001)

24. *The section capacity shall be prefaced by the words "Section Capacity" or an abbreviation of that term. Abbreviations shall be "Sec Cap" or "Sec C". All capital letters and periods may be used.*
[Nonretroactive as of January 1, 2005]
(Added 2004)

N.1.2.1. Scales Marked I, II, III, or IIII. - Except for portable wheel load weighers, decreasing-load tests shall be conducted on scales marked I, II, III, or IIII and with n equal to or greater than 1000 with test loads equal to the maximum test load at each tolerance value. For example, on a Class III scale, at test loads equal to 4000d, 2000d, and 500d; for scales with n less than 1000, the test load shall be equal to one-half of the maximum load applied in the increasing-load test. (See Table 6.)
(Amended 1998)

N.1.2.2. All Other Scales. - On all other scales, except for portable wheel load weighers, the decreasing-load test shall be conducted with a test load equal to one-half of the maximum load applied in the increasing-load test.
(Amended 1998)

N.1.3. Shift Test.

N.1.3.1. Dairy-Product-Test Scales. - A shift test shall be conducted with a test load of 18 g successively positioned at all points on which a weight might reasonably be placed in the course of normal use of the scale.

N.1.3.2. Equal-Arm Scales. - A shift test shall be conducted with a half-capacity test load centered successively at four points positioned equidistance between the center and the front, left, back, and right edges of each pan as shown in the diagrams below. An equal test load shall be centered on the other pan.

N.1.3.3. Vehicle Scales, Axle-Load Scales, and Livestock Scales.

N.1.3.3.1. Vehicle Scales, Axle-Load Scales, and Combination Vehicle/Livestock Scales.

(a) **Minimum Shift Test.** At least one shift test shall be conducted with a minimum test load of 12.5% of scale capacity, which may be performed anywhere on the load-receiving element using the prescribed test patterns and maximum test loads specified below. (Combination Vehicle/Livestock Scales shall also be tested consistent with N.1.3.3.2. Prescribed Test Pattern and Test Loads for Livestock Scales with More Than Two Sections and Combination Vehicle/Livestock Scales.)
(Amended 1991, 2000 and 2003)

(b) **Prescribed Test Pattern and Loading for Vehicle Scales, Axle-Load Scales, and Combination Vehicle/Livestock Scales.** The normal prescribed test pattern shall be an area of 1.2 m (4 ft) in length and 3.0 m (10 ft) in width or the width of the scale platform, whichever is less. Multiple test patterns may be utilized when loaded in accordance with Paragraph (c) (d), or (e) as applicable. An example of a possible test pattern is shown in the diagram below.
(Amended 1997, 2001 and 2003)

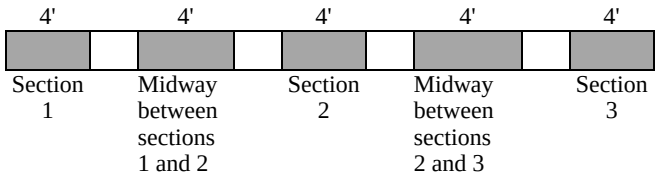

(c) **Loading Precautions for Vehicle Scales, Axle-Load Scales, and Combination Vehicle/Livestock Scales.** When loading the scale for testing, one side of the test pattern shall be loaded to no more than half of the concentrated load capacity or test load before loading the other side. The area covered by the test load may be less than 1.2 m (4 ft) x 3.0 m (10 ft) or the width of the scale platform; whichever is less; for test patterns less than 1.2 m (4 ft) in length the maximum loading shall meet the formula: [(wheel base of test cart or length of test load divided by 48 in) x 0.9 x CLC]. The maximum test load applied to each test pattern shall not exceed the concentrated load capacity of the scale. When the test pattern exceeds 1.2 m (4 ft), the maximum test load applied shall not exceed the concentrated load capacity times the largest "r" factor in Table UR.3.2.1. for the length of the area covered by the test load. For load-receiving elements installed prior to January 1, 1989, the rated section capacity may be substituted for concentrated load capacity to determine maximum loading. An example of a possible test pattern is shown above.
(Amended 1997 and 2003)

(d) **Multiple Pattern Loading.** To test to the nominal capacity, multiple patterns may be simultaneously loaded in a manner consistent with the method of use.

(e) **Other Designs.** Special design scales and those that are wider than 3.7 m (12 ft) shall be tested in a manner consistent with the method of use but following the principles described above.
(Amended 1988, 1991, 1997, 2000, 2001, and 2003)
(Amended 2003)

N.1.3.3.2. Prescribed Test Pattern and Test Loads for Livestock Scales with More Than Two Sections and Combination Vehicle/Livestock Scales. – A minimum test load of 5000 kg (10 000 lb) or one-half of the rated section capacity, whichever is less, shall be placed, as nearly as possible, successively over each main load support as shown in the diagram below. For livestock scales manufactured between January 1, 1989, and January 1, 2003, the required loading shall be no greater than one-half CLC. (Two-section livestock scales shall be tested consistent with N.1.3.7. All Other Scales Except Crane Scales, Hanging Scales, Hopper Scales, Wheel-Load Weighers, and Portable Axle-Load Weighers)

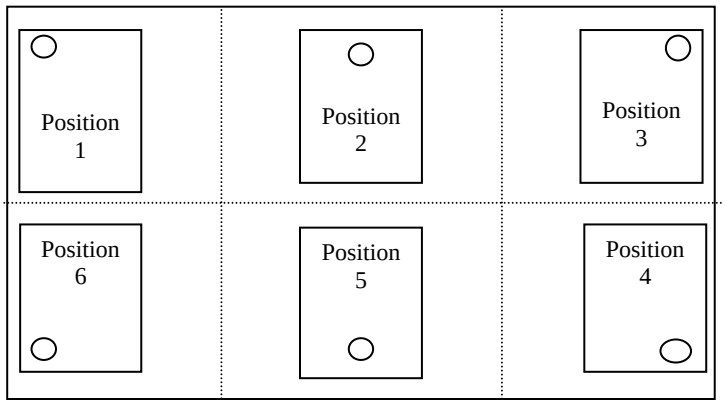

⬭ = Load Bearing Point

(Added 2003)

N1.3.3.3. Prescribed Test Patterns and Test Loads for Two-Section Livestock Scales. – A shift test shall be conducted using the following prescribed test loads and test patterns, provided the shift test load does not exceed one-half the rated section capacity or one-half the rated concentrated load capacity whichever is applicable, using either:

(a) A one-half nominal capacity test load centered as nearly as possible, successively at the center of each quarter of the load-receiving element as shown in N.1.3.7. All Other Scales Except Crane Scales, Hanging Scales, Hopper Scales, Wheel-Load Weighers, and Portable Axle-Load Weighers Figure 1; or

(b) A one-quarter nominal capacity test load centered as nearly as possible, successively over each main load support as shown in N.1.3.7. All Other Scales Except Crane Scales, Hanging Scales, Hopper Scales, Wheel-Load Weighers, and Portable Axle-Load Weighers Figure 2.

(Added 2007)

N.1.3.4. Railway Track Scales Weighing Individual Cars in Single Drafts. - A shift test shall be conducted with at least two different test loads, if available, distributed over, to the right and left of, each pair of main levers or other weighing elements supporting each section of the scale.

N.1.3.5. Monorail Scales, Static Test. - A shift test shall be conducted with a test load equal to the largest load that can be anticipated to be weighed in a given installation, but never less than one-half scale capacity. The load shall be placed successively on the right end, the left end, and the center of the live rail.
(Added 1985)

N.1.3.5.1. Dynamic Monorail Weighing Systems. - Dynamic tests with livestock carcasses or portions of carcasses shall be conducted during normal plant production. No less than 20 test loads using carcasses or portions of carcasses of the type normally weighed shall be used in the dynamic test. If the plant conveyor chain does not space or prevent the carcasses or portions of carcasses from touching one another, dynamic tests shall not be conducted until this condition has been corrected.

All carcasses or portions of carcasses shall be individually weighed statically on either the same scale being tested dynamically or another monorail scale with the same or smaller divisions and in close proximity. (The scale selected for static weighing of the carcasses or portions of carcasses shall first be tested statically with certified test weights that have been properly protected from the harsh environment of the packing plant to ensure they maintain accuracy.)

If the scale being tested is used for weighing freshly slaughtered animals (often referred to as a "hot scale"), care must be taken to get a static weighment as quickly as possible before or following the dynamic weighment to avoid loss due to shrink. If multiple dynamic tests are conducted using the same carcasses or portions of carcasses, static weights shall be obtained before and after multiple dynamic tests. If the carcass or portion of a carcass changes weight between static tests, the amount of weight change shall be taken into account, or the carcass or portion of a carcass shall be disregarded for tolerance purposes.

(**Note:** For a dynamic monorail test, the reference scale shall comply with the principles in the Fundamental Considerations paragraph 3.2. Tolerances for Standards.)
(Added 1996) (Amended 1999 and 2007)

N.1.3.6. Vehicle On-Board Weighing Systems. - The shift test for a vehicle on-board weighing system shall be conducted in a manner consistent with its normal use. For systems that weigh as part of the lifting cycle, the center of gravity of the load may be shifted in the vertical direction as well as from side to side. In other cases, the center of gravity may be moved to the extremes of the load-receiving element using loads of a magnitude that reflect normal use (i.e., the load for the shift test may exceed one-half scale capacity), and may, in some cases, be equal to the capacity of the scale. The shift test may be conducted when the weighing system is out-of-level to the extent that the weighing system remains operational.
(Added 1992)

N.1.3.7. All Other Scales Except Crane Scales, Hanging Scales, Hopper Scales, Wheel-Load Weighers, and Portable Axle-Load Weighers. - A shift test shall be conducted using the following prescribed test loads and test patterns. A single field standard weight used as the prescribed test load shall be applied centrally in the prescribed test pattern. When multiple field standard weights are used as the prescribed test load, the load shall be applied in a consistent pattern in the shift test positions throughout the test and applied in a manner that does not concentrate the load in a test pattern that is less than when that same load is a single field standard weight on the load-receiving element.

(a) For scales with a nominal capacity of 500 kg (1000 lb) or less, a shift test shall be conducted using a one-third nominal test load (defined as test weights in amounts of at least 30% of scale capacity, but not to exceed 35% of scale capacity) centered as nearly as possible at the center of each quadrant of the load-receiving element using the prescribed test pattern as shown in Figure 1.

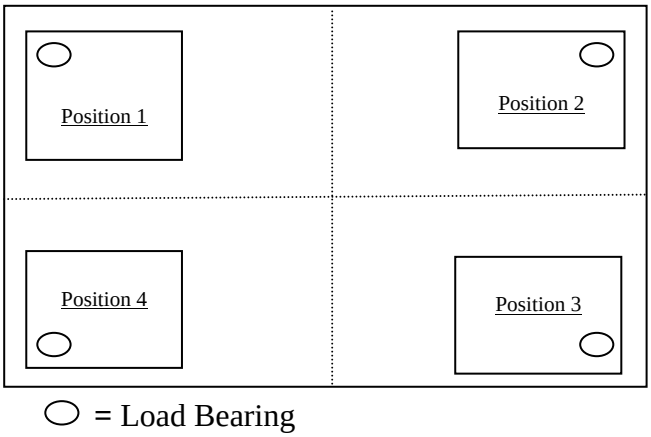

(Added 2003)
(Amended 1987, 2003, and 2007)

(b) For scales with a nominal capacity greater than 500 kg (1000 lb), a shift test may be conducted by either using a one-third nominal capacity test load (defined as test weights in amounts of at least 30% of scale capacity, but not to exceed 35% of scale capacity) centered as nearly as possible at the center of each quadrant of the load-receiving element using the prescribed test pattern as shown in Figure 1, or by using a one-quarter nominal capacity test load centered as nearly as possible, successively, over each corner of the load-receiving element using the prescribed test pattern as shown in Figure 2.

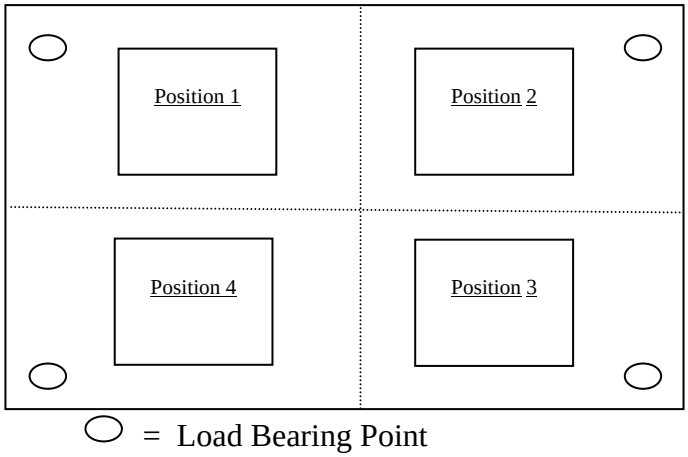

(Added 2003)
(Amended 1987, 2003, and 2007)

N.1.4. Sensitivity Test. - A sensitivity test shall be conducted on nonautomatic-indicating (weighbeam) scales only, with the weighing device in equilibrium at zero-load and at maximum test load. The test shall be conducted by increasing or decreasing the test load in an amount equal to the applicable value specified in T.2. or T.N.6.

N.1.5. Discrimination Test. *- A discrimination test shall be conducted on all automatic indicating scales with the weighing device in equilibrium at or near zero load and at or near maximum test load, and under controlled conditions in which environmental factors are reduced to the extent that they will not affect the results obtained. For scales equipped with an Automatic Zero-Tracking Mechanism (AZT), the discrimination test may be conducted at a range outside of the AZT range.*
[Nonretroactive as of January 1, 1986.]
(Added 1985) (Amended 2004)

N.1.5.1. Digital Device. - On a digital device, this test is conducted from just below the lower edge of the zone of uncertainty for increasing load tests, or from just above the upper edge of the zone of uncertainty for decreasing-load tests.

N.1.6. RFI Susceptibility Tests, Field Evaluation. - An RFI test shall be conducted at a given installation when the presence of RFI has been verified and characterized if those conditions are considered "usual and customary."
(Added 1986)

N.1.7. Ratio Test. - A ratio test shall be conducted on all scales employing counterpoise weights and on nonautomatic-indicating equal-arm scales.

N.1.8. Material Tests. - A material test shall be conducted on all customer-operated bulk weighing systems for recycled materials using bulk material for which the device is used. Insert into the device, in a normal manner, several accurately preweighed samples (free of foreign material) in varying amounts approximating average drafts.

N.1.9. Zero-Load Balance Change. - A zero-load balance change test shall be conducted on all scales after the removal of any test load. The zero-load balance should not change by more than the minimum tolerance applicable. (Also see G-UR.4.2.) (Renumbered 1988)

N.1.10. Counting Feature Test. – A test of the counting function shall be conducted on all Class I and Class II prescription scales having an active counting feature used in "legal for trade" applications. The test should verify that the scale will not accept a sample with less than either the minimum sample piece count or the minimum sample weight of 30 e. Counting feature accuracy should be verified at a minimum of two test loads. Verification of the count calculations shall be based upon the weight indication of the test load.

Note:

(1) The minimum sample weight is equal to the marked minimum invidiual piece weight times the marked minimum sample piece count.

(2) Test load as used in this section refers to actual calibration test weights selected from an appropriate test weight class.

(Added 2003)

N.1.11. Substitution Test. – In the substitution test procedure, material or objects are substituted for known test weights, or a combination of known test weights and previously quantified material or objects, using the scale under test as a comparator. Additional test weights or other known test loads may be added to the known test load to evaluate higher weight ranges on the scale.
(Added 2003)

N.1.12. Strain-Load Test. – In the strain load test procedure, an unknown quantity of material or objects are used to establish a reference load or tare to which test weights or substitution test loads are added.
(Added 2003)

N.2. Verification (Testing) Standards. - Field standard weights used in verifying weighing devices shall comply with requirements of NIST Handbook 105-1 (Class F) or the tolerances expressed in Fundamental Considerations, paragraph 3.2. (i.e., one-third of the smallest tolerance applied).
(Amended 1986)

N.3. Minimum Test Weights and Test Loads*.

[NOT ADOPTED]

4002.2 Scales (2.20)

(a) Recommended Minimum[2] Test Weights and Test Loads.[1] The recommended[2] minimum test weights and test loads for in-service tests (except railway track scales) are shown in Table 4. [See Table 4 for [1] and [2]]

N.3.1. Minimum Test-Weight Load and Recommended Strain-Load Test for Railway Track Scales.
(Amended 1990)

N.3.1.1. Approval. - The test-weight load shall be not less than 35 000 kg (80 000 lb). A strain-load test conducted up to the used capacity of the weighing system is recommended.
(Added 1990)

N.3.1.2. Interim Approval. - A test-weight load of not less than 13 500 kg (30 000 lb) and a strain-load test up to at least 25 percent of scale capacity may be used to return a scale into service following repairs.
(Added 1990)

Note: The length of time the scale may be used following an interim test is at the discretion of the official with statutory authority.
(Added 1990)

N.3.1.3. Enforcement Action for Inaccuracy. - To take enforcement action on a scale that is found to be inaccurate, a minimum test load of 13 500 kg (30 000 lb) must be used.
(Added 1990)

N.3.2. Field Standard Weight Carts. – Field Standard Weight Carts that comply with the tolerances expressed in Fundamental Considerations, paragraph 3.2. (i.e., one-third of the smallest tolerance applied) may be included as part of the minimum required test load (see Table 4) for shift tests and other test procedures.
(Added 2004)

N.4. Coupled-in-Motion Railroad Weighing Systems.[3]

N.4.1. Weighing Systems Used to Weigh Trains of Less Than 10 Cars. - These weighing systems shall be tested using a consecutive-car test train consisting of the number of cars weighed in the normal operation run over the weighing system a minimum of five times in each mode of operation following the final calibration.
(Added 1990; Amended 1992)

N.4.2. Weighing Systems Placed in Service Prior to January 1, 1991, and Used to Weigh Trains of 10 or More Cars. - The minimum test train shall be a consecutive-car test train of no less than 10 cars run over the scale a minimum of five times in each mode of operation following final calibration.
(Added 1990; Amended 1992)

N.4.3. Weighing Systems Placed in Service on or After January 1, 1991, and Used to Weigh Trains of 10 or More Cars.

(a) These weighing systems shall be tested using a consecutive-car test train of no less than 10 cars run over the scale a minimum of five times in each mode of operation following final calibration; or

(b) if the official with statutory authority determines it necessary, the As Used Test Procedures outlined in N.4.3.1. shall be used.

(Added 1990; Amended 1992)

N.4.3.1. As Used Test Procedures - A weighing system shall be tested in a manner that represents the normal method of operation and length(s) of trains normally weighed. The weighing systems may be tested using either:

(1) a consecutive-car test train of a length typical of train(s) normally weighed; or

(2) a distributed-car test train of a length typical of train(s) normally weighed.

---

[3] A test weight car that is representative of one of the types of cars typically weighed on the scale under test may be used wherever reference weight cars are specified.
(Added 1991)

TABLE 4. RECOMMENDED[2] MINIMUM TEST WEIGHTS AND TEST LOADS[1]			
Device Capacity (Pounds)	**Recommended[2] minimums (in terms of device capacity)**		**Recommended[2] (where practicable)**
	Test Weights (greater of)	**Test Loads**	
0 to 100	**105%**		
101 to 1,000	**50% or 100 lb**	**105%**	
1,001 to 40,000	**25% or 500 lb**	**50%**	**Test weights to dial face capacity, 1,000d or test load to used capacity, if greater than minimums specified**
40,000 +	**12.5% or 10,000 lb**	**25%**	

[1] The term "test load" means the sum of the combination of field standard test weights and any other applied load used in the conduct of a test using substitution or build-up test methods.

Except for railway track scales, the recommended[2] minimum test of a Class III L scale shall consist of one test from zero to at least 25% of the scale capacity and then one strain load test to at least the used capacity of the device.

Each test is to be conducted using a known test load of at least 25% of scale capacity. This test load may be comprised entirely of test weights or a combination of test weights equal to at least 12.5% of scale capacity and a substitution load.

[2] The word "Recommended" will be deleted from this section as of January 1, 1998. This will make the amounts of test weights and test loads specified in Table 4 mandatory as of January 1, 1998.

However, a consecutive-car test train of a shorter length may be used provided that initial verification test results for the shorter consecutive-car test train agree with the test results for the distributed-car or full-length consecutive-car test train as specified in N.4.3.1.1.

The official with statutory authority shall be responsible for determining the minimum test train length to be used on subsequent tests.
(Added 1990; Amended 1992)

N.4.3.1.1. Initial Verification. - Initial verification tests should be performed on any new weighing system and whenever either the track structure or the operating procedure changes. If a consecutive-car test train of length shorter than trains normally weighed is to be used for subsequent verification, the shorter consecutive-car test train results shall be compared either to a distributed-car or to a consecutive-car test train of length(s) typical of train(s) normally weighed.

The difference between the total train weight of the train(s) representing the normal method of operation and the weight of the shorter consecutive-car test train shall not exceed 0.15%. If the difference in test results exceeds 0.15%, the length of the shorter consecutive-car test train shall be increased until agreement within 0.15% is achieved. Any adjustments to the weighing system based upon the use of a shorter consecutive-car test train shall be offset to correct the bias that was observed between the full-length train test and the shorter consecutive-car test train.
(Added 1990; Amended 1992, 1993)

N.4.3.1.2. Subsequent Verification. - The test train may consist of either a consecutive-car test train with a length not less than that used in initial verification, or a distributed-car test train representing the number of cars used in the normal operation.
(Added 1990)

N.4.3.1.3. Distributed-Car Test Trains.

(a) The length of the train shall be typical of trains that are normally weighed.

(b) The reference weight cars shall be split into three groups, each group consisting of 10 cars or 10 percent of the train length, whichever is less.
(Amended 1991)

(c) The test groups shall be placed near the front, around the middle, and near the end of the train.

(d) Following the final adjustment, the distributed-car test train shall be run over the scale at least three times or shall produce 50 weight values, whichever is greater.

(e) The weighing system shall be tested in each mode of operation.
(Added 1990; Amended 1992)

N.4.3.1.4. Consecutive-Car Test Trains.

(a) A consecutive-car test train shall consist of at least 10 cars.

(b) If the consecutive-car test train consists of between 10 and 20 cars, inclusive, it shall be run over the scale a minimum of five times in each mode of operation following the final calibration.

(c) If the consecutive-car test train consists of more than 20 cars, it shall be run over the scale a minimum of three times in each mode of operation.
(Added 1990; Amended 1992)

N.5. Uncoupled-in-Motion Railroad Weighing System. - An uncoupled-in-motion scale shall be tested statically before being tested in motion by passing railroad reference weight cars over the scale. When an uncoupled-in-motion railroad weighing system is tested, the car speed and the direction of travel shall be the same as when the scale is in normal use. The minimum in-motion test shall be three reference weight cars passed over the scale three times. The cars shall be selected to cover the range of weights that are normally weighed on the system and to reflect the types of cars normally weighed.
(Added 1993)

N.6. Nominal Capacity of Prescription Scales. - The nominal capacity of a prescription scale shall be assumed to be 1/2 apothecary ounce, unless otherwise marked. (Applicable only to scales not marked with an accuracy class.)

T. Tolerances Applicable to Devices <u>not</u> Marked I, II, III, III L, or IIII

T.1. Tolerance Values.

T.1.1. General. - The tolerances applicable to devices not marked with an accuracy class shall have the tolerances applied as specified in Table T.1.1.
(Amended 1990)

T.1.2. Postal and Parcel Post Scales. - The tolerances for postal and parcel post scales are given in Table T.1.1. and Table 5.
(Amended 1990)

T.2. Sensitivity Requirement (SR)

T.2.1. Application. - The sensitivity requirement (SR) is applicable to all nonautomatic-indicating scales not marked I, II, III, III L, or IIII, and is the same whether acceptance or maintenance tolerances apply.

T.2.2. General. - Except for scales specified in paragraphs T.2.3. through T.2.8.: 2d, 0.2 percent of the scale capacity, or 40 lb, whichever is least.

T.2.3. Prescription Scales. - 6 mg (0.1 grain).

Table 5.
Maintenance and Acceptance Tolerances for Unmarked
Postal and Parcel Post Scales

Scale Capacity (lb)	Test loads (lb)	Maintenance tolerance (±) (oz)	Maintenance tolerance (±) (lb)	Acceptance tolerance (±) (oz)	Acceptance tolerance (±) (lb)
0 to 4, inclusive*	0 to 1, inclusive	1/32	0.002	1/32	0.002
	over 1	1/8	0.008	1/16	0.004
over 4*	0 to 7, inclusive	3/16	0.012	3/16	0.012
	7+ to 24, inclusive	3/8	0.024	3/16	0.012
	24+ to 30, inclusive	1/2	0.030	1/4	0.015
	over 30	0.1% of Test Load		0.05% of Test Load	

*See Table T.1.1. for scales designed and/or used to weigh loads less than 2 lb.

Table T.1.1. Tolerances for Unmarked Scales						
Type of Device	Subcategory	Min. Tol.	Accept. Tol.	Maint. Tol.	Decreasing Load Multiplier[1]	Other Applicable Requirements
Vehicle, axle-load, livestock, railway track (weighing statically), Crane, and hopper (other than grain hopper)		Class III L, T.N.3.1 (Table 6) and T.N.3.2.			1.0	T.N.2., T.N.3., T.N.4.1., T.N.4.2., T.N.4.3., T.N.4.4., T.N.5., T.N.7.2., *T.N.8.1.4.*[4], T.N.9.
Grain test scales	n ≤ 10 000 n > 10 000	Class III, T.N.3.1. (Table 6) and T.N.3.2. Class II, T.N.3.1. (Table 6) and T.N.3.2.			1.0	*T.N.8.1.4.*[4], T.N.9.
Railway track scales Weighing in motion		T.N.3.6. except that for T.N.3.6.2. (a), no single error shall exceed four times the maintenance tolerance.			1.0	*T.N.8.1.4.*[4], T.N.9.
Monorail Scales, In-Motion		T.N.3.8.			1.0	*T.N.8.1.4.*[4], T.N.9.
Customer-Operated Bulk-Weighing Systems for Recycled Materials		± 5% of applied material test load. Average error on 10 or more test loads ≤ 2.5%.			1.0	*T.N.8.1.4.*[4], T.N.9.
Wheel-load weighers and Portable axle-load Scales	Tested individually or in pairs[2]	0.5d or 50 lb, whichever is greater	1% of test load	2% of test load	1.5[3]	*T.N.8.1.4.*[4], T.N.9.
Prescription scales		0.1 grain (6 mg)	0.1 % of test load load	0.1% of test load	1.5	*T.N.8.1.4.*[4], T.N.9.
Jewelers' scales	Graduated	0.5d	0.05% of test load	0.05% of test load	1.5	*T.N.8.1.4.*[4], T.N.9.
	Ungraduated	Sensitivity or smallest weight, whichever is less				
Dairy-product-test scale	Loads < 18 g 18 g load	0.2 grain 0.2 grain	0.2 grain 0.3 grain	0.2 grain 0.5 grain	1.5	*T.N.8.1.4.*[4], T.N.9.
Postal and parcel post scales Designed/used to weigh loads < 2 lb	Loads < 2 lb	15 grain, 1 g, 1/32 oz, 0.03 oz, or 0.002 lb	15 grain, 1 g, 1/32 oz, 0.03 oz, or 0.002 lb	15 grain, 1 g, 1/32 oz, 0.03 oz, or 0.002 lb	1.5	*T.N.8.1.4.*[4], T.N.9.
	Loads ≥ 2 lb	Table 5	Table 5	Table 5		
Other postal and parcel post scales		Table 5	Table 5	Table 5	1.5	*T.N.8.1.4.*[4], T.N.9.
All other scales	n > 5 000	0.5d or 0.05% of scale capacity, whichever is less	0.05% of test load	0.1% of test load	1.5	T.N.2.5., T.N.4.1., T.N.4.2., T.N.4.3., T.N.5., T.N.7.2., *T.N.8.1.4.*[4], T.N.9.
	n ≤ 5 000	Class III, T.N.3.1., Table 6 and T.N.3.2.			1.0	T.N.2., T.N.3., T.N.4.1., T.N.4.2., T.N.4.3., T.N.5., T.N.7.2., *T.N.8.1.4.*[4], T.N.9.

[1] The decreasing load test applies only to automatic indicating scales.
[2] If marked and tested as a pair, the tolerance shall be applied to the sum of the indications.
[3] The decreasing load test does not apply to portable wheel load weighers.
(Added 1990; Amended 1992 and 1998)
[4] *T.N.8.1.4. Operating Temperature is nonretroactive and effective for unmarked devices manufactured after January 1, 1981.*

T.2.4. Jewelers' Scales.

T.2.4.1. With One-Half Ounce Capacity or Less. – 6 mg (0.1 grain).

T.2.4.2. With More Than One-Half Ounce Capacity. - 1d or 0.05 percent of the scale capacity, whichever is less.

T.2.5. Dairy-Product-Test Scales

T.2.5.1. Used in Determining Butterfat Content. – 32 mg (0.5 grain).

T.2.5.2. Used in Determining Moisture Content. – 19 mg (0.3 grain).

T.2.6. Grain Test Scales. - The sensitivity shall be as stated in T.N.6.
(Amended 1987)

T.2.7. Vehicle, Axle-Load, Livestock, and Animal Scales.

T.2.7.1. Equipped With Balance Indicators. - 1d.

T.2.7.2. Not Equipped With Balance Indicators. - 2d or 0.2 percent of the scale capacity, whichever is less.

4002.2. Scales (2.20)

(d) Livestock Scales Not Equipped With Balance Indicator. The Sensitivity Requirement for livestock scales not equipped with a balance indicator shall be 10 pounds, notwithstanding the requirements of Handbook 44, Section 2.20. Scales, T.2.7.2.

T.2.8. Railway Track Scales. - 3d or 100 lb, whichever is less.

T.3. Sensitivity Requirement, Equilibrium Change Required. The minimum change in equilibrium with test loads equal to the values specified in T.2. shall be as follows:

(a) Scale With a Trig Loop but Without a Balance Indicator. The position of rest of the weighbeam shall change from the center of the trig loop to the top or bottom, as the case may be.

(b) Scale With a Single Balance Indicator and Having a Nominal Capacity of Less Than 250 g (500 b). The position of rest of the indicator shall change 1.0 mm (0.04 in) or one division on the graduated scale, whichever is greater.

(c) Scale With a Single Balance Indicator and Having a Nominal Capacity of 250 kg (500 lb) or Greater. The position of rest of the indicator shall change 6.4 mm (0.25 in) or one division on the graduated scale or the width of the central target area, whichever is greater. However, the indicator on a batching scale shall change 3.2 mm (0.125 in) or one division on the graduated scale, whichever is greater.

(d) Scale With Two Opposite-Moving Balance Indicators. The position of rest of the two indicators moving in opposite directions shall change 1.0 mm (0.04 in) with respect to each other

(e) Scale With Neither a Trig Loop Nor a Balance Indicator. The position of rest of the weighbeam or lever system shall change from the horizontal, or midway between limiting stops, to either limit of motion.

T.N. Tolerances Applicable to Devices Marked I, II, III, III L, & IIII.

T.N.1. Principles.

T.N.1.1. Design. - The tolerance for a weighing device is a performance requirement independent of the design principle used.

T.N.1.2. Accuracy Classes. - Weighing devices are divided into accuracy classes according to the number of scale divisions (n) and the value of the scale division (d).

T.N.1.3. Scale Division. - The tolerance for a weighing device is related to the value of the scale division (d) or the value of the verification scale division (e) and is generally expressed in terms of d or e.

T.N.2. Tolerance Application.

T.N.2.1. General. - The tolerance values are positive (+) and negative (-) with the weighing device adjusted to zero at no load. When tare is in use, the tolerance values are applied from the tare zero reference; the tolerance values apply to certified test loads only.

T.N.2.2. Type Evaluation Examinations. - For type evaluation examinations, the tolerance values apply to increasing and decreasing load tests within the temperature, power supply, and barometric pressure limits specified in T.N.8.

T.N.2.3. Subsequent Verification Examinations. - For subsequent verification examinations, the tolerance values apply regardless of the influence factors in effect at the time of the conduct of the examination. (Also see G-N.2.)

T.N.2.4. Multi-Interval and Multiple Range (Variable Division-Value) Scales. - For multi-interval and multiple range scales, the tolerance values are based on the value of the scale division of the range in use.
(Amended 2000)

T.N.2.5. Ratio Tests. - For ratio tests, the tolerance values are 0.75 of the applicable tolerances.

T.N.3. Tolerance Values.

T.N.3.1. Maintenance Tolerance Values. - The maintenance tolerance values are as specified in Table 6.

T.N.3.2. Acceptance Tolerance Values. - The acceptance tolerance values shall be one-half the maintenance tolerance values.

T.N.3.3. Wheel-Load Weighers and Portable Axle-Load Weighers of Class IIII. - The tolerance values are two times the values specified in T.N.3.1. and T.N.3.2.
(Amended 1986)

T.N.3.4. Crane and Hopper (Other than Grain Hopper) Scales. - The maintenance and acceptance tolerances shall be as specified in T.N.3.1. and T.N.3.2. for Class III L, except that the tolerance for crane and construction materials hopper scales shall not be less than 1d or 0.1 percent of the scale capacity, whichever is less.
(Amended 1986)

T.N.3.5. Separate Main Elements: Load Transmitting Element, Indicating Element, Etc. - If a main element separate from a weighing device is submitted for type evaluation, the tolerance for the element is 0.7 that for the complete weighing device. This fraction includes the tolerance attributable to the testing devices used.

T.N.3.6. Coupled-In-Motion Railroad Weighing Systems. - The maintenance and acceptance tolerance values for the group of weight values appropriate to the application must satisfy the following conditions:
(Amended 1990 and 1992)

T.N.3.6.1. - For any group of weight values, the difference in the sum of the individual in-motion car weights of the group as compared to the sum of the individual static weights shall not exceed 0.2 percent.
(Amended 1990)

Table 6.
Maintenance Tolerances
(All values in this table are in scale divisions)

Tolerance in Scale Divisions				
	1	2	3	5
Class	Test Load			
I	0 – 50 000	50 001 - 200 000	200 001 +	
II	0 – 5 000	5 001 - 20 000	20 001 +	
III	0 – 500	501 - 2 000	2 001 - 4 000	4 001 +
IIII	0 – 50	51 - 200	201 - 400	401 +
III L	0 – 500	501 - 1 000	(Add 1d for each additional 500d or fraction thereof)	

T.N.3.6.2. - If a weighing system is used to weigh trains of five or more cars, and if the individual car weights are used, any single weight value within the group must meet the following criteria:

(a) no single error may exceed three times the static maintenance tolerance;

(b) not more than 5 percent of the errors may exceed two times the static maintenance tolerance; and

(c) not more than 35 percent of the errors may exceed the static maintenance tolerance.

(Amended 1990 and 1992)

T.N.3.6.3. - For any group of weight values wherein the sole purpose is to determine the sum of the group, T.N.3.6.1. alone applies.
(Amended 1990)

T.N.3.6.4. - For a weighing system used to weigh trains of less than five cars, no single car weight within the group may exceed the static maintenance tolerance.
(Amended 1990 and 1992)

T.N.3.7. Uncoupled-in-Motion Railroad Weighing Systems. - The maintenance and acceptance tolerance values for any single weighment within a group of noninteractive (i.e., uncoupled) loads, the weighment error shall not exceed the static maintenance tolerance.
(Amended 1992)

T.N.3.8. Dynamic Monorail Weighing System. - Acceptance tolerance shall be the same as the maintenance tolerance shown in Table 6. On a dynamic test of 20 or more individual test loads, 10 percent of the individual test loads may be in error, each not to exceed two times the tolerance. The error on the total of the individual test loads shall not exceed ± 0.2 percent. (See also Note in N.1.3.6.1.) *For equipment undergoing type evaluation, a tolerance equal to one-half the maintenance tolerance values shown in Table 6 shall apply.*
[Nonretroactive January 1, 2002]
(Added 1986) (Amended 1999 and 2001)

T.N.3.9. Materials Test on Customer-Operated Bulk Weighing Systems for Recycled Materials. - The maintenance and acceptance tolerance shall be ± 5 percent of the applied materials test load except that the average error on 10 or more test materials test loads shall not exceed ± 2.5 percent.
(Added 1986)

T.N.3.10. Prescription Scales with a Counting Feature. In addition to Table 6 Maintenance Tolerances (for weight), the indicated piece count value computed by a Class I or Class II prescription scale counting feature shall comply with the tolerances in Table T.N.3.10.

Table T.N.3.10.
Maintenance and Acceptance Tolerances in Excess and in Deficiency for Count

Indication of Count	Tolerance (piece count)
0 to 100	0
101 to 200	1
201 or more	0.5%

(Added 2003)

T.N.3.11. Tolerances for Substitution Test. – Tolerances are applied to the scale based on the substitution test load.
(Added 2003)

T.N.3.12. Tolerances for Strain-Load Test. – Tolerances apply only to the test weights or substitution test loads.
(Added 2003)

T.N.4. Agreement of Indications.

T.N.4.1. Multiple Indicating/Recording Elements. - In the case of a scale or weighing system equipped with more than one indicating element or indicating element and recording element combination, where the indicators or indicator/recorder combination are intended to be used independently of one another, tolerances shall be applied independently to each indicator or indicator/recorder combination.
(Amended 1986)

T.N.4.2. Single Indicating/Recording Element. - In the case of a scale or weighing system with a single indicating element or an indicating/recording element combination and equipped with component parts such as unit weights, weighbeam and weights, or multiple weighbeams that can be used in combination to indicate a weight, the difference in the weight value indications of any load shall not be greater than the absolute value of the applicable tolerance for that load, and shall be within tolerance limits.
(Amended 1986)

T.N.4.3. Single Indicating Element/Multiple Indications. - In the case of an analog indicating element equipped with two or more indicating means within the same element, the difference in the weight indications for any load other than zero shall not be greater than one-half the value of the scale division (d) and be within tolerance limits.
(Amended 1986)

T.N.4.4. Shift or Section Tests. - The range of the results obtained during the conduct of a shift test or a section test shall not exceed the absolute value of the maintenance tolerance applicable and each test result shall be within applicable tolerances.
(Added 1986)

T.N.4.5. Time Dependence. – A time dependence test shall be conducted during type evaluation and may be conducted during field verification provided test conditions remain constant.
(Amended 1989 and 2005)

T.N.4.5.1. Time Dependence; Class II, III, and IIII Non-Automatic Weighing Instruments. - A non-automatic weighing instrument of Classes II, III, and IIII shall meet the following requirements at constant test conditions. During type evaluation, this test shall be conducted at 20 °C ± 2 °C (68 °F ± 4 °F):

(a) When any load is kept on an instrument, the difference between the indication obtained immediately after placing the load and the indication observed during the following 30 minutes shall not exceed 0.5 e. However, the difference between the indication obtained at 15 minutes and the indication obtained at 30 minutes shall not exceed 0.2 e.

(b) If the conditions in (a) are not met, the difference between the indication obtained immediately after placing the load on the instrument and the indication observed during the following 4 hours shall not exceed the absolute value of the maximum permissible error at the load applied.

(c) The deviation on returning to zero as soon as the indication has stabilized, after the removal of any load which has remained on the instrument for 30 minutes, shall not exceed 0.5 e.

For a multi-interval instrument, the deviation shall not exceed 0.5 e_1 (where e_1 is the interval of the first partial weighing range or segment of the scale).

On a multiple range instrument, the deviation on returning to zero from Max_i (load in the applicable weighing range) shall not exceed 0.5 e_i (interval of the weighing segment). Furthermore, after returning to zero from any load greater than Max_1 (capacity of the first weighing range) and immediately after switching to the lowest weighing range, the indication near zero shall not vary by more than e_1 (interval of the first weighing range) during the following 5 minutes.
(Added 2005) (Amended 2006)

T.N.4.5.2. Time Dependence; Class III L Non-Automatic Weighing Instruments. - A non-automatic weighing instrument of Class III L shall meet the following requirements:

(a) When any load is kept on an instrument, the difference between the indication obtained immediately after placing the load and the indication observed during the following 30 minutes shall not exceed 1.5 e. However, the difference between the indication obtained at 15 minutes and the indication obtained at 30 minutes shall not exceed 0.6 e.

(b) If the conditions in (a) are not met, the difference between the indication obtained immediately after placing the load on the instrument and the indication observed during the following 4 hours shall not exceed the absolute value of the maximum permissible error at the load applied.

(c) The deviation on returning to zero as soon as the indication has stabilized, after the removal of any load which has remained on the instrument for 30 minutes, shall not exceed one-half of the absolute value of the applicable tolerance for the applied load for Class III L devices.

(Added 2005) (Amended 2006)

T.N.4.6. Time Dependence (Creep) for Load Cells During Type Evaluation. – A load cell (force transducer) marked with an accuracy class shall meet the following requirements at constant test conditions:

(a) **Permissible Variations of Readings**. - With a constant maximum load for the measuring range (D_{max}) between 90% and 100% of maximum capacity (E_{max}), applied to the load cell, the difference between the initial reading and any reading obtained during the next 30 minutes shall not exceed the absolute value of the maximum permissible error (mpe) for the applied load (see Table T.N.4.6.). The difference between the reading obtained at 20 minutes and the reading obtained at 30 minutes shall not exceed 0.15 times the absolute value of the mpe (see Table T.N.4.6.).

(b) **Apportionment Factors**. - The mpe for creep shall be determined from Table T.N.4.6. Maximum Permissible Error (mpe)* for Load Cells During Type Evaluation using the following apportionment factors (p_{LC}):

p_{LC} = 0.7 for load cells marked with S (single load cell applications),
p_{LC} = 1.0 for load cells marked with M (multiple load cell applications), and
p_{LC} = 0.5 for Class III L load cells marked with S or M.

(Added 2005) (Amended 2006)

Table T.N.4.6. Maximum Permissible Error (mpe)* for Load Cells During Type Evaluation			
mpe in Load Cell Verifications Divisions (v) = p_{LC} x Basic Tolerance in v			
Class	p_{LC} x 0.5 v	p_{LC} x 1.0 v	p_{LC} x 1.5 v
I	0 – 50 000 v	50 001 v – 200 000 v	200 001 v +
II	0 – 5 000 v	5 001 v – 20 000 v	20 001 v +
III	0 – 500 v	501 v – 2 000 v	2 001 v +
IIII	0 – 50 v	51 v – 200 v	201 v +
III L	0 – 500 v	501 v – 1 000 v	(Add 0.5 v to the basic tolerance for each additional 500 v or fraction thereof up to a maximum load of 10 000 v)
v represents the load cell verification interval p_{LC} represents the apportionment factors applied to the basic tolerance p_{LC} = 0.7 for load cells marked with S (single load cell applications) p_{LC} = 1.0 for load cells marked with M (multiple load cell applications) p_{LC} = 0.5 for Class III L load cells marked with S or M * mpe = p_{LC} x Basic Tolerance in load cell verifications divisions (v)			

(Table Added 2005) (Amended 2006)

T.N.4.7. Creep Recovery for Load Cells During Type Evaluation. - The difference between the initial reading of the minimum load of the measuring range (D_{min}) and the reading after returning to minimum load subsequent to the maximum load (D_{max}) having been applied for 30 minutes shall not exceed:

(a) 0.5 times the value of the load cell verification interval (0.5 v) for Class I, II, III, and IIII load cells, or

(b) 1.5 times the value of the load cell verification interval (1.5 v) for Class III L load cells.

(Added 2006)

T.N.5. Repeatability. - The results obtained from several weighings of the same load under reasonably static test conditions shall agree within the absolute value of the maintenance tolerance for that load, and shall be within applicable tolerances.

T.N.6. Sensitivity. - This section is applicable to all non-automatic-indicating scales marked I, II, III, III L, or IIII.

T.N.6.1. Test Load.

(a) The test load for sensitivity for nonautomatic-indicating vehicle, axle-load, livestock, and animal scales shall be 1d for scales equipped with balance indicators, and 2d or 0.2 percent of the scale capacity, whichever is less, for scales not equipped with balance indicators.

(b) For all other nonautomatic-indicating scales, the test load for sensitivity shall be 1d at zero and 2d at maximum test load.

T.N.6.2. Minimum Change of Indications. - The addition or removal of the test load for sensitivity shall cause a minimum permanent change as follows:

(a) for a scale with trig loop but without a balance indicator, the position of the weighbeam shall change from the center to the outer limit of the trig loop;

(b) for a scale with balance indicator, the position of the indicator shall change one division on the graduated scale, the width of the central target area, or the applicable value as shown below, whichever is greater;

Scale of Class I or II: 1 mm (0.04 in),

Scale of Class III or IIII with a maximum capacity of 30 kg (70 lb) or less: 2 mm (0.08 in),

Scale of Class III, III L, or IIII with a maximum capacity of more than 30 kg (70 lb): 5 mm (0.20 in);

(c) for a scale without a trig loop or balance indicator, the position of rest of the weighbeam or lever system shall change from the horizontal or midway between limiting stops to either limit of motion.

(Amended 1987)

T.N.7. Discrimination.

T.N.7.1. Analog Automatic Indicating (i.e., Weighing Device With Dial, Drum, Fan, Etc.). - A test load equivalent to 1.4d shall cause a change in the indication of at least 1.0d. (See N.1.5.)

T.N.7.2. Digital Automatic Indicating. - A test load equivalent to 1.4d shall cause a change in the indicated or recorded value of at least 2.0d. This requires the zone of uncertainty to be not greater than three-tenths of the value of the scale division. (See N.1.5.1.)

T.N.8. Influence Factors. - The following factors are applicable to tests conducted under controlled conditions only, provided that:

(a) types of devices approved prior to January 1, 1986, and manufactured prior to January 1, 1988, need not meet the requirements of this section, and

(b) new types of devices submitted for approval after January 1, 1986, shall comply with the requirements of this section, and

(c) all devices manufactured after January 1, 1988, shall comply with the requirements of this section.
(Amended 1985)

T.N.8.1. Temperature. - Devices shall satisfy the tolerance requirements under the following temperature conditions:

T.N.8.1.1. If not specified in the operating instructions for Class I or II scales, or if not marked on the device for Class III, III L, or IIII scales, the temperature limits shall be:

-10 °C to 40 °C (14 °F to 104 °F)

T.N.8.1.2. If temperature limits are specified for the device, the range shall be at least that specified in Table T.N.8.1.2.

Table T.N.8.1.2.
Temperature Range by Class

Class	Temperature Range
I	5 °C (9 °F)
II	15 °C (27 °F)
III, III L, & IIII	30 °C (54 °F)

T.N.8.1.3. Temperature Effect on Zero-Load Balance. - The zero-load indication shall not vary by more than:

(a) three divisions per 5 °C (9 °F) change in temperature for Class III L devices; or

(b) one division per 5 °C (9 °F) change in temperature for all other devices.
(Amended 1990)

T.N.8.1.4. Operating Temperature. - Except for Class I and II devices, an indicating or recording element shall not display nor record any usable values until the operating temperature necessary for accurate weighing and a stable zero balance condition have been attained.

T.N.8.2. Barometric Pressure. - Except for Class I scales, the zero indication shall not vary by more than one scale division for a change in barometric pressure of 1 kPa over the total barometric pressure range of 95 kPa to 105 kPa (28 to 31 in of Hg).

T.N.8.3. Electric Power Supply.

T.N.8.3.1. Power Supply, Voltage and Frequency.

(a) Weighing devices that operate using alternating current must perform within the conditions defined in paragraphs T.N.3. through T.N.7., inclusive, when tested over the range of -15% to +10% of the marked nominal line voltage(s) at 60 Hz, or the voltage range marked by the manufacturer, at 60 Hz.
(Amended 2003 and 2004)

(b) Battery operated instruments shall not indicate nor record values outside the applicable tolerance limits when battery power output is excessive or deficient.

T.N.8.3.2. Power Interruption. - A power interruption shall not cause an indicating or recording element to display or record any values outside the applicable tolerance limits.

T.N.9. Radio Frequency Interference (RFI) and Other Electromagnetic Interference Susceptibility. - The difference between the weight indication due to the disturbance and the weight indication without the disturbance shall not exceed one scale division (d); or the equipment shall:

(a) blank the indication, or

(b) provide an error message, or

(c) the indication shall be so completely unstable that it cannot be interpreted, or transmitted into memory or to a recording element, as a correct measurement value.
(Added 1986)

The tolerance in T.N.9. is to be applied independently of other tolerances. For example, if indications are at allowable basic tolerance error limits when the disturbance occurs, then it is acceptable for the indication to exceed the applicable basic tolerances during the disturbance. [Editors' Note: Following the 1997 NCWM Annual Meeting, the text in this paragraph was revised with concurrence of the S&T Committee to clarify its application.]
(Amended 1997)

UR. User Requirements

UR.1. Selection Requirements. - Equipment shall be suitable for the service in which it is used with respect to elements of its design, including but not limited to, its capacity, number of scale divisions, value of the scale division or verification scale division, minimum capacity, and computing capability.[4]

[4] Purchasers and users of scales such as railway track, hopper, and vehicle scales should be aware of possible additional requirements for the design and installation of such devices. (Footnote Added 1995)

UR.1.1. General.

(a) For devices marked with a class designation, the typical class or type of device for particular weighing applications is shown in Table 7a.

(b) For devices not marked with a class designation, Table 7b applies.

Table 7a.
Typical Class or Type of Device for Weighing Applications

Class	Weighing Application or Scale Type
I	Precision laboratory weighing
II	Laboratory weighing, precious metals and gem weighing, grain test scales
III	All commercial weighing not otherwise specified, grain test scales, retail precious metals and semi-precious gem weighing, animal scales, postal scales, vehicle on-board weighing systems with a capacity less than or equal to 30 000 lb, and scales used to determine laundry charges
III L	Vehicle scales, vehicle on-board weighing systems with a capacity greater than 30 000 lb, axle-load scales, livestock scales, railway track scales, crane scales, and hopper (other than grain hopper) scales
IIII	Wheel-load weighers and portable axle-load weighers used for highway weight enforcement

Note: A scale with a higher accuracy class than that specified as "typical" may be used.
(Amended 1985, 1986, 1987, 1988, 1992, 1995, 2004 and 2005)

Table 7b.
Applicable to Devices Not Marked With a Class Designation

Scale Type or Design	Maximum Value of d
Retail Food Scales, 50-lb capacity and less	1 ounce
Animal Scales	1 pound
Grain Hopper Scales Capacity up to and incl. 50 000 lb Capacity over 50 000 lb	 10 pounds (but not greater than 0.05 % of capacity) 20 pounds
Crane Scales	not greater than 0.2 % of capacity
Vehicle and Axle-Load Scales Used in Combination Capacity up to and including 200 000 lb Capacity over 200 000 lb	 20 pounds 50 pounds
Railway Track Scales With weighbeam Automatic indicating	 20 pounds 100 pounds
Scales with capacities greater than 500 lb except otherwise specified	0.1 % capacity (but not greater than 50 lb)
Wheel-Load Weighers	.25 % capacity (but not greater than 50 lb)

Note: For scales not specified in this table, G-UR.1.1. and UR.1. apply.
(Added 1985) (Amended 1989)

UR.1.2. Grain Hopper Scales. - The minimum number of scale divisions for a Class III Hopper Scale used for weighing grain shall be 2 000.

UR.1.3. Value of the Indicated and Recorded Scale Division. - *The value of the scale division as recorded shall be the same as the division value indicated.*
[Nonretroactive as of January 1, 1986]
(Added 1985) (Amended 1999)

UR.1.3.1. Exceptions. – The provisions of UR.1.3. Value of the Indicated and Recorded Scale Division shall not apply to:

(a) Class I scales, or

(b) Dynamic monorail weighing systems when the value of d is less than the value of e.

(Added 1999)

UR.1.4. Grain-Test Scales: Value of the Scale Divisions. - The scale division for grain-test scales shall not exceed 0.2 g for loads through 500 g, and shall not exceed 1 g for loads above 500 g through 1 000 g.
(Added 1992)

UR.1.5. Recording Element, Class III L Railway Track Scales. - *Class III L Railway Track Scales must be equipped with a recording element.*
[Nonretroactive as of January 1, 1996.]
(Added 1995)

UR.2. Installation Requirements.

UR.2.1. Supports. - A scale that is portable and that is being used on a counter, table, or the floor shall be so positioned that it is firmly and securely supported.

UR.2.2. Suspension of Hanging Scale. - A hanging scale shall be freely suspended from a fixed support when in use.

UR.2.3. Protection From Environmental Factors. - The indicating elements, the lever system or load cells, and the load-receiving element of a permanently installed scale, and the indicating elements of a scale not intended to be permanently installed, shall be adequately protected from environmental factors such as wind, weather, and RFI that may adversely affect the operation or performance of the device.

UR.2.4. Foundation, Supports, and Clearance. - The foundation and supports of any scale installed in a fixed location shall be such as to provide strength, rigidity, and permanence of all components, and clearance shall be provided around all live parts to the extent that no contacts may result when the load-receiving element is empty, nor throughout the weighing range of the scale. *On vehicle and livestock scales, the clearance between the load-receiving elements and the coping at the bottom edge of the platform shall be greater than at the top edge of the platform.*
[Nonretroactive as of January 1, 1973.]

UR.2.5. Access to Weighing Elements. - Adequate provision shall be made for ready access to the pit of a vehicle, livestock, animal, axle-load, or railway track scale for the purpose of inspection and maintenance. Any of these scales without a pit shall be installed with adequate means for inspection and maintenance of the weighing elements.
(Amended 1985)

UR.2.6. Approaches.

UR.2.6.1. Vehicle Scales.
[NOT ADOPTED]

UR.2.6.2. Axle-Load Scales. - At each end of an axle-load scale there shall be a straight paved approach in the same plane as the platform. The approaches shall be the same width as the platform and of sufficient length to insure the level positioning of vehicles during weight determinations.

UR.2.7. Stock Racks. - A livestock or animal scale shall be equipped with a suitable stock rack, with gates as required, which shall be securely mounted on the scale platform. Adequate clearances shall be maintained around the outside of the rack.

UR.2.8. Hoists. - On vehicle scales equipped with means for raising the load-receiving element from the weighing element for vehicle unloading, means shall be provided so that it is readily apparent to the scale operator when the load receiving element is in its designed weighing position.

UR.2.9. Provision for Testing Dynamic Monorail Weighing Systems. - Provisions shall be made at the time of installation of a dynamic monorail weighing systems for testing in accordance with N.1.3.6.1. (a rail around or other means for returning the test carcasses to the scale being tested).
[Nonretroactive as of January 1, 1998]
(Added 1997) (Amended 1999)

UR.3. Use Requirements.

UR.3.1. Recommended Minimum Load. - A recommended minimum load is specified in Table 8 since the use of a device to weigh light loads is likely to result in relatively large errors.

UR.3.1.1. Minimum Load, Grain Dockage Determination. - When determining the quantity of foreign material (dockage) in grain, the weight of the sample shall be equal to or greater than 500 scale divisions.
(Added 1985)

UR.3.2. Maximum Load. - A scale shall not be used to weigh a load of more than the nominal capacity of the scale.

UR.3.2.1. Maximum Loading for Vehicle Scales. - A vehicle scale shall not be used to weigh loads exceeding the maximum load capacity of its span as specified in Table UR.3.2.1.
(Added 1996)

UR.3.3. Single-Draft Vehicle Weighing. - A vehicle or a coupled vehicle combination shall be commercially weighed on a vehicle scale only as a single draft. That is, the total weight of such a vehicle or combination shall not be determined by adding together the results obtained by separately and not simultaneously weighing each end of such vehicle or individual elements of such coupled combination. However:

(a) the weight of a coupled combination may be determined by uncoupling the various elements (tractor, semitrailer, trailer), weighing each unit separately as a single draft, and adding together the results, or

(b) the weight of a vehicle or coupled-vehicle combination may be determined by adding together the weights obtained while all individual elements are resting simultaneously on more than one scale platform.

[Note: This paragraph does not apply to highway-law-enforcement scales and scales used for the collection of statistical data.]
(Added 1992)

Table 8.
Recommended Minimum Load

Class	Value of scale division (d or e*)	Recommended minimum load (d or e*)
I	equal to or greater than 0.001 g	100
II	0.001 to 0.05 g, inclusive equal to or greater than 0.1 g	20 7 50
III	All**	20
III L	All	50
IIII	All	10

* For Class I and II devices equipped with auxiliary reading means (i.e., a rider, a vernier, or a least significant decimal differentiated by size, shape or color), the value of the verification scale division "e" is the value of the scale division immediately preceding the auxiliary means. For Class III and IIII devices the value of "e" is specified by the manufacturer as marked on the device; "e" must be less than or equal to "d."

** A minimum load of 10d is recommended for a weight classifier marked in accordance with a statement identifying its use for special applications.
(Amended 1990)

UR.3.4. Wheel-Load Weighing.

UR.3.4.1. Use in Pairs. - When wheel-load weighers or portable axle-load weighers are to be regularly used in pairs, both weighers of each such pair shall be appropriately marked to identify them as weighers intended to be used in combination.

UR.3.4.2. Level Condition. – A vehicle of which either an axle-load determination or a gross-load determination is being made utilizing wheel-load weighers or portable axle-load weighers, shall be in a reasonably level position at the time of such determination.

UR.3.5. Special Designs. - A scale designed and marked for a special application (such as a prepackaging scale or prescription scale with a counting feature) shall not be used for other than its intended purpose.[4]
(Amended 2003)

UR.3.6. Wet Commodities. - Wet commodities not in watertight containers shall be weighed only on a scale having a pan or platform that will drain properly.
(Amended 1988)

UR.3.7. Minimum Load on a Vehicle Scale.
[NOT ADOPTED]

4002.2. Scales (2.20.)

(b) Minimum Load on a Vehicle Scale. Except for weighments of ferrous metals, cardboard, paper, rags or plastic, and the weighing of vehicles for registration purposes, a vehicle scale shall not be used for weighing net loads less than the value of 20 scale divisions.

[4] Prepackaging scales and prescription scales with a counting feature (and other commercial devices) used for putting up packages in advance of sale are acceptable for use in commerce only if all appropriate provisions of Handbook 44 are met. Users of such devices must be alert to the legal requirements relating to the declaration of quantity on a package. Such requirements are to the effect that, on the average, the contents of the individual packages of a particular commodity comprising a lot, shipment, or delivery must contain at least the quantity declared on the label. The fact that a prepackaging scale may overregister, but within established tolerances, and is approved for commercial service is not a legal justification for packages to contain, on the average, less than the labeled quantity. (Amended 2003)

4002.2. Scales (2.20.)

(c) Class III, Class III L and Unmarked Devices Used For Recycling. Except for weighments of ferrous metals, cardboard, paper, rags, or plastic, Class III, Class III L and unmarked devices used in recycling shall not be used for weighing net loads less than the value of 20 scale divisions.

UR.3.8. Minimum Load for Weighing Livestock. - A scale with scale divisions greater than 2 kg (5 lb) shall not be used for weighing net loads smaller than 500d.
(Amended 1989)

UR.3.9. Use of Manual Weight Entries. - Manual gross or net weight entries are permitted for use in the following applications only:

(a) when a point-of-sale system interfaced with a scale is giving credit for a weighed item;

(b) when an item is pre-weighed on a legal for trade scale and marked with the correct net weight;

(c) when a device or system is generating labels for standard weight packages;

(d) when postal scales or weight classifiers are generating manifests for packages to be picked up at a later time; or

(e) when livestock and vehicle scale systems generate weight tickets to correct erroneous tickets.

(Added 1992) (Amended 2000, 2004 and 2006)

UR.3.10. Dynamic Monorail Weighing Systems. – When the value of d is different from the value of e, the commercial transaction must be based on e.
(Added 1999)

UR.3.11. Minimum Count. – A prescription scale with an operational counting feature shall not be used to count a quantity of less than 30 pieces weighing a minimum of 90 e.
(Added 2003) (Amended 2004)

Note: The minimum count as defined in this paragraph refers to the use of the device in the filling of prescriptions and is different from the minimum sample piece count as defined in S.1.2.3. and as required to be marked on the scale by S.6.6.
(Note Added 2004)

UR.3.12. Correct Stored Piece Weight. – For prescription scales with a counting feature, the user is responsible for maintaining the correct stored piece weight. This is especially critical when a medicine has been reformulated or comes from different lots.
(Added 2003)

UR.4. Maintenance Requirements.

UR.4.1. Balance Condition. - The zero-load adjustment of a scale shall be maintained so that, with no load on the load-receiving element and with all load-counter-balancing elements of the scale (such as poises, drop weights, or counterbalance weights) set to zero, the scale shall indicate or record a zero balance condition. A scale not equipped to indicate or record a zero-load balance shall be maintained in balance under any no-load condition.

UR.4.2. Level Condition. - If a scale is equipped with a level-condition indicator, the scale shall be maintained in level.

UR.4.3. Scale Modification. - The dimensions (e.g., length, width, thickness, etc.) of the load receiving element of a scale shall not be changed beyond the manufacturer's specifications, nor shall the capacity of a scale be increased beyond its design capacity by replacing or modifying the original primary indicating or recording element with one of a higher capacity, except when the modification has been approved by a competent engineering authority, preferably that of the engineering department of the manufacturer of the scale, and by the weights and measures authority having jurisdiction over the scale.
(Amended 1996)

UR.5. Coupled-in-Motion Railroad Weighing Systems.- A coupled-in-motion weighing system placed in service on or after January 1, 1991, should be tested in the manner in which it is operated, with the locomotive either pushing or pulling the cars at the designed speed and in the proper direction. The cars used in the test train should represent the range of gross weights that will be used during the normal operation of the weighing system. Except as provided in N.4.2. and N.4.3.(a), normal operating procedures should be simulated as nearly as practical. Approach conditions for a train length in each direction of the scale site are more critical for a weighing system used for individual car weights than for a unit-train-weights-only facility, and should be considered prior to installation.
(Added 1990) (Amended 1992)

Table UR.3.2.1
Span Maximum Load

Distance in feet between the extremes of any group of 2 or more consecutive axles	Ratio of CLC to maximum load ("r" factor) carried on any group of 2 or more consecutive axles							
	2 axles	3 axles	4 axles	5 axles	6 axles	7 axles	8 axles	9 axles
4[1]	1.000							
5[1]	1.000							
6[1]	1.000							
7[1]	1.000							
8 and less[1]	1.000	1.000						
More than 8[1]	1.118	1.235						
9	1.147	1.257						
10	1.176	1.279						
11	1.206	1.301						
12	1.235	1.324	1.471	1.632				
13	1.265	1.346	1.490	1.651				
14	1.294	1.368	1.510	1.669				
15	1.324	1.390	1.529	1.688	1.853			
16	1.353	1.412	1.549	1.706	1.871			
17	1.382	1.434	1.569	1.724	1.888			
18	1.412	1.456	1.588	1.743	1.906			
19	1.441	1.478	1.608	1.761	1.924			
20	1.471	1.500	1.627	1.779	1.941			
21	1.500	1.522	1.647	1.798	1.959			
22	1.529	1.544	1.667	1.816	1.976			
23	1.559	1.566	1.686	1.835	1.994			
24	1.588	1.588	1.706	1.853	2.012	2.176		
25	1.618	1.610	1.725	1.871	2.029	2.194		
26		1.632	1.745	1.890	2.047	2.211		
27		1.654	1.765	1.908	2.065	2.228		
28		1.676	1.784	1.926	2.082	2.245	2.412	
29		1.699	1.804	1.945	2.100	2.262	2.429	
30		1.721	1.824	1.963	2.118	2.279	2.445	
31		1.743	1.843	1.982	2.135	2.297	2.462	
32		1.765	1.863	2.000	2.153	2.314	2.479	2.647
33			1.882	2.018	2.171	2.331	2.496	2.664
34			1.902	2.037	2.188	2.348	2.513	2.680
35			1.922	2.055	2.206	2.365	2.529	2.697
36			2.000[2]	2.074	2.224	2.382	2.546	2.713
37			2.000[2]	2.092	2.241	2.400	2.563	2.730
38			2.000[2]	2.110	2.259	2.417	2.580	2.746
39			2.000	2.129	2.276	2.434	2.597	2.763
40			2.020	2.147	2.294	2.451	2.613	2.779
41			2.039	2.165	2.312	2.468	2.630	2.796
42			2.059	2.184	2.329	2.485	2.647	2.813
43			2.078	2.202	2.347	2.502	2.664	2.829
44			2.098	2.221	2.365	2.520	2.681	2.846
45			2.118	2.239	2.382	2.537	2.697	2.862
46			2.137	2.257	2.400	2.554	2.714	2.879
47			2.157	2.276	2.418	2.571	2.731	2.895
48			2.176	2.294	2.435	2.588	2.748	2.912
49			2.196	2.313	2.453	2.605	2.765	2.928
50			2.216	2.331	2.471	2.623	2.782	2.945

INSTRUCTIONS:

1. Determine the scale's CLC.
2. Count the number of axles on the vehicle in a given span and determine the distance in feet between the first and last axle in the span.
3. Multiply the CLC by the corresponding multiplier in the table*.
4. The resulting number is the scale's maximum concentrated load for a single span based on the vehicle configuration.

*See note and formula on next page.

Table UR.3.2.1 Span Maximum Load								
Distance in feet between the extremes of any group of 2 or more consecutive axles	**Ratio of CLC to maximum load ("r" factor) carried on any group of 2 or more consecutive axles**							
	2 axles	3 axles	4 axles	5 axles	6 axles	7 axles	8 axles	9 axles
51			2.235	2.349	2.488	2.640	2.798	2.961
52			2.255	2.368	2.506	2.657	2.815	2.978
53			2.275	2.386	2.524	2.674	2.832	2.994
54			2.294	2.404	2.541	2.691	2.849	3.011
55			2.314	2.423	2.559	2.708	2.866	3.028
56			2.333	2.441	2.576	2.725	2.882	3.044
57			2.353[3]	2.460	2.594	2.742	2.899	3.061
58				2.478	2.612	2.760	2.916	3.077
59				2.496	2.629	2.777	2.933	3.094
60				2.515	2.647	2.794	2.950	3.110

* Note: This table was developed based upon the following formula. Values may be rounded in some cases for ease of use. (Amended 1999 and 2000)

$$W = r \; x \; 500 \left| \left(\frac{LN}{N - 1} \right) + 12N + 36 \right|$$

[1] Tandem Axle Weight.

[2] Exception - These values in the third column correspond to the maximum loads in which the inner bridge dimensions of 36, 37, and 38 feet are considered to be equivalent to 39 feet. This allows a weight of 68 000 lb on axles 2 through 5.

[3] Corresponds to the Interstate Gross Weight Limit.

SCALES CODE INDEX

Acceptance D2-9, D2-22, D2-23, D2-26, D2-28
Acceptance tolerance D2-9, D2-22, D2-26, D2-28
Access to weighing elements D2-33
Accuracy D2-8, D2-9, D2-11, D2-12, D2-13, D2-14, D2-15, D2-16, D2-22, D2-26, D2-31
Accuracy class D2-11, D2-14, D2-15, D2-16, D2-22, D2-31
Adjustable components D2-6, D2-11
Adjustment D2-6, D2-7, D2-11, D2-21, D2-35
Approaches D2-33
Audit trail D2-6
Automatic indicating scales D2-12, D2-18, D2-24
Automatic zero-tracking mechanism D2-7
Axle-load scales D2-1, D2-9, D2-17, D2-24, D2-32, D2-33

Balance condition D2-1, D2-2, D2-7, D2-9, D2-25, D2-30, D2-35
Balance indicator D2-1, D2-8, D2-9, D2-10, D2-25, D2-29
Balance indicators D2-25, D2-29
Balance position D2-3
Barometric pressure D2-26, D2-30

Capacity D2-4, D2-5, D2-8, D2-7, D2-8, D2-9, D2-10, D2-11, D2-12, D2-14, D2-15, D2-16, D2-17, D2-19, D2-18, D2-22, D2-23, D2-24, D2-25, D2-26, D2-29, D2-31, D2-32, D2-34, D2-36
Capacity indication D2-5
Center-of-zero D2-1, D2-2
Class D2-6, D2-7, D2-9, D2-10, D2-11, D2-13, D2-14, D2-15, D2-16, D2-18, D2-19, D2-22, D2-23, D2-24, D2-27, D2-26, D2-28, D2-29, D2-30, D2-31, D2-32, D2-34, D2-35
Clearance D2-3, D2-9, D2-32
Computing scale D2-5, D2-6, D2-9
Consecutive-car test D2-19, D2-20, D2-21
Coupled-in-motion D2-19, D2-27, D2-36
Coupled-in-motion railroad weighing systems D2-27, D2-36
Crane and hopper (other than grain hopper) D2-13, D2-26
Crane scales D2-17, D2-32
Customer's indications D2-6

Dairy-product-test D2-9, D2-16, D2-23, D2-24
Damping means D2-9
Decreasing-load test D2-12, D2-16
Direct sales D2-4, D2-6, D2-7, D2-10
Discrimination test D2-18
Distributed-car test D2-20, D2-21

Electric power supply D2-30
Environmental factors D2-18, D2-32

Foundation D2-32

Graduations D2-2, D2-3, D2-4, D2-5, D2-6, D2-9
Grain test scales D2-23, D2-25, D2-31
Grain-test D2-9, D2-31

Hanging scale D2-32
Hanging scales D2-17
Hoists D2-33
Hopper scales D2-17, D2-26, D2-31, D2-32

I D2-6, D2-7, D2-8, D2-9, D2-10, D2-11, D2-13, D2-15, D2-16, D2-17, D2-18, D2-22, D2-23, D2-26, D2-27, D2-28, D2-29, D2-30, D2-31, D2-34
II D2-7, D2-8, D2-9, D2-10, D2-11, D2-13, D2-15, D2-16, D2-22, D2-23, D2-26, D2-27, D2-28, D2-29, D2-30, D2-31, D2-34
III D2-8, D2-11, D2-13, D2-15, D2-16, D2-19, D2-22, D2-23, D2-24, D2-26, D2-27, D2-26, D2-28, D2-29, D2-30, D2-31, D2-34, D2-35
III L D2-11, D2-15, D2-16, D2-19, D2-22, D2-23, D2-26, D2-27, D2-26, D2-28, D2-29, D2-30, D2-31, D2-34, D2-35
IIII D2-11, D2-13, D2-15, D2-16, D2-22, D2-23, D2-26, D2-27, D2-26, D2-28, D2-29, D2-30, D2-31, D2-34
Increasing-load test D2-12, D2-16
Index of an indicator D2-3
Indicating element D2-12, D2-14, D2-15, D2-27, D2-28
Indicator D2-1, D2-2, D2-3, D2-5, D2-6, D2-8, D2-9, D2-10, D2-15, D2-25, D2-28, D2-29, D2-36
Influence factors D2-26, D2-29
Initial verification D2-20, D2-21
Initial zero-setting mechanism D2-8
Installation requirements D2-31

Jewelers' scales D2-23, D2-24

Level D2-7, D2-9, D2-17, D2-33, D2-35, D2-36
Level condition D2-35, D2-36
Level-indicating means D2-9
Livestock scale D2-35
Livestock scales D2-7, D2-11, D2-15, D2-16, D2-17, D2-25, D2-32
Load cell D2-11, D2-14, D2-15, D2-16
Load cell verification interval D2-11, D2-14

Main elements D2-12, D2-27
Maintenance D2-22, D2-23, D2-27, D2-26, D2-27, D2-28, D2-33, D2-35
Maintenance requirements D2-35
Maintenance tolerance D2-22, D2-23, D2-26, D2-27, D2-28
Manual gross weight entries D2-7, D2-35
Marking requirements D2-11, D2-14

Material test D2-18, D2-24
Minimum load D2-34, D2-35
Minimum test weights D2-18, D2-19
Money-value computation D2-6
Money-value graduations D2-5
Monorail scale D2-8, D2-9
Multirange D2-11, D2-26

No-load reference value D2-2
Nominal capacity D2-4, D2-10, D2-11, D2-12, D2-14, D2-15, D2-16, D2-17, D2-22, D2-25, D2-34

Operating temperature D2-25, D2-30

Parallax D2-3
Parcel post scales D2-22, D2-24
Point of sale systems D2-6
Poise D2-4, D2-5
Portable axle-load weighers D2-1, D2-17, D2-26, D2-31, D2-35
Postal D2-2, D2-5, D2-15, D2-22, D2-24, D2-31, D2-35
Power interruption D2-30
Prepackaging scale (D2-6), (D2-35), (D2-36)
Prescription D2-9, D2-10, D2-13, D2-22, D2-23, D2-24
Provision for sealing D2-6

Railway track scales D2-7, D2-10, D2-12, D2-15, D2-17, D2-18, D2-19, D2-18, D2-23, D2-25, D2-31, D2-32
Ratio test D2-18
Readability D2-4
Recorded representations D2-1, D2-6
Recording elements D2-1, D2-10, D2-28
Repeatability D2-28
RFI D2-18, D2-25, D2-30, D2-32

Scale modification D2-36
Sealing D2-6, D2-7, D2-8
Security seal D2-6
Sensitivity requirement D2-23, D2-25
Sensitivity test D2-17
Shift test D2-16, D2-17, D2-28
Stock racks D2-33
Strain-load test D2-18
Subsequent verification D2-21, D2-26
Supports D2-12, D2-31, D2-32
Symmetry D2-3

Temperature D2-14, D2-25, D2-26, D2-29, D2-30
Temperature effect on zero-load D2-30
Test loads D2-12, D2-16, D2-17, D2-18, D2-19, D2-22, D2-24, D2-25, D2-26, D2-28
Time dependence D2-28
Tolerances D2-8, D2-10, D2-18, D2-22, D2-23, D2-26, D2-27, D2-26, D2-27, D2-28, D2-36
Travel D2-3, D2-4, D2-10, D2-21
Type evaluation D2-12, D2-26, D2-27

Uncoupled-in-motion D2-21, D2-27
Uncoupled-in-motion railroad weighing system D2-21
Unit weights D2-5, D2-16, D2-28
Use requirements D2-34

Value of scale division D2-2, D2-14, D2-34
Vehicle on-board weighing system D2-7, D2-9, D2-17
Vehicle scale D2-34, D2-35
Vehicle scales D2-7, D2-17, D2-33

Weighbeam D2-3, D2-4, D2-5, D2-17, D2-25, D2-28, D2-29, D2-32
Weighing elements D2-10, D2-17, D2-33
Weight ranges D2-5, D2-16
Weight units D2-2
Wheel-load weighers D2-1, D2-9, D2-17, D2-24, D2-26, D2-31, D2-32, D2-35
Wheel-load weighing D2-35

Zero indication D2-1, D2-30
Zero-load adjustment D2-7, D2-35
Zero-load balance D2-6, D2-7, D2-8, D2-9, D2-18, D2-30, D2-35

Sec. 2.21. Belt-Conveyor Scale Systems

A. Application

A.1. This code applies to belt-conveyor scale systems used for the weighing of bulk materials.

A.2. The code does not apply to:

(a) devices used for discrete weighing while moving on conveyors;

(b) devices that measure quantity on a time basis;

(c) check-weighers; or

(d) controllers or other auxiliary devices except as they may affect the weighing performance of the belt-conveyor scale.

A.3. See also General Code requirements.

S. Specifications

S.1. Design of Indicating and Recording Elements.

S.1.1. General. - A belt-conveyor scale shall be equipped with a primary indicating element in the form of a master weight totalizer *and shall also be equipped with a recording element, and a rate of flow indicator and recorder (which may be analog).** An auxiliary indicator shall not be considered part of the master weight totalizer.
*[*Nonretroactive as of January 1, 1986.]*
(Amended 1986)

S.1.2. Units. - A belt-conveyor scale shall indicate and record weight units in terms of pounds, tons, long tons, metric tons, or kilograms. The value of a scale division (d) expressed in a unit of weight shall be equal to:

(a) 1, 2, or 5, or

(b) a decimal multiple or submultiple of 1, 2, or 5.

S.1.3. Value of the Scale Division.

S.1.3.1. For Scales Installed After January 1, 1986. *The value of the scale division shall not be greater than 0.1 percent (1/1 000) of the minimum totalized load.*
[Nonretroactive as of January 1, 1986.]

S.1.3.2. For Scales Installed Before January 1, 1986. - The value of the scale division shall not be greater than 1/1200 of the rated capacity of the device. However, provision shall be made so that compliance with the requirements of the zero-load test as prescribed in N.3.1. may be readily and accurately determined in 20 minutes of operation.

S.1.4. Recording Elements and Recorded Representations. - *The value of the scale division of the recording element shall be the same as that of the indicating element. The belt-conveyor scale system shall record the initial indication and the final indication of the master weight totalizer*, the quantity delivered*, the unit of measurement (i.e., kilograms, tonnes, pounds, tons, etc.), the date, and time. This information shall be recorded for each delivery*.*
[Nonretroactive as of January 1, 1986.]
*[*Nonretroactive as of January 1, 1994.]*
(Amended 1993)

S.1.4.1. *The belt-conveyor scale system shall be capable of recording the results of automatic or semi-automatic zero load tests.***
*[**Nonretroactive as of January 1, 2004.]*
(Added 2002)

S.1.5. Rate of Flow Indicators and Recorders. - *A belt-conveyor scale shall be equipped with a rate of flow indicator and an analog or digital recorder. Permanent means shall be provided to produce an audio or visual signal when the rate of flow is equal to or less than 20% and when the rate of flow is equal to or greater than 100% of the rated capacity of the scale. The type of alarm (audio or visual) shall be determined by the individual installation.*
[Nonretroactive as of January 1, 1986.]
(Amended 1989 and 2004)

S.1.6. Advancement of Primary Indicating or Recording Elements. - The master weight totalizer shall advance only when the belt conveyor is in operation and under load.
(Amended 1989)

S.1.7. Master Weight Totalizer. - *The master weight totalizer shall not be resettable without breaking a security means.*
[Nonretroactive as of January 1, 1986.]

S.1.8. Power Loss. - *In the event of a power failure of up to 24 hours, the accumulated measured quantity on the master weight totalizer of an electronic digital indicator shall be retained in memory during the power loss.*
[Nonretroactive as of January 1, 1986.]
(Amended 1989)

S.2. Design of Weighing Elements. - A belt-conveyor scale system shall be designed to combine automatically belt travel with belt load to provide a determination of the weight of the material that has passed over the scale.

S.2.1. Speed Measurement. - A belt-conveyor scale shall be equipped with a belt speed or travel sensor that will accurately sense the belt speed or travel whether the belt is empty or loaded.

S.2.2. Adjustable Components. - An adjustable component that can affect the performance of the device (except as prescribed in S.3.1) shall be held securely in adjustment and shall not be capable of adjustment without breaking a security means.

S.2.3. Overload Protection. - The load-receiving elements shall be equipped with means for overload protection of not less than 150 percent of rated capacity. The accuracy of the scale in its normal loading range, shall not be affected by overloading.

S.3. Zero Setting.

S.3.1. Design of Zero-Setting Mechanism. - Automatic and semiautomatic zero-setting mechanisms shall be so constructed that the resetting operation is carried out only after a whole number of belt revolutions and the completion of the setting or the whole operation is indicated. *An audio or visual signal shall be given when the automatic and semiautomatic zero-setting mechanisms reach the limit of adjustment of the zero-setting mechanism.**

Except for systems that record the zero load reference at the beginning and end of a delivery, the range of the zero-setting mechanism shall not be greater than ±2% of the rated capacity of the scale without breaking the security means. *For systems that record the zero load reference at the beginning and end of a delivery, the range of zero-setting mechanism shall not be greater than ±5% without breaking the security means.***

*[*Nonretroactive as of January 1, 1990]*
*[**Nonretroactive as of January 1, 2004]*
(Amended 1989, 2002 and 2005)

S.3.2. Sensitivity at Zero Load (For Type Evaluation). - *When a system is operated for a time period equal to the time required to deliver the minimum test load and with a test load calculated to indicate two scale divisions applied directly to the weighing element, the totalizer shall advance not less than one or more than three scale divisions. An alternative test of equivalent sensitivity, as specified by the manufacturer, shall also be acceptable.*
[Nonretroactive as of January 1, 1986.]

S.4. Marking Requirements. - A belt-conveyor scale shall be marked with the following: (Also see G-S.1.)

(a) the rated capacity in units of weight per hour (minimum and maximum);

(b) the value of the scale division;

(c) the belt speed in terms of feet (or meters) per minute at which the belt will deliver the rated capacity;

(d) the load in terms of pounds per foot or kilograms per meter (determined by materials tests);

(e) the operational temperature range if other than -10 to 40 °C (14 to 104 °F).
[Nonretroactive as of January 1, 1986.]

S.5. Provision for Sealing. - *A device shall be designed using the format set forth in Table S.5. with provision(s) for applying a security seal that must be broken, or for using other approved means of providing security (e.g. data change audit trail available at the time of inspection), before any change that affects the metrological integrity of the device can be made to any electronic mechanism.*
[Nonretroactive as of January 1, 1999]
Added 1998)

Table S.5. Categories of Device and Methods of Sealing

Categories of Devices	*Method of Sealing*
Category 1: No remote configuration capability.	*Seal by physical seal or two event counters: one for calibration parameters and one for configuration parameters.*
Category 3: Remote configuration capability.	*An event logger is required in the device; it must include an event counter (000 to 999), the parameter ID, the date and time of the change, and the new value of the parameter. A printed copy of the information must be available through the device or through another on-site device. The event logger shall have a capacity to retain records equal to ten times the number of sealable parameters in the device, but not more than 1000 records are required. (Note: Does not require 1000 changes to be stored for each parameter.)*

(Nonretroactive as January 1, 1998) (Table Added 1998)

N. Notes

N.1. General. - Belt-conveyor scales are capable of weighing bulk material accurately. (See Tolerances.) However, their performance can be detrimentally affected by the conditions of the installation. (See User Requirements.) The performance of the equipment is not to be determined by averaging the results of the individual tests. The results of all tests shall be within the tolerance limits.
(Amended 2002)

N.1.1. Official Test. - An official test of a belt-conveyor scale system shall include tests specified in N.3.1. Zero Load Tests, N.3.2. Material Tests, and, if applicable, N.3.3. Simulated Load Tests.
(Amended 2006)

N.1.2. Simulated Test. - Simulated loading conditions as recommended by the manufacturer and approved by the official with statutory authority may be used to properly monitor the systems operational performance between official tests, but shall not be used for official certification.
(Amended 1991)

N.2. Conditions of Tests. - A belt-conveyor scale shall be tested after it is installed on the conveyor system with which it is to be used and under such environmental conditions as may normally be expected. Each test shall be conducted with test loads no less than the minimum test load.
(Amended 1986 and 2004)

N.2.1. Initial Verification. – A belt-conveyor scale system shall be tested at the normal use flow rate, 35% of the maximum rated capacity, and an intermediate flow rate between these two points. The system may also be tested at any other rate of flow that may be used at the installation.
(Added 2004)

N.2.2. Subsequent Verification. – Subsequent testing shall include testing at the normal use flow rate and other flow rates used at the installation. The official with statutory authority may determine that testing only at the normal use flow rate is necessary for subsequent verifications if evidence is provided that the system is used to operate:

(a) at no less than 70% of the maximum rated capacity for at least 80% of the time (excluding time that the belt is unloaded), or

(b) with a normal use flow rate that does not vary by more than 10% of the maximum rated capacity.

Example: If a belt-conveyor scale system has a maximum rated capacity of 200 tons per hour (tph), and the normal use flow rate is 150 tph (75% of the maximum rated capacity), no testing at additional flow rates is required provided the flow rates remain above 140 tph for more than 80% of the time. If the same device were operating operating with a normal use flow rate of 130 tph, it is operating at 65% of the maximum rated capacity. In this case, testing at flow rates in addition to the normal use flow rate would be required if the nrmal use flow rate varies by more than 20 tph (10% of the maximum rated capacity).
(Added 2004)

N.2.3. Minimum Test Load. – The minimum test load shall not be less than the largest of the following values.

(a) 800 scale divisions,

(b) the load obtained at maximum flow rate in one revolution of the belt, or

(c) at least 10 minutes of operation.

The official with statutory authority may determine that a smaller minimum totalized load down to 2% of the load totalized in one hour at the maximum flow rate may be used for subsequent tests, provided that:

1. the smaller minimum totalized load is greater than the quantities specified in (a) and (b), and

2. consecutive official testing with the minimum totalized loads described in N.2.3. (a), (b), or (c) and the smaller minimum test load has been conducted that demonstrates the system complies with applicable tolerances for repeatability, acceptance, and maintenance.

(Added 2004)

N.3. Test Procedures.

N.3.1. Zero Load Tests. - A zero-load test shall be conducted to establish that the belt scale system (including the conveyor) is capable of holding a stable, in-service zero.
(Amended 1989 and 2002)

N.3.1.1. Determination of Zero. - A "Zero-Load Test" is a determination of the error in zero, expressed as an internal reference, a percentage of the full-scale capacity, or a change in a totalized load over a whole number of complete belt revolutions. For belt-conveyor scales with electronic integrators, the test must be performed over a period of at least 3 minutes and with a whole number of complete belt revolutions. For belt-conveyor scales with mechanical integrators, the test shall be performed with no less than three complete revolutions or 10 minutes operation, whichever is greater.
(Added 2002)

N.3.1.2. Initial Stable Zero. - The conveyor system shall be run to warm up the belt and the belt scale shall be zero adjusted as required. A series of zero-load tests shall be carried out until three consecutive zero-load tests each indicate an error which does not exceed ± 0.06% of the totalized load at full scale capacity for the duration of the test. No adjustments can be made during the three consecutive zero-load test readings.
(Added 2002) (Amended 2004)

N.3.1.3. Test of Zero Stability. - The conveyor system shall be operated to warm up the belt and the belt scale shall be zero adjusted as required. A series of zero-load tests shall be carried out immediately before the simulated or materials test until the three consecutive zero-load tests each indicate an error which does not exceed ± 0.06% of the totalized load at full scale capacity for the duration of the test. No adjustments can be made during the three consecutive zero-load test readings.
(Added 2002) (Amended 2004)

N.3.1.4. Check For Consistency of the Conveyor Belt Along Its Entire Length. - After a zero-load test with flow rate filtering disabled, the totalizer shall not change more than plus or minus (± 3d) three scale divisions from its initial indication during one complete belt revolution.
(Added 2002) (Amended 2004)

N.3.2. Material Tests. – Material tests should be conducted using actual belt loading conditions. These belt loading conditions shall include, but are not limited to conducting materials tests using different belt loading points, all types and sizes of products weighed on the scale, at least one other belt speed, and in both directions of weighing.

On initial verification, at least 3 individual material tests shall be conducted. On subsequent verifications, at least 2 individual tests shall be conducted. The results of all these tests shall be within the tolerance limits.
(Amended 2005)

Either pass a quantity of pre-weighed material over the belt-conveyor scale in a manner as similar as feasible to actual loading conditions, or weigh all material that has passed over the belt-conveyor scale. Means for weighing the material test load will depend on the capacity of the belt-conveyor scale and availability of a suitable scale for the test. To assure that the test load is accurately weighed and determined, the following precautions shall be observed:
(Amended 2002)

(a) The containers, whether railroad cars, trucks, or boxes, must not leak, and shall not be overloaded to the point that material will be lost.

(b) The actual empty or tare weight of the containers shall be determined at the time of the test. Stenciled tare weight of railway cars or trucks shall not be used. Gross and tare weights shall be determined on the same scale.

(c) When a pre-weighed test load is passed over the scale, the belt loading hopper shall be examined before and after the test to assure that the hopper is empty and that only the material of the test load has passed over the scale.

(d) Where practicable, a reference scale should be tested within 24 hours preceding the determination of the weight of the test load used for a belt-conveyor scale material test.

A reference scale which is not "as found" within maintenance tolerance should have its accuracy re-verified after the belt-conveyor test with a suitable known weight load if the "as found" error of the belt-conveyor scale material test exceeds maintenance tolerance values.

(e) If any suitable known weight load other than a certified test weight load is used for re-verification of the reference scale accuracy, its weight shall be determined on the reference scale after the reference scale certification and before commencing the belt scale material test.

Note: Even if the reference scale is within maintenance tolerance it may require adjusting to be able to meet paragraph N.3.2.1.

(f) The test shall not be conducted if the weight of the test load has been affected by environmental conditions.
(Amended 1986, 1989, 1998, 2000 and 2002)

N.3.2.1. Accuracy of Material. - The quantity of material used to conduct a material test shall be weighed on a reference scale to an accuracy within 0.1 percent. Scales typically used for this purpose include Class III and III L scales or a scale without a class designation as described in Handbook 44, Section 2.20, Table T.1.1.
(Added 1989) (Amended 1991, 1993, 1998 and 2000)

N.3.3. Simulated Load Tests.

(a) As required by the official with statutory authority, simulated load tests as recommended by the manufacturer are to be conducted between material tests to monitor the system's operational performance, but shall not be used for official certification.
(Amended 1991)

(b) A simulated load test consisting of at least three consecutive test runs shall be conducted as soon as possible, but not more than 12 hours after the completion of the material test, to establish the factor to relate the results of the simulated load test to the results of the material tests.
(Added 1990)

(c) The results of the simulated load test shall repeat within 0.1%.
(Added 1990)

(Amended 1989 and 1990)

T. Tolerances

T.1. Tolerance Values[1]. - Maintenance and acceptance tolerances on materials tests, relative to the weight of the material, shall be ± 0.25% of the test load.
(Amended 1993)

T.1.1. Tolerance Values – Test of Zero Stability. Immediately after material has been weighed over the belt-conveyor scale during the conduct of the materials test, the zero-load test shall be repeated. The change in the accumulated or subtracted weight on the Master Weight Totalizer during the zero test shall not exceed 0.12% of the totalized load at full scale capacity for the duration of the test.
(Added 2004)

T.2. Tolerance Values, Repeatability Tests. - The variation in the values obtained during the conduct of materials tests shall not be greater than 0.25 percent (1/400).

T.3. Influence Factors. - The following factors are applicable to tests conducted under controlled conditions only, provided that:

(a) types of devices approved prior to January 1, 1986, and manufactured prior to January 1, 1988, need not meet the requirements of this Section; and

(b) new types of devices submitted for approval after January 1, 1986, shall comply with the requirements of the Section; and

(c) all devices manufactured after January 1, 1988, shall comply with the requirements of this Section.

T.3.1. Temperature. - Devices shall satisfy the tolerance requirements at temperatures from -10 °C to 40 °C (14 °F to 104 °F).

T.3.1.1. Effect on Zero-Load Balance. - The zero-load indication shall not change by more than 0.035% of the rated capacity of the scale (without the belt) for a change in temperature of 10 °C (18 °F) at a rate not to exceed 5 °C (9 °F) per hour.
(Amended 2004)

T.3.1.2. Temperature Limits. *- If a temperature range other than -10 °C to 40 °C (14 °F to 104 °F) is specified for the device, the range shall be at least 30 °C (54 °F).*
[Nonretroactive as of January 1, 1990.]
(Added 1989)

T.3.2. Power Supply, Voltage and Frequency. - A belt-conveyor scale system shall satisfy the tolerance requirements over a range of 100 to 130 V or 200 to 250 V as appropriate and over a frequency range of 59.5 to 60.5 Hz.

UR. User Requirements

UR.1. Use Requirements. - A belt-conveyor scale system shall be operated between 20% and 100% of its rated capacity.
(Amended 2004)

UR.1.1. Minimum Totalized Load. - Delivered quantities of less than the minimum test load shall not be considered a valid weighment.

UR.1.2. Security Means. - When a security means has been broken, it shall be reported to the official with statutory authority.
(Amended 1991)

[1] The variables and uncertainties included in the relative tolerance represent only part of the variables that affect the accuracy of the material weighed on belt-conveyor scales. If this tolerance was based on an error analysis beginning with mass standards through all of the test processes and following the principle expressed in Section 3.2. of the Fundamental Considerations in Appendix A of Handbook 44, the tolerance would be 0.5 percent.
(Added 1993)

UR.2. Installation Requirements.

UR.2.1. Protection from Environmental Factors. - The indicating elements, the lever system or load cells, and the load-receiving element of a belt-conveyor scale shall be adequately protected from environmental factors such as wind, moisture, dust, weather, and radio frequency interference (RFI) and electromagnetic interference (EMI) that may adversely affect the operation or performance of the device.

UR.2.2. Conveyor Installation. - The design and installation of the conveyor leading to and from the belt-conveyor scale is critical with respect to scale performance. The conveyor may be horizontal or inclined, but if included, the angle shall be such that slippage of material along the belt does not occur. Installation shall be in accordance with the scale manufacturer's instructions and the following:
(Amended 2002)

(a) **Installation - General. -** A belt-conveyor scale shall be so installed that neither its performance nor operation will be adversely affected by any characteristic of the installation, including but not limited to, the foundation, supports, covers, or any other equipment.
(Amended 2002)

(b) **Live Portions of Scale. -** All live portions of the scale shall be protected with appropriate guard devices and clearances, as recommended by the scale manufacturer, to prevent accidental interference with the weighing operation. (Also see UR.3.2.)
(Amended 2004)

(c) **Storage of Simulated Load Equipment. -** Suitable protection shall be provided for storage of any simulated load equipment.

(d) **Take-up Device. -** If the belt length is such that a take-up device is required, this device shall be of the counter-weighted type for either vertical or horizontal travel.

(e) **Scale Location and Training Idlers. -** The scale shall be so installed that the first weigh idler of the scale is at least 6 m (20 ft) or 5 idler spaces, whichever is greater, from loading point, skirting, head or tail pulley, or convex curve in the conveyor. Any training idler shall be located at least 18 m (60 ft) from the center line of the weigh span of the scale. Training idlers shall not be restrained at any time in order to force belt alignment.
(Amended 1998)

(f) **Concave Curve. -** If there is a concave curve in the conveyor, before or after the scale, the scale shall be installed so that the belt is in contact with all the idler rollers at all times for at least 6 m (20 ft) or 5 idler spaces, whichever is greater, before and after the scale.[2] A concave curve shall start no closer than 12 m (40 ft) from the scale to the tangent point of the concave curve.
(Amended 1998)

(g) **Tripper and Movable Pulleys. -** There shall be no tripper or movable head pulleys in the conveyor.

(h) ***Conveyor Length.*** *- The conveyor shall be no longer than 300 m (1000 ft) nor shorter than 12 m (40 ft) from head to tail pulley.*
[Nonretroactive as of January 1, 1986.]

(i) **Conveyor Orientation -** The conveyor may be horizontal or inclined, but, if inclined, the angle shall be such that slippage of material along the belt does not occur.

(j) **Conveyor Stringers. -** Conveyor stringers at the scale and for not less than 6 m (20 ft) before and beyond the scale shall be continuous or securely joined and of sufficient size and so supported as to eliminate relative deflection between the scale and adjacent idlers when under load. The conveyor stringers should be so designed that the deflection between any two adjacent idlers within the weigh area does not exceed 0.6 mm (0.025 in) under load.

(k) **Identification of Scale Area. -** The scale area and 5 idlers on both ends of the scale shall be of a contrasting color, or other suitable means shall be used to distinguish the scale from the remainder of the conveyor installation, and the scale shall be readily accessible.
(Amended 1998)

[2] Installing the belt scale 5 idler spaces from the tail pulley or the infeed skirting will be in the area of least belt tension on the conveyor and should produce the best accuracy. The performance of a belt-conveyor scale may be adversely affected by a concave curve in the conveyor that is located between the loading point and the scale. Therefore, whenever possible, a belt-conveyor scale should not be installed with a concave curve in the conveyor between the loading point and the scale.
(Amended 1995 and 1998)

(l) **Belt Composition and Maintenance.** - Conveyor belting shall be no heavier than is required for normal use. In a loaded or unloaded condition, the belt shall make constant contact with horizontal and wing rollers of the idlers in the scale area. Splices shall not cause any undue disturbance in scale operation (see N.3.).
(Amended 1998, 2000 and 2001)

(m) **Uniformity of Belt Loading and Flow.** - The conveyor loading mechanism shall be designed to provide uniform belt loading. The distance from the loading point to the scale shall allow for adequate settling time of the material on the belt before it is weighed. Feeding mechanisms shall have a positive closing or stopping action so that material leakage does not occur. Feeders shall provide an even flow over the scale through the full range of scale operation. Sufficient impact idlers shall be provided in the conveyor under each loading point to prevent deflection of the belt during the time material is being loaded.

(n) **Belt Alignment.** - The belt shall not extend beyond the edge of the idler roller in any area of the conveyor.
(Amended 1998)

(Amended 2000)

UR.2.3. Material Test. *- A belt-conveyor scale shall be installed so that a material test can be conveniently conducted.*
[Nonretroactive as of January 1, 1981.]

UR.2.4. Belt Travel (Speed or Velocity). - The belt travel sensor shall be so positioned that it accurately represents the travel of the belt over the scale for all flow rates between the maximum and minimum values. The belt travel sensor shall be so designed and installed that there is no slip.

UR.3. Use Requirements.

UR.3.1. Loading. - The feed of material to the scale shall be controlled to assure that, during normal operation, the material flow is in accordance with manufacturer's recommendation for rated capacity.

UR.3.2. Maintenance. - Belt-conveyor scales and idlers shall be maintained and serviced in accordance with manufacturer's instructions and the following:

(a) The scale and area surrounding the scale shall be kept clean of debris or other foreign material that can detrimentally affect the performance of the system.

(b) There shall be provisions to ensure that weighed material does not adhere to the belt and return to the scale system area.
(Added 2004)

(c) Simulated load tests or material tests, and zero load tests shall be conducted at periodic intervals between official tests in order to provide reasonable assurance that the device is performing correctly.
(Amended 2004)

The action to be taken as a result of the material tests or simulated load tests is as follows:
(Amended 2000 and 2002)

- if the error is less than 0.25 percent, no adjustment is to be made;

- if the error is at least 0.25 percent but not more than 0.6 percent, adjustment may be made if the official with statutory authority is notified;
(Amended 1991)

- if the error is greater than 0.6 percent but does not exceed 0.75 percent, adjustments shall be made only by a competent service person and the official with statutory authority shall be notified. After such an adjustment, if the results of a subsequent test require adjustment in the same direction, an official test shall be conducted;
(Amended 1991)

- if the error is greater than 0.75 percent, an official test is required.
(Amended 1987)

(d) Scale Alignment. - Alignment checks shall be conducted in accordance with the manufacturer's recommendation when conveyor work is performed in the scale area. A material test is required after any realignment.
(Amended 1986, 2000 and 2004)

(e) Simulated Load Equipment. - Simulated load equipment shall be clean and properly maintained.
(Amended 2004)

(f) Zero Load Reference Information. – When zero load reference information is recorded for a delivery, the information must be based upon zero load tests performed as a minimum both immediately before and immediately after the totalized load.
(Added 2002) (Amended 2004)

UR.3.3. Retention of Maintenance, Test, and Analog or Digital Recorder Information. - Records of calibration and maintenance, including conveyor alignment, analog or digital recorder, zero-load test, and material test data shall be maintained on site for at least the three concurrent years as a history of scale performance. Copies of any report as a result of a test or repair shall be mailed to the official with statutory authority as required. The current date and correction factor(s) for simulated load equipment shall be recorded and maintained in the scale cabinet.
(Added 2002)

UR.3.4. Diversion or Loss of Measured Product. – There shall be no operation(s) or condition(s) of use that result in loss or diversion that adversely affects the quantity of measured product.
(Added 2005)

UR.4. Compliance. - Prior to initial verification, the scale manufacturer or installer shall certify to the owner that the scale meets code requirements. Prior to initial verification and each subsequent verification, the scale owner or his agent shall notify the official with statutory authority in writing that the belt-conveyor scale system is in compliance with this specification and ready for material testing.
(Amended 1991)

Sec. 2.22. Automatic Bulk Weighing Systems[1]

A. Application

A.1. General. - This code applies to automatic bulk weighing systems, that is, weighing systems adapted to the automatic weighing of a commodity in successive drafts of predetermined amounts automatically recording the no-load and loaded weight values and accumulating the net weight of each draft.
(Amended 1987)

A.2. Also see General Code requirements.

S. Specifications

S.1. Design of Indicating and Recording Elements and Recorded Representations.

S.1.1. Zero Indication. - Provisions shall be made to indicate and record a no-load reference value and, if the no-load reference value is a zero value indication, to indicate and record an out-of-balance condition on both sides of zero.

S.1.1.1. Digital Zero Indication. - A digital zero indication shall represent a balance condition that is within ± 1/2 the value of the scale division.

S.1.2. Value of Scale Division (d). *- The value of the scale division (d), expressed in a unit of weight, shall be equal to:*

(a) 1, 2, or 5; or

(b) a decimal multiple or submultiple of 1, 2, or 5; or

(c) a binary submultiple of a unit of weight.

Examples: Scale divisions may be 0.01, 0.02, or 0.05; 0.1, 0.2, or 0.5; 1, 2, or 5; 10, 20, or 50; or 1/2, 1/4, 1/8, 1/16, etc.
[Nonretroactive as of January 1, 1986.]
(Amended 1987)

S.1.3. Capacity Indication and Recorded Representation. An indicating or recording element shall not indicate or record any values when the gross load is in excess of 105 percent of the capacity of the system.

S.1.4. Weighing Sequence. - For systems used to receive (weigh in), the no-load reference value shall be determined and recorded only at the beginning of each weighing cycle. For systems used to deliver (weigh out), the no-load reference value shall be determined and recorded only after the gross load reference value for each weighing cycle has been indicated and recorded.

S.1.5. Recording Sequence. - Provision shall be made so that all weight values are indicated until the completion of the recording of the indicated value.

S.1.6. Provision for Sealing Adjustable Components on Electronic Devices. - Provision shall be made for applying a security seal in a manner that requires the security seal to be broken before an adjustment can be made to any component affecting the performance of the device.

S.2. Design of Balance and Damping Mechanism.

S.2.1. Zero-Load Adjustment. - The weighing system shall be equipped with manual or semiautomatic means by which the zero-load balance or no-load reference value indication may be adjusted. An automatic zero-tracking mechanism is prohibited.

S.2.1.1. Manual. - A manual zero-load or no-load reference value setting mechanism shall be operable or accessible only by a tool outside of or entirely separate from this mechanism or enclosed in a cabinet.

S.2.1.2. Semiautomatic. - A semiautomatic zero-load or no-load reference value setting mechanism shall meet the provisions of S.2.1.1. or shall be operable only when:

(a) the indication is stable within ±3 scale divisions, and

(b) cannot be operated during a weighing operation.

S.2.2. Damping Means. - A system shall be equipped with effective means necessary to bring the indications quickly to a readable, stable equilibrium. Effective means shall also be provided to permit the recording of weight values only when the indication is stable within plus or minus three scale divisions for devices with 10 000 scale divisions, or plus or minus one division for devices with less than 10 000 scale divisions.

[1](Title amended 1986)

S.3. Interlocks and Gate Control.

S.3.1. Gate Position. - Provision shall be made to clearly indicate to the operator the position of the gates leading directly to and from the weigh hopper.

S.3.2. Interlocks. - Each automatic bulk weighing system shall have operating interlocks to provide for the following:

(a) Product cannot be cycled and weighed if the weight recording element is disconnected or subjected to a power loss.

(b) The recording element cannot print a weight if either of the gates leading directly to or from the weigh hopper is open.

(c) A "low paper" sensor, when provided, is activated.

(d) The system will operate only in the proper sequence in all modes of operation.

(e) When an overfill alarm is activated, the system shall indicate and record an overfill condition.
(Amended 1993)

S.3.3. Overfill Sensor.

(a) The weigh hopper shall be equipped with an overfill sensor which will cause the feed gate to close, activate an alarm, and inhibit weighing until the overfill condition has been corrected.
(Part (a) Added 1993) (Amended 1997)

(b) If the system is equipped with a lower garner or surge bin, that garner shall also be equipped with an overfill sensor which will cause the gate of the weigh hopper to remain open, activate an alarm, and inhibit weighing until the overfill condition has been corrected.
[Nonretroactive as of January 1, 1998]
(Part (b) Amended 1997)

S.4. Design of Weighing Elements.

S.4.1. Antifriction Means. - At all points at which a live part of the mechanism may come into contact with another part in the course of normal usage, frictional effects shall be reduced to a minimum by means of suitable antifriction means, opposing surfaces and points being properly shaped, finished, and hardened.

S.4.2. Adjustable Components. - An adjustable component, such as a potentiometer, shall be held securely in adjustment and, except for a component for adjusting level or a no-load reference value, shall not be adjustable from the outside of the device.

S.4.3. Multiple Load-Receiving Elements. - A system with a single indicating or recording element, or a combination indicating recording element, that is coupled to two or more load-receiving elements with independent weighing systems, shall be provided with means to prohibit the activation of any load-receiving element (or elements) not in use, and shall be provided with automatic means to indicate clearly and definitely which load-receiving element (or elements) is in use.

S.4.4. Venting. - All weighing systems shall be vented so that any internal or external pressure will not affect the accuracy or operation of the system.

S.5. Marking Requirements. (See also G-S.1.)

S.5.1. Capacity and Value of the Scale Division. - The capacity of the weighing system and the value of the scale division shall be clearly and conspicuously marked on the indicating element near the weight value indications.

S.5.2. Weighing Elements. - On a weighing element not permanently attached to an indicating element, there shall be clearly and permanently marked for the purposes of identification, the name, initials, or trademark of the manufacturer, the manufacturer's designation that positively identifies the pattern or design, and the nominal capacity.

S.5.3. Temperature Limits. - *Unless the temperature range is -10 °C to +40 °C (14 °F to 104 °F), the temperature range shall be marked on the device.*
[Nonretroactive as of January 1, 1986.]
(Added 1985)

S.5.4. Accuracy Class.

(a) All systems used to weigh grain shall be marked Class III.*

(b) All other systems shall be marked either Class III or III L.*

*(*See Section 2.20. Scales Code for the parameters for these accuracy classes for scales. The specific requirements for automatic bulk weighing systems apply to these devices when there is a conflict between the Scales Code and the Automatic Bulk Weighing Systems Code.)*
[Nonretroactive as of January 1, 1986.]
(Added 1985; Amended 1992)

N. Notes

N.1. Testing Procedures.

N.1.1. Test Weights. - The increasing load test shall be conducted using test weights equal to at least 10 percent of the capacity of the system:

(a) on automatic grain bulk-weighing systems installed after January 1, 1984, and

(b) on other automatic bulk-weighing systems installed after January 1, 1986.
(Amended 1987)

N.1.2. Increasing-Load Test. - An increasing-load test consisting of substitution and strain-load tests shall be conducted up to the used capacity of the weighing system.
(Amended 1987)

N.1.3. Decreasing-Load Test. - A decreasing-load test shall be conducted on devices used to weigh out.
(Added 1986)

N.1.4. Zero-Balance or No-Load Reference Value Change Test. - A test for change of zero-balance or no-load reference value shall be conducted on all scales after the removal of any test load. The change shall not be more than the minimum tolerance applicable.

N.1.5. Discrimination Test. *- A discrimination test shall be conducted on all automatic indicating scales with the weighing device in equilibrium at zero-load and at maximum test load, and under controlled conditions in which environmental factors are reduced to the extent that they will not affect the results obtained.*
[Nonretroactive as of January 1, 1986.]

N.1.5.1. Digital Device. - On a digital device, this test is conducted from just below the lower edge of the zone of uncertainty for increasing-load tests, or from just above the upper edge of the zone of uncertainty for decreasing-load tests.
(Added 1987)

N.2. Verification (Testing) Standards. - Standard weights and masses used in verifying weighing devices shall comply with requirements of NIST Handbook 105-1 (Class F) or the tolerances expressed in Appendix A, Fundamental Considerations, paragraph 3.2. (i.e., one-third of the smallest tolerance applied).

T. Tolerances

T.1. Tolerance Application. - Tolerance values shall be applied to all indications and recorded representations of a weighing system.

T.1.1. To Errors of Underregistration and Overregistration. - The tolerances hereinafter prescribed shall be applied equally to errors of underregistration and errors of overregistration.

T.1.2. To Increasing-Load Tests. - Basic tolerances shall be applied.

T.1.3. To Decreasing-Load Tests. - Basic tolerances shall be applied to systems used to weigh out.
(Added 1986)

T.1.4. To Tests Involving Digital Indications or Representations. - To the tolerances that would otherwise be applied, there shall be added an amount equal to one-half the value of the scale division. This does not apply to digital indications or recorded representations that have been corrected for rounding using error weights.
(Added 1986)

T.2. Minimum Tolerance Values. - The minimum tolerance value shall not be less than half the value of the scale division.

T.2.1. For Systems Used to Weigh Construction Materials. - The minimum maintenance and acceptance tolerance shall be 0.1 percent of the weighing capacity of the system, or the value of the scale division, whichever is less.
(Added 1986)

T.3. Basic Tolerance Values.

T.3.1. Acceptance Tolerance. - The basic acceptance tolerance shall be one-half the basic maintenance tolerance.

T.3.2. For Systems Used to Weigh Grain. - The basic maintenance tolerance shall be 0.1 percent of test load.

T.3.3. For all Other Systems. - The basic maintenance tolerance shall be 0.2 percent of test load.
(Amended 1986)

T.4. Time Dependence. *- At constant test conditions, the indication 20 seconds after the application of a load and the indication after 1 hour shall not differ by more than the absolute value of the applicable tolerance for the applied load. [Nonretroactive and enforceable as of January 1, 1987.]*
(Added 1986)

T.5. Repeatability. - The results obtained by several weighings of the same load under reasonably static test conditions shall agree within the absolute value of the maintenance tolerance for that load, and shall be within applicable tolerances.
(Added 1986)

T.6. Discrimination, Digital Automatic Indicating Scales. - A test load equivalent to 1.4d shall cause a change in the indicated or recorded value of at least 2.0d. This requires the zone of uncertainty to be not greater than 0.3 times the value of the scale division.
(Added 1985)

T.7. Influence Factors. *- The following factors are applicable to tests conducted under controlled conditions only, provided that:*

(a) types of devices approved prior to January 1, 1986, and manufactured prior to January 1, 1988, need not meet the requirements of this section; and

(b) new types of devices submitted for approval after January 1, 1986, shall comply with the requirements of this section; and

(c) all devices manufactured after January 1, 1988, shall comply with the requirements of this section.
[Nonretroactive as of January 1, 1986.]

T.7.1. Temperature. *- Devices shall satisfy the tolerance requirements under the following temperature conditions:*

T.7.1.1. *If not marked on the device, the temperature limits shall be:*

-10 °C to 40 °C (14 °F to 104 °F)

T.7.1.2. *If temperature limits are specified for the device, the range shall be at least 30 °C (54 °F).*

T.7.1.3. Temperature Effect on Zero-Load Balance. The zero-load indicator shall not vary by more than 1 division per 5 °C (9 °F) change in temperature.

T.7.1.4. Operating Temperature. - An indicating or recording element shall not display or record any usable values until the operating temperature necessary for accurate weighing and a stable zero-balance condition has been attained.
[Nonretroactive as of January 1, 1986.]

T.7.2. Barometric Pressure. *- The zero indication shall not vary by more than one scale division for a change in barometric pressure of 1 kPa over the total barometric range of 95 to 105 kPa (28 to 31 in of mercury).*
[Nonretroactive January 1, 1986.]

T.7.3. Electric Power Supply.

T.7.3.1. Power Supply, Voltage and Frequency

(a) Weighing devices that operate using alternating current must perform within the conditions defined in paragraphs T.2. through T.7. inclusive over the line voltage range of 100 to 130 V or 200 to 250 V rms as appropriate and over the frequency range of 59.5 to 60.5 Hz.

(b) Battery-operated instruments shall not indicate nor record values outside the applicable tolerance limits when battery power output is excessive or deficient.

T.7.3.2. Power Interruption. - A power interruption shall not cause an indicating or recording element to display or record any values outside the applicable tolerance limits.
[Nonretroactive as of January 1, 1986.]
(Added 1985)

UR. User Requirements

UR.1. Selection Requirements.

UR.1.1. For Systems Used to Weigh Grain. *- The number of scale divisions of a weighing system shall not be less than 2 000 nor greater than 10 000 divisions.*
[Nonretroactive as of January 1, 1984.]
(Amended 1986 and 1992)

U.R.1.2. For Systems Used to Weigh Commodities Other Than Grain. *- The number of scale divisions shall not be less than 500 nor greater than 10 000.*
[Nonretroactive as of January 1, 1987.]
(Added 1986)

UR.2. Installation Requirements.

UR.2.1. Protection From Environmental Factors. - The indicating elements, the lever system or load cells, the load-receiving element, and any permanently installed test weights shall be adequately protected from environmental factors such as wind, weather, and RFI that may adversely affect the operation or performance of the system.

UR.2.2. Foundation, Supports, and Clearance. - The foundation and supports of any system shall be such as to provide strength, rigidity, and permanence of all components, and clearance shall be provided around all live parts so that no contact can result before or during operation of the system.

UR.3. Loading Requirements.

UR.3.1. For Systems Used to Weigh Grain. - A system shall not be used to weigh drafts less than 40 percent of the weighing capacity of the system except for a final partial draft. Loads shall not normally be retained on the weighing element for a period longer than a normal weighing cycle.
(Amended 1986)

UR.3.2. For Systems Used to Weigh Commodities Other Than Grain. *- A system shall not be used to weigh drafts less than 20 percent of the weighing capacity of the system except for a final partial draft. Loads shall not normally be retained on the weighing element for a period longer than a normal weighing cycle.*
[Nonretroactive as of January 1, 1987.]
(Added 1986)

UR.4. System Modification. - The weighing system shall not be modified except when the modification has been approved by a competent engineering authority, preferably that of the engineering department of the manufacturer of the scale, and the official with statutory authority having jurisdiction over the scale.
(Amended 1991)

[THIS PAGE LEFT INTENTIONALLY BLANK]

Sec. 2.23. Weights

A. Application

A.1. This code applies to commercial weights; that is, weights used in connection with commercial weighing devices.

A.2. This code does not apply to test weights or to other "standards" of mass.

A.3. See also General Code requirements.

S. Specifications

S.1. Material. - The material used for weights shall be as follows:

(a) Weights of 6 g or 100 grains and larger shall be made of a metal, or a metal alloy, not softer than brass.

(b) Weights of less than 6 g or 100 grains may be made of aluminum, but shall not be made of iron or of unplated steel, except stainless steel.

S.2. Design.

S.2.1. Surface. - The surface of a weight shall be smooth and shall not be coated with thick, soft, or brittle material. A weight of more than 2 g or 30 grains or shall not have sharp edges, points, or corners.

S.2.2. Ring. - A ring on a weight shall not be split or removable.

S.3. Adjusting Material. - Adjusting material shall be securely positioned and shall not project beyond the surface of the weight.

S.4. Marking Requirements.

S.4.1. General. - A weight shall be marked to show clearly its nominal value, which shall include identification of the unit; however, the nominal value of a weight of 30 grains or 2 g, or less, may be designated by dots, lines, figures, distinctive shape, or other appropriate means.

S.4.2. Apothecaries' Weights. - On apothecaries' dram, ounce, and pound weights, the letters "ap" shall be used in combination with the nominal value and the appropriate abbreviation of or symbol for the unit.

S.4.3. Troy Weights. - On troy ounce and pound weights, the letter "t" shall be used in combination with the nominal value and the appropriate symbol of the unit.

S.4.4. Metric Weights. - On metric weights, the symbols "kg," "g," and "mg" shall be used in combination with the nominal value of kilograms, grams, and milligrams, respectively.

S.4.5. Carat Weights. - On carat weights, the letter "c" shall be used in combination with the nominal value.

S.4.6. Counterpoise Weight. - A counterpoise weight shall be marked to show clearly both its nominal value and the value it represents when used on the multiplying-lever scale for which it is intended.

N. Notes

N.1. Testing Procedures. - Commercial weights should be tested on a precision balance using standard weights, the errors of which, when used without correction, do not exceed 1/3 of the smallest tolerance to be applied. (See Appendix A, Fundamental Considerations paragraphs 3.2. and 3.3.)

T. Tolerances

T.1. In Excess and in Deficiency. - The tolerances hereinafter prescribed shall be applied equally to errors in excess and errors in deficiency.

T.2. On Avoirdupois Weights. - The maintenance tolerances shall be as shown in Table 1. Acceptance tolerances shall be one-half the maintenance tolerances.

T.3. On Metric Weights. - The maintenance tolerances shall be as shown in Table 2. Acceptance tolerances shall be one-half the maintenance tolerances.

T.4. On Carat Weights. - The maintenance tolerances shall be as shown in Table 2. Acceptance tolerances shall be one-half the maintenance tolerances.

T.5. On Apothecaries' and Troy Weights. - The maintenance tolerances shall be as shown in Table 3. Acceptance tolerances shall be one-half the maintenance tolerances.

Table 1.
Maintenance Tolerance for Avoirdupois Weights

Maintenance Tolerance						
Nominal Value	Equal-Arm Weights		Counterpoise Weights			
			For scales with multiples of less than 1 000		For scales with multiples of 1 000 or over	
oz	grains	mg	grains	mg	grains	mg
1/64	0.1	6				
1/32	0.3	19				
1/16	0.4	26				
1/8	0.5	32				
1/4	1.0	65				
1/2	1.5	97	1.0	65		
1	1.7	110	1.0	65		
2	2.0	130	1.0	65		
3	2.0	130	1.5	97		
4	3.0	190	1.5	97	1.0	65
5	3.5	230	1.5	97	1.0	65
6	3.5	230	1.5	97		
8	4.0	260	2.0	130	1.5	97
10	4.0	260	2.5	160	2.0	130
12	5.0	320	2.5	160	2.0	130
lb	grains	mg	grains	mg	grains	mg
1	5.0	320	3.0	190	2.5	160
2	7.0	450	6.0	390	4.0	260
3	9.0	580	9.0	580	5.0	320
4	11.0	710	11.0	710	6.0	390
5	15	970	12.0	780	6.5	420
6	17	1 190				
7	19	1 200				
8	21	1 400	15.0	970	9.0	580
9	23	1 500				
10	25	1 600	18.0	1160	10.0	650
15	28	1 800				
20	30	1 900				
25	35	2 300				
30	40	2 600				
40	45	2 900				
50	50	3 200				

Table 2.
Maintenance Tolerances for Metric Weights

Nominal Value (mg)	Maintenance Tolerance (mg)	Nominal Value (g)	Maintenance Tolerance (mg)
5 or less	0.1	1	4
10	0.3	2	6
20	0.4	3	8
30	0.6	5	10
50	0.8	10	15
100	1.0	20	20
200	1.5	30	30
300	2.0	50	40
500	3.0	100	70
		200	100
		300	150
		500	175
Nominal Value (kg)	**Maintenance Tolerance (mg)**	**Nominal Value (carats)**	**Maintenance Tolerance (mg)**
1	250	0.25*	0.6
2	400	0.5**	1.0
3	500	1.0	1.5
5	800	2.0	2.0
10	1 000	3.0	3.0
20	1 500	5.0	4.0
		10.0	6.0
		20.0	10.0
		30.0	12.0
		50.0	15.0
		100.0	25.0
		*25 points or less **50 points	

Table 3.
Maintenance Tolerances
For Apothecaries' and Troy Weights

Nominal Value	Maintenance Tolerance		Nominal Value	Maintenance Tolerance	
grains	grains	mg	oz	grains	mg
1	0.01	0.6	1	0.4	25.0
2	0.02	1.3	2	0.6	40.0
3	0.03	2.0	3	1.0	65.0
5	0.03	2.0	4	1.5	100.0
10	0.04	2.5	5	1.6	105.0
20	0.06	4.0			
scruples	grains	mg	oz	grains	mg
1	0.06	4.0	6	1.8	115.0
2	0.10	6.5	7	1.9	125.0
			8	2.0	130.0
			9	2.1	135.0
			10	2.2	145.0
dr	grains	mg	oz	grains	mg
0.5	0.07	4.5	11	2.4	155.0
1.0	0.10	6.5	12	2.5	160.0
2.0	0.20	13.0	20	2.9	190.0
3.0	0.30	20.0	30	3.7	240.0
4.0	0.40	25.0	50	5.4	350.0
5.0	0.50	30.0			
6.0	0.60	40.0			
dwt	grains	mg	oz	grains	mg
1	0.06	4.0	100	7.7	500.0
2	0.10	6.5	200	12.3	800.0
3	0.15	10.0	300	15.4	1 000.0
4	0.20	13.0	500	23.1	1 500.0
5	0.30	20.0	1 000	38.6	2 500.0
10	0.40	25.0			

Section 2.24. Automatic Weighing Systems

The status of Sectios 2.24. Automatic Weighing Systems was changed from "tentative" to "permanent" effective January 1, 2005.

The National Type Evaluation Program (NTEP) has been evaluating devices under the provisions of this code since it was added to Handbook 44 in 1995. In addition, a number of weights and measures jurisdictions as well as organizations such as the U.S. Department of Agriculture (USDA) have implemented this code using the provisions of General Code Paragraph G-A.3. – Special and Unclassified Equipment. It is recommended that the jurisdictions that have not implemented this code work with industry to expedite the implementation of its use.

A. Application

A.1. This code applies to devices used to automatically weigh pre-assembled discrete loads or single loads or loose materials in applications where automatic weighing systems[1] are used or employed in the determination of quantities, things, produce, or articles for distribution, for purchase, offered or submitted for sale, for distribution, purchase, or in computing any basic charge or payment for services rendered on the basis of weight, and in packaging plants subject to regulation by the USDA. Some weigh-labelers and checkweighers may also include a scale that is incorporated in a conveyor system that weighs packages in a static or non-automatic weighing mode.[2]

This includes:

(a) Automatic weigh-labelers,

(b) Combination automatic and non-automatic weigh-labelers,

(c) Automatic checkweighers

(d) Combination automatic and non-automatic check-weighers, and

(e) Automatic gravimetric filling machines that weigh discrete loads or single loads of loose materials and determine package and production lot compliance with net content representations.

(Amended 2001, 2004 and 2005)

A.2. This code does not apply to:

(a) Belt-Conveyor Scale Systems,

(b) Railway Track Scales,

(c) Monorail Scales,

(d) Automatic Bulk-Weighing Systems, or

(e) Devices that measure quantity on a time basis,

(f) Controllers or other auxiliary devices except as they may affect the weighing performance,

(g) Automatic gravimetric filling machines and other automatic weighing systems employed in determining the weight of a commodity in a plant or business with a separate quantity control program (e.g., a system of statistical process control) using suitable weighing instruments and measurement standards traceable to national standards to determine production lot compliance with net content representations.[3]
(Added 2004)

(Amended 2001 and 2004)

A.3. Also see General Code requirements.

[1] An automatic weighing system does not require the intervention of an operator during the weighing process. The necessity to give instructions to start a process or to release a load, or the function of the instrument (static, dynamic, setup, etc.) are not relevant in deciding the catetory of automatic or non-automatic instruments.
(Added 2004)

[2] Prepackaging scales (and other commercial devices) used for putting up packages in advance of sale are acceptable for use in commerce if all appropriate provisions of Handbook 44 are met. Users of such devices must be alert to the legal requirements relating to the declaration of quantity on a package. Such requirements are to the effect that, on the average, the contents of the individual packages of a particular commodity comprising a lot, shipment, or delivery must contain at least the quantity declared on the label. The fact that a scale or other commercial device may overregister, but within established tolerances, and is approved for commercial service is not a legal justification for packages to contain, on the average, less than the labeled quantity.
(Added 2004)

[3] See NIST Handbook 130, Uniform Laws and Regulations in the area of Legal Metrology and Engine Fuel Qualtity, Interpretations and Guidelines paragraph 2.6.11. Good Quantity Control Practices.

S. Specifications

S.1. Design of Indicating and Recording Elements and of Recorded Representations.

S.1.1. Zero Indication.

(a) A weigh-labeler shall be equipped with an indicating or recording element. Additionally, a weigh-labeler equipped with an indicating or recording element shall either indicate or record a zero-balance condition and an out-of-balance condition on both sides of zero. (Amended 2004)

(b) An automatic checkweigher may be equipped with an indicating or recording element.

(c) A zero-balance condition may be indicated by other than a continuous digital zero indication, provided that effective automatic means is provided to inhibit a weighing operation or to return to a continuous digital indication when the device is in an out-of-balance condition.

S.1.1.1. Digital Indicating Elements.

(a) A digital zero indication shall represent a balance condition that is within ± 1/2 scale division.

(b) A digital indicating device shall either automatically maintain a "center of zero" condition to ± 1/4 scale division or less, or have an auxiliary or supplemental "center-of-zero" indicator that defines a zero-balance condition to ± 1/4 scale division or less.

(c) Verification of the accuracy of the center of zero indication to ± 1/4 scale division or less during automatic operation is not required on automatic checkweighers. (Amended 2004)

S.1.2. Value of Division Units. The value of a division "d" expressed in a unit of weight shall be equal to:

(a) 1, 2, or 5; or

(b) a decimal multiple or submultiple of 1, 2, or 5;

S.1.2.1. Weight Units. Except for postal scales, indicating and recording elements for shipping and postal applications, and scales used to print standard pack labels, a device shall indicate weight values using only a single unit of measure. (Amended 2004)

S.1.3. Provision for Sealing.

(a) **Automatic Weighing Systems, Except Automatic Checkweighers.** A device shall be designed with provision(s) as specified in Table S.1.3. "Categories of Device and Methods of Sealing," for applying a security seal that must be broken, or for using other approved means of providing security (e.g., data change audit trail available at the time of inspection), before any change that detrimentally affects the metrological integrity of the device can be made to any electronic mechanism.

Table S.1.3.
Categories of Device and Methods of Sealing

Categories of Device	Method of Sealing
Category 1: No remote configuration capability.	Seal by physical seal or two event counters: one for calibration parameters and one for configuration parameters.
Category 2: Remote configuration capability, but access is controlled by physical hardware. The device shall clearly indicate that it is in the remote configuration mode and record such message if capable of printing in this mode.	The hardware enabling access for remote communication must be at the device and sealed using a physical seal or two event counters: one for calibration parameters and one for configuration parameters.
Category 3: Remote configuration capability access may be unlimited or controlled through a software switch (e.g., password).	An event logger is required in the device; it must include an event counter (000 to 999), the parameter ID, the date and time of the change, and the new value of the parameter. A printed copy of the information must be available through the device or through another on-site device. The event logger shall have a capacity to retain records equal to ten times the number of sealable parameters in the device, but not more than 1000 records are required. (Note: Does not require 1000 changes to be stored for each parameter.)

(b) **For Automatic Checkweighers.** Security seals are not required in applications where it would prohibit an authorized user from having access to the calibration functions of a device.
(Amended 2004)

S.1.4. Automatic Calibration. A device may be fitted with an automatic or a semi-automatic calibration mechanism. This mechanism shall be incorporated inside the device. After sealing, neither the mechanism nor the calibration process shall facilitate fraud.

S.1.5. Adjustable Components. Adjustable components shall be held securely in adjustment and, except for a zero-load balance mechanism, shall be located within the housing of the element.
(Amended 2004)

S.2. Design of Zero and Tare Mechanisms.

S.2.1. Zero Load Adjustment.

S.2.1.1. Automatic Zero-Tracking Mechanism. Except for automatic checkweighers, under normal operating conditions the maximum load that can be "rezeroed," when either placed on or removed from the platform all at once, shall be 1.0 scale division.
(Amended 2004)

S.2.1.2. Initial Zero-Setting Mechanism. Except for automatic checkweighers, an initial zero-setting mechanism shall not zero a load in excess of 20% of the maximum capacity of the automatic weighing system unless tests show that the scale meets all applicable tolerances for any amount of initial load compensated by this device within the specified range.

S.2.2. Tare. On any automatic weighing system, the value of the tare division shall be equal to the value of the division. The tare mechanism shall operate only in a backward direction (i.e., in a direction of under-registration) with respect to the zero-load balance condition of the automatic weighing system. A device designed to automatically clear any tare value shall also be designed to prevent the automatic clearing of tare until a complete transaction has been indicated.

Note: On a computing automatic weighing system, this requires the input of a unit price, the display of the unit price, and a computed positive total price at a readable equilibrium. Other devices require that a transaction or lot run be completed.
(Amended 2004)

S.3. Verification Scale Interval.

S.3.1. Multiple Range and Multi-Interval Automatic Weighing System. The value of "e" shall be equal to the value of "d."

S.3.2. Load Cell Verification Interval Value. The relationship of the value for the load cell verification scale interval, v_{min}, to the scale division, d, for a specific scale installation shall be:

$$v_{min} \leq \frac{d}{\sqrt{N}}$$

where N is the number of load cells in the scale.

Note: When the value of the scale division, d, differs from the verification scale division, e, for the scale, the value of e must be used in the formula above.

S.3.3. For automatic checkweighers, the value of "e" shall be specified by the manufacturer and may be larger than "d," but in no case can "e" be more than 10 times the value of "d."

S.4. Weight Indicators, Weight Displays, Reports, and Labels.

S.4.1. Additional Digits in Displays. Auxiliary digital displays that provide additional digits for use during performance evaluation may be included on automatic checkweighers. However, in cases where these indications are not valid for determining the actual weight of a package (e.g., only appropriate for use in statistical process control programs by users) they shall be clearly and distinctly differentiated from valid weight displays by indicating them to the user.
(Amended 2004)

For example, the additional digits may be differentiated by color, partially covered by placing crosshatch overlays on the display, or made visible only after the operator presses a button or turns a key to set the device in a mode which enables the additional digits.

S.4.2. Damping. An indicating element equipped with other than automatic recording elements shall be equipped with effective means to permit the recording of weight values only when the indication is stable within plus or minus one scale division. The values recorded shall be within applicable tolerances.
(Amended 2004)

S.4.3. Over Capacity Indication. An indicating or recording element shall not display nor record any values when the scale capacity is exceeded by nine scale divisions.
(Amended 2004)

S.4.4. Label Printer. A device that produces a printed ticket to be used as the label for a package shall print all values digitally and of such size, style of type, and color as to be clear and conspicuous on the label.
(Amended 2004)

S.4.4.1. Label Printing. If an automatic check-weigher prints a label containing weight information that will be used in a commercial transaction, it must conform to all of the requirements specified for weigh-labelers so that the printed ticket meets appropriate requirements.
(Amended 2004)

S.5. Accuracy Class.

S.5.1. Marking. Weigh-labelers and automatic check-weighers shall be Class III devices and shall be marked accordingly, except that a weigh-labeler marked Class IIIS may be used in package shipping applications.
(Amended 1997)

S.6. Parameters for Accuracy Classes. The number of divisions for device capacity is designated by the manufacturer and shall comply with parameters shown in Table S.6.

S.7. Marking Requirements. [See also G-S.1., G-S.4., G-S.6., G-S.7., G-U.2.1.1., and UR.3.3.]

S.7.1. Location of Marking Information. Automatic weighing systems which are not permanently attached to an indicating element, and for which the load-receiving element is the only part of the weighing/load-receiving element visible after installation, may have the marking information required in G-S.1. of the General Code and Table S.7.a. and S.7.b. of the Automatic Weighing System Code located in an area that is accessible only through the use of a tool; provided that the information is easily accessible (e.g., the information may appear on the junction box under an access plate). The identification information for these automatic weighing systems shall be located on the weighbridge (load-receiving element) near the point where the signal leaves the weighing element or beneath the nearest access cover.

S.7.2. Marking Required on Components of Automatic Weighing Systems. The following components of automatic weighing systems shall be marked as specified in Tables S.7.a. and S.7.b.:

(a) Main elements and components when not contained in a single enclosure for the entire automatic weighing system;

(b) Load cells for which Certificates of Conformance (CC) have been issued under the National Type Evaluation Program; and

(c) Other equipment necessary to a weighing system, but having no metrological effect on the weighing system.

(Amended 2004)

Table S-6. Parameters for Accuracy Classes

		Number of divisions (n)	
Class	Value of the verification division (e)	Minimum	Maximum
SI Units			
III	0.1 to 2 g inclusive	100	10 000
	equal to or greater than 5 g	500	10 000
INCH-POUND Units			
III	0.0002 lb to 0.005 lb, inclusive	100	10 000
	0.005 oz to 0.125 oz, inclusive	100	10 000
	equal to or greater than 0.01 lb	500	10 000
	equal to or greater than 0.25 oz	500	10 000
IIIS	greater than 0.01 lb	100	1000
	greater than 0.25 oz	100	1000
For Class III devices, the value of “e” is specified by the manufacturer as marked on the device; “d” shall not be smaller than 0.1 “e.” “e” shall be differentiated from “d” by size, shape, or color.			

(Amended 1997 and 2004)

Table S.7.a. Marking Requirements					
Weighing Equipment To Be Marked With	Weighing, load-receiving, and indicating element in same housing	Indicating element not permanently attached to weighing and load-receiving element	Weighing and load-receiving element not permanently attached to indicating element	Load cell with CC (11)	Other equipment or device (10)
Manufacturer's ID (1)	X	X	X	X	
Model Designation (1)	X	X	X	X	
Serial Number and Prefix (2)	X	X	X	X	
Certificate of Conformance Number (16)	X	X	X	X	X(16)
Accuracy Class (14)	X	X(8)	X	X	X
Nominal Capacity (3)(15)	X	X	X		X
Value of Division, d (3)	X	X			X(13)
Value of “e” (4)	X	X			
Temperature Limits (5)	X	X	X	X	
Special Application (11)	X	X	X		
Maximum Number of Scale Divisions n_{max} (6)		X(8)	X	X	
Minimum Verification Division (e_{min})			X		
“S” or “M” (7)				X	
Direction of Loading (12)				X	
Minimum Dead Load				X	
Maximum Capacity (Max)	X			X	
Minimum Capacity (Min)	X				
Safe Load Limit				X	
Load Cell Verification Interval (v_{min})				X	
Maximum Belt Speed (m/sec or m/min)	X		X		

Note: See Table S.7.b. for applicable notes.
(Amended 1999 and 2002)

Table S.7.b.
Notes for Table S.7.a.

1. Manufacturer's identification and model designation. (See G-S.1.)

2. Serial number and prefix. (See G-S.1.)

3. The nominal capacity and value of the automatic weighing system division shall be shown together (e.g., 50 000 x 5 kg, or 30 x 0.01 lb) adjacent to the weight display when the nominal capacity and value of the automatic weighing system division are not immediately apparent. Each division value or weight unit shall be marked on variable-division value or division-unit automatic weighing systems.

4. Required only if different from "d."

5. Required only on automatic weighing systems if the temperature range on the NTEP CC is narrower than and within -10 °C to 40 °C (14 °F to 104 F). (Amended 2007)

6. This value may be stated on load cells in units of 1000 (e.g., n: 10 is 10 000 divisions).

7. Denotes compliance for single or multiple load cell applications.

8. An indicating element not permanently attached to a weighing element shall be clearly and permanently marked with the accuracy Class III, and the maximum number of divisions, n_{max}.

9. Necessary to the weighing system but having no metrological effect, e.g., auxiliary remote display, keyboard, etc.

10. The markings may be either on the load cell or in an accompanying document; except that, if an accompanying document is provided, the serial number shall appear both on the load cell and in the document. The manufacturer's name or trademark, the model designation, and identifying symbol for the serial number shall also be marked both on the load cell and in any accompanying document.

11. An automatic weighing system designed for a special application rather than general use shall be conspicuously marked with suitable words visible to the operator and customer restricting its use to that application.

12. Required if the direction of loading the load cell is not obvious.

13. Serial number and prefix (See G-S.1) modules without "intelligence" on a modular system (e.g., printer, keyboard module, cash drawer, and secondary display in a point-of-sale system) are not required to have serial numbers.

14. The accuracy Class of a device shall be marked on the device with the appropriate designation.

15. The nominal capacity shall be conspicuously marked on any automatic-indicating or recording automatic weighing system so constructed that the capacity of the indicating or recording element, or elements, is not immediately apparent.

16. Required only if a CC has been issued for the equipment.

N. Notes

N.1. Test Requirements for Automatic Weighing Systems.

N.1.1. Test Pucks and Packages.

(a) Test pucks and packages shall be:

(1) representative of the type, size, and weight ranges to be weighed on a device, and

(2) stable while in motion, hence the length and width of a puck or package should be greater than its height.

(b) For type evaluation the manufacturer shall supply the test pucks or packages for each range of test loads.
(Amended 1997 and 2006)

N.1.2. Accuracy of Test Pucks or Packages. The error in any test puck or package shall not exceed one-fourth (1/4) of the acceptance tolerance. If packages are used to conduct field tests on automatic weighing systems, the package weights shall be determined on a reference scale or balance with an inaccuracy that does not exceed one-fifth (1/5) of the smallest tolerance that can be applied to the device under test.

N.1.3. Verification (Testing) Standards. Field standard weights shall comply with requirements of NIST Handbook 105-1 (Class F) or the tolerances expressed in Fundamental Considerations, paragraph 3.2. (i.e., one-third of the smallest tolerance applied).
(Amended 2004)

N.1.4. Radio Frequency Interference (RFI) and Other Electromagnetic Interference Susceptibility, Field Evaluation. An RFI test shall be conducted at a given installation when the presence of RFI has been verified and characterized if those conditions are considered "usual and customary".
(Added 2004)

N.1.5. Tests Loads. A performance test shall consist of four separate test runs conducted at different test loads according to Table N.1.5.l
(Amended 2004)

Table N.1.5. Test Loads
At or near minimum capacity
At or near maximum capacity
At two (2) critical points between minimum and maximum capacity
Test may be conducted at other loads if the device is intended for use at other specific capacities

(Amended 2004)

N.1.6. Influence Factor Testing. Influence factor testing shall be conducted statically.
(Amended 2004).

N.2. Test Procedures – Weigh-Labelers. If the device is designed for use in a non-automatic weighing mode, it shall be tested in the non-automatic mode according to Handbook 44 Section 2.20 Scales Code..

Note: If the device is designed for only automatic weighing, it shall only be tested in the automatic weighing mode.
(Amended 2004)

N.2.1. Non-Automatic Tests.

N.2.1.1. Increasing-Load Test. The increasing-load test shall be conducted with the test loads approximately centered on the load-receiving element of the scale.

N.2.1.2. Decreasing-Load Test. The decreasing-load test shall be conducted with the test loads approximately centered on the load-receiving element of the scale.

N.2.1.3. Shift Test. To determine the effect of off-center loading, a test load equal to one-half (1/2) maximum capacity shall be placed in the center of each of the four points equidistant between the center and front, left, back and right edges of the load receiver.

N.2.1.4. Discrimination Test. A discrimination test shall be conducted with the weighing device in equilibrium at zero load and at maximum test load, and under controlled conditions in which environmental factors are reduced to the extent that they will not affect the results obtained. This test is conducted from just below the lower edge of the zone of uncertainty for increasing load tests, or from just above the upper edge of the zone of uncertainty for decreasing-load tests.

N.2.1.5. Zero-Load Balance Change. A zero-load balance change test shall be conducted on all automatic weighing systems after the removal of any test load. The zero-load balance should not change by more than the minimum tolerance applicable. (Also see G-UR.4.2.)
(Amended 2004)

N.2.2. Automatic Test Procedures.

N.2.2.1. Tests Non-Automatic. If the automatic weighing system is designed to operate non-automatically, and is used in that manner, during normal use operation, it shall be tested non-automatically using mass standards. The device shall not be tested non-automatically if it is used only in the automatic mode.

N.2.2.2. Automatic Tests. The device shall be tested at the normal operating speed using packages. Test runs should be conducted using at least two test loads distributed over its normal weighing range (e.g., near the lowest and highest ranges in which the device is typically operated). Each test load should be run a minimum of 10 consecutive times.
(Amended 2004)

N.3. Test Procedures - Automatic Checkweigher.

N.3.1. Tests Non-Automatic. If the scale is designed to operate non-automatically during normal user operation, it shall be tested non-automatically according to paragraphs N.2.1.1. Increasing Load Test thnrough N.2.1.5. Zero-Balance Change.

N.3.2. Automatic Tests. The device shall be tested at the highest speed in each weight range using standardized test pucks or packages. Test runs shall be conducted using two test loads. The number of consecutive test weighments shall be as specified in Table N.3.2.
(Amended 2004)

Table N.3.2. Number of Sample Weights Per Test for Automatic Checkweighers

Weighing Range m = mass of test load	Number of sample weights per test	
	Field	Type Evaluation
20 divisions $\leq$ m $\leq$ 10 kg 20 divisions $\leq$ m $\leq$ 22 lb	30	60
10 kg < m $\leq$ 25 kg 22 lb < m $\leq$ 55 lb	16	32
25 kg < m $\leq$ 100 kg 55 lb < m $\leq$ 220 lb	10	20
100 kg (220 lb) < m	10	10

(Amended 2004)

T. Tolerances

T.1. Principles.

T.1.1. Design. The tolerance for a weighing device is a performance requirement independent of the design principle used.

T.1.2. Scale Division. The tolerance for a weighing device is related to the value of the scale division (d) or the value of the verification scale division (e) and is generally expressed in terms of d or e. The random tolerance for automatic checkweighers is expressed in terms of Maximum Allowable Variance (MAV).

T.2. Tolerance Application.

T.2.1. General. The tolerance values are positive (+) and negative (-) with the weighing device adjusted to zero at no load. When tare is in use, the tolerance values are applied from the tare zero reference; the tolerance values apply to certified test loads only.

T.2.2. Type Evaluation Examinations. For type evaluation examinations, the tolerance values apply to increasing and decreasing load tests within the temperature, and power supply limits specified in T.7. Influence Factors.
(Amended 2004)

T.2.3. Subsequent Verification Examinations. For type evaluation examinations, the tolerance values apply regardless of the influence factors in effect at the time of the conduct of the examination. (Also see G-N.2., Testing with Nonassociated Equipment)
(Added 2007)

T.2.4. Multiple Range and Multi-Interval Automatic Weighing System. For multiple range and multi-interval devices, the tolerance values are based on the value of the scale division of the range in use.

T.3. Tolerance Values.

T.3.1. Tolerance Values - Class III Weigh-Labeler. (See T.3.2. for Class IIIS Weigh-Labelers.)

T.3.1.1. Non-Automatic Tests. Tolerance values shall be as specified in Table T.3., Class III - Tolerances in Divisions.
(Amended 2004)

T.3.1.2. Automatic Tests. Acceptance tolerance values shall be the same as maintenance tolerance values specified in Table T.3., Class III - Tolerances in Divisions.
(Amended 2004)

Table T.3. Class III – Tolerance in Divisions (e)

Test Load in Divisions	Tolerance in Divisions	
Class III	Acceptance	Maintenance
0 – 500	± 0.5	± 1
501 – 2000	± 1	± 2
2001 – 4000	± 1.5	± 3
4001+	± 2.5	± 5

(Amended 2004)

T.3.2. Tolerance Values - Class IIIS Weigh-Labelers in Package Shipping Applications.
(Added 1997)

T.3.2.1. Non-Automatic Tests. - Tolerance values shall be as specified in Table T.3.2.1. Non-Automatic Tolerances for Class IIIS Weigh-Labelers.
(Amended 2004)

Table T.3.2.1. Non-Automatic Tolerances for Class IIIS Weigh-Labelers

Test Load in Divisions	Tolerance in Divisions	
Class IIIS	Acceptance	Maintenance
0 – 50	± 0.5	± 1
51 – 200	± 1	± 2
201 – 1000	± 1.5	± 3

(Added 1997) (Amended 2004)

T.3.2.2. Automatic Tests. - Tolerance values specified in Table T.3.2.2. Automatic Tolerances for Class IIIS Weigh-Labelers shall be applied.
(Amended 2004 and 2006)

Table T.3.2.2. Automatic Tolerances for Class IIIS Weigh-Labelers

Test Load in Divisions	Tolerance in Divisions	
Class IIIS	Acceptance	Maintenance
0 - 50	± 1.5	± 2
51 - 200	± 2	± 3
201 - 1000	± 2.5	± 4

(Added 1997) (Amended 2004)

T.3.3. Tolerance Values - Automatic Checkweighers.

T.3.3.1. Laboratory Tests for Automatic Check-weighers.

T.3.3.1.1. Non-Automatic Tests. The acceptance tolerance values specified in Table T.3., Class III - Tolerance in Divisions, shall be applied.
(Amended 2004)

T.3.3.1.2. Automatic Tests.

(a) The systematic error for each test run shall be within the acceptance tolerances specified in Table T.3. Class III – Tolerance in Division (e) for the test loads as specified in Table N.1.5.
(Amended 2004, 2005 and 2006)

(b) The standard deviation of the results shall not exceed one-ninth (1/9) of the Maximum Allowable Variation (MAV) for specific package weights (which means that 3 standard deviations cannot exceed one-third (1/3) of the MAV value) as required in the latest edition of NIST Handbook 133. This value does not change regardless of whether acceptance or maintenance tolerances are being applied to the device under test.
(Amended 2004 and 2005)

(1) For U.S. Department of Agriculture (USDA) inspected meat and poultry products packaged at a plant subject to inspection by the USDA Food Safety and Inspection Service, use Handbook 133 Table 2-9, U.S. Department of Agriculture, Meat and Poultry, Groups and Lower Limits for Individual Packages, or

(2) For all other packages with a labeled net quantity in terms of weight use Handbook 133 Table 2-5, Maximum Allowable Variations for Packages Labeled by Weight.

(3) For all packages with a labeled net quantity in terms of liquid or dry volume use Handbook 133 Table 2-6, Maximum Allowable Variations for Packages Labeled by Liquid or Dry Volume.

(Amended 2004 and 2006)

T.3.3.2. Field Tests for Automatic Checkweighers.

T.3.3.2.1. Non-Automatic Test. - The tolerance values shall be as specified in Table T.3., Class III - Tolerance in Divisions.
(Amended 2004 and 2005)

T.3.3.2.2. Automatic Test.

(a) The systematic error requirement is not applied in a field test.

(b) The standard deviation of the test results shall not exceed one-ninth (1/9) of the Maximum Allowable Variation (MAV) for specific package weights (which means that 3 standard deviations cannot exceed one-third (1/3) of the MAV value) as required in the latest Edition of NIST Handbook 133. This value does not change regardless of whether acceptance or maintenance tolerances are being applied to the device under test.
(Amended 2004, 2005 and 2006)

(1) For U.S. Department of Agriculture (USDA) inspected meat and poultry products packaged at a plant subject to inspection by the USDA Food Safety and Inspection Service, use Handbook 133 Table 2-9, U.S. Department of Agriculture, Meat and Poultry, Groups and Lower Limits for Individual Packages, or

(2) For all other packages with a labeled net quantity in terms of weight use Handbook 133 Table 2-5, Maximum Allowable Variations for Packages Labeled by Weight.

(3) For all packages with a labeled net quantity in terms of liquid or dry volume use Handbook 133 Table 2-6. Maximum Allowable Variations for Packages Labeled by Liquid or Dry Volume.

(Amended 2004 and 2006)

T.4. Agreement of Indications. In the case of a weighing system equipped with more than one indicating element or indicating element and recording element combination, the difference in the weight value indications of any load shall not be greater than the absolute value of the applicable tolerance for that load, and shall be within tolerance limits.

T.5. Repeatability. The results obtained from several weighings of the same load under reasonably constast test conditions shall agree within the absolute value of the maintenance tolerance for that load, and shall be within applicable tolerances.
(Amended 2004)

T.6. Discrimination. A test load equivalent to 1.4 d shall cause a change in the indicated or recorded value of at least 2.0 d. This requires the zone of uncertainty to be not greater than 0.3 d (see N.2.1.4.).
(Amended 2004)

T.7. Influence Factors. The following factors are applicable to tests conducted under controlled conditions only.

T.7.1. Temperature. Devices shall satisfy the tolerance requirements under the following temperature conditions:

T.7.1.1. If not specified in the operating instructions or if not marked on the device, the temperature limits shall be: -10 °C to 40 °C (14 °F to 104 °F)

T.7.1.2. If temperature limits are specified for the device, the range shall be at least 30 °C (54 °F).

T.7.1.3. Temperature Effect on Zero-Load Balance. The zero-load indication shall not vary by more than one division per 5 °C (9 °F) change in temperature.

T.7.1.4. Operating Temperature. The indicating or recording element shall not display nor record any usable values until the operating temperature necessary for accurate weighing and a stable zero balance condition have been attained.

T.7.2. Electric Power Supply.

T.7.2.1. Range of Voltages.

(a) Automatic weighing systems that operate using alternating current must perform within the conditions defined in paragraphs T.3. through T.6., inclusive, when tested over the range of -15% to +10% of the marked nominal line voltage(s) at 60 Hz, or the voltage range marked by the manufacturer at 60 Hz.

(b) Automatic weighing systems that operate using DC current must perform within the conditions defined in paragraphs T.3. through T.6., inclusive, when tested over the range from minimum operating voltage[4] to +20% of the voltage marked on the instrument (nominal voltage).

(c) Battery-operated electronic automatic weighing systems with external or plug-in power supply (AC or DC) shall either continue to function correctly or not indicate any weight values if the voltage is below the manufacturer's specified value, the latter being larger than or equal to the minimum operating voltage.[4]

Note: This requirement applies only to metrologically significant voltage supplies.
(Amended 2001 and 2004)

T.7.2.2. Power Interruption. A power interruption shall not cause an indicating or recording element to display or record any values outside the applicable tolerance limits.
(Amended 2004)

T.8. Radio Frequency Interference (RFI) and Other Electromagnetic Interference Susceptibility. The difference between the weight indication with the disturbance and the weight indication without the disturbance (see also N.1.4.) shall not exceed one scale division (d) or the equipment shall:
(Amended 2004)

(a) blank the indication, or

(b) provide an error message, or

(c) the indication shall be so completely unstable that it could not be interpreted, or transmitted into memory or to a recording element, as a correct measurement value.

UR. User Requirements

UR.1. Selection Requirements. Equipment shall be suitable for the service in which it is used with respect to elements of its design, including but not limited to, its capacity, number of scale divisions, value of the scale division or verification scale division, minimum capacity, and computing capability.

UR.1.1. General. Automatic Weighing Systems shall be designated by the manufacturer for that service.

UR.1.2. Value of the Indicated and Recorded Scale Division. The value of the division as recorded shall be the same as the division value indicated.

UR.2. Installation Requirements.

UR.2.1. Protection From Environmental Factors. The indicating elements, the lever system or load cells, and the load-receiving element of a permanently installed scale, and the indicating elements of a scale not intended to be permanently installed, shall be adequately protected from environmental factors such as wind, weather, and RFI that may adversely affect the operation or performance of the device.

UR.2.2. Foundation, Supports, and Clearance. The foundation and supports of any scale installed in a fixed location shall be such as to provide strength, rigidity, and permanence of all components, and clearance shall be provided around all live parts to the extent that no contacts may result when the load-receiving element is empty, nor throughout the weighing range of the scale.

UR.2.3. Entry and Departure From Weighing Area. The belt or other conveyance that introduces the weighed load to the weighing zone and that carries the weighed load away from the weighing zone shall be maintained per the manufactures recommendations.

UR.3. Use Requirements.

UR.3.1. Minimum Load. The minimum load shall be as specified by the manufacturer, but not less than 20 divisions since the use of a device to weigh light loads is likely to result in relatively large errors.

UR.3.1.1. Minimum Load for Class IIIS Weigh-Labelers. The minimum load shall be as specified by the manufacturer, but not less than 10 divisions since the use of a device to weigh light loads is likely to result in relatively large errors.
(Added 1997)

[4] The minimum operating voltage is defined as the lowest possible operating voltage before the automatic weighing system no longer indicates nor records weight values.
(Added 2004)

UR.3.2. Maximum Load. An automatic weighing system shall not be used to weigh a load of more than its maximum capacity.
(Amended 2004)

UR.3.3. Special Designs. An automatic weighing system designed and marked for a special application shall not be used for other than its intended purpose.

UR.3.4. Use of Manual Gross Weight Entries. Manual entries are permitted only when a device or system is generating labels for standard weight packages.

UR.4. Maintenance Requirements.

UR.4.1. Balance Condition. If an automatic weighing system is equipped with a zero-load display, the zero-load adjustment of an automatic weighing system shall be maintained so that the device indicates or records a zero balance condition.

UR.4.2. Level Condition. If an automatic weighing system is equipped with a level-condition indicator, the automatic weighing system shall be maintained in level.

UR.4.3. Automatic Weighing System Modification. The length or the width of the load-receiving element of an automatic weighing system shall not be increased beyond the manufacturer's design dimension, nor shall the capacity of an automatic weighing system be increased beyond its design capacity by replacing or modifying the original primary indicating or recording element with one of a higher capacity, except when the modification has been approved by competent engineering authority, preferably that of the engineering department of the manufacturer of the automatic weighing system, and by the weights and measures authority having jurisdiction over the automatic weighing system.

Sec. 3.30. Liquid-Measuring Devices

A. Application

A.1. - This code applies to:

(a) devices used for the measurement of liquids, including liquid fuels and lubricants, and

(b) wholesale devices used for the measurement and delivery of agri-chemical liquids such as fertilizers, feeds, herbi-cides, pesticides, insecticides, fungicides, and defoliants.
(Added 1985)

A.2. - This code does not apply to:

(a) meters mounted on vehicle tanks (see Sec. 3.31. Code for Vehicle-Tank Meters),

(b) devices used for dispensing liquefied petroleum gases (see Sec. 3.32. Code for Liquefied Petroleum Gas and Anhydrous Ammonia Liquid-Measuring Devices),

(c) devices used for dispensing other liquids that do not remain in a liquid state at atmospheric pressures and temperatures,

(d) water meters, or

(e) devices used solely for dispensing a product in connection with operations in which the amount dispensed does not affect customer charges,

(f) mass flow meters (see Sec. 3.37. Code for Mass Flow Meters).
(Added 1994)

A.3. - In addition to the requirements of this code, liquid-measuring devices shall meet the requirements of Section 1.10. General Code.

S. Specifications

S.1. Indicating and Recording Elements and Recorded Representations.

S.1.1. General. - A liquid-measuring device:

(a) shall be equipped with a primary indicating element, and

(b) may be equipped with a primary recording element.

S.1.2. Units. - A liquid-measuring device shall indicate, and record if the device is equipped to record, its deliveries in liters, gallons, quarts, pints, fluid ounces, or binary-submultiples or decimal subdivisions of the liter or gallon.
(Amended 1987, 1994 and 2006)

S.1.2.1. Retail Motor-Fuel Devices. - Deliveries shall be indicated and recorded, if the device is equipped to record, in liters or gallons and decimal subdivisions or fractional equivalents thereof.
(Added 1979)

S.1.2.2. Agri-Chemical Liquid Devices.

S.1.2.2.1. Liquid Measure. - Deliveries shall be indicated and recorded in liters or gallons and decimal subdivisions or fractional equivalents thereof.

S.1.2.3. Value of Smallest Unit. - The value of the smallest unit of indicated delivery, and recorded delivery if the device is equipped to record, shall not exceed the equivalent of:

(a) 0.5 L (0.1 gal) on devices with a maximum rated flow rate of 750 L/min (200 gal/min) or less;

(b) 5 L (1 gal) on devices with a maximum rated flow of more than 750 L/min (200 gal/min);

(c) 5 L (1 gal) on meters with a rated maximum flow rate of 375 L/min (100 gal/min) or more used for jet fuel aviation refueling systems
(Added 2007)

This requirement does not apply to manually operated devices equipped with stops or stroke-limiting means.
(Amended 1983, 1986, and 2007)

S.1.3. Advancement of Indicating and Recording Elements. - It shall not be possible to advance primary indicating and recording elements except by the mechanical operation of the device. Clearing a device by advancing its elements to zero is permitted, but only if:

(a) once started, the advancement movement cannot be stopped until zero is reached, and

(b) in the case of indicating elements only, such elements are automatically obscured until the elements reach the correct zero position.

S.1.4. Graduations.

S.1.4.1. Length. - Graduations shall be varied in length so that they may be conveniently read.

S.1.4.2. Width. - In a series of graduations, the width of:

(a) every graduation shall be at least 0.2 mm (0.008 in) but not greater than the minimum clear interval between graduations, and

(b) main graduations shall be not more than 50 percent greater than the width of subordinate graduations.

S.1.4.3. Clear Interval Between Graduations. - The clear interval between graduations shall be not less than 1.0 mm (0.04 in). If the graduations are not parallel, the measurement shall be made:

(a) along the line of movement of the tip of the index of the indicator as it passes over the graduations, or

(b) if the indicator extends over the entire length of the graduations, at the point of widest separation of the graduations.

S.1.5. Indicators.

S.1.5.1. Symmetry. - The portion of the index of an indicator associated with the graduations shall be symmetrical with respect to the graduations.

S.1.5.2. Length.

(a) If the indicator and the graduations are in different planes, the index of the indicator shall extend to each graduation with which it is to be used.

(b) If the indicator is in the same plane as the graduations, the distance between the index of the indicator and the ends of the graduations, measured along the line of the graduations, shall be not more than 1.0 mm (0.04 in).

S.1.5.3. Width.

(a) The index of an indicator shall not be wider than the width of the narrowest graduation.
[Nonretroactive as of January 1, 2002]
(Amended 2000)

(b) If the index of an indicator extends over the entire length of a graduation, it shall be of uniform width throughout the portion that coincides with the graduation.

S.1.5.4. Clearance. - If the indicator and the graduations are in different planes, the clearance between the index of an indicator and the plane of the graduations shall be no greater than 1.5 mm (0.06 in).

S.1.5.5. Parallax. - Parallax effects shall be reduced to the practical minimum.

S.1.6. Additional Operating Requirements, Retail Devices (Except Slow Flow Meters).
(Amended 2006)

S.1.6.1. Indication of Delivery. - The device shall automatically show on its face the initial zero condition and the quantity delivered (up to the nominal capacity). However, the following requirements shall apply:

For electronic devices manufactured prior to January 1, 2006, the first 0.03 L (or 0.009 gal) of a delivery and its associated total sales price need not be indicated.

For electronic devices manufactured on or after January 1, 2006, the measurement, indication of delivered quantity, and the indication of total sales price shall be inhibited until the fueling position reaches conditions necessary to ensure that the delivery starts at zero.
[Nonretroactive as of January 1, 2006]
(Added 2005)
(Amended 1982 and 2005)

S.1.6.2. Provisions for Power Loss.

S.1.6.2.1. Transaction Information. *- In the event of a power loss, the information needed to complete any transaction in progress at the time of the power loss (such as the quantity and unit price, or sales price) shall be determinable for at least 15 minutes at the dispenser or at the console if the console is accessible to the customer.*
[Nonretroactive as of January 1, 1983.]

S.1.6.2.2. User Information. *- The device memory shall retain information on the quantity of fuel dispensed and the sales price totals during power loss.*
[Nonretroactive as of January 1, 1983.]

S.1.6.3. Return to Zero.

(a) The primary indicating elements, and primary recording elements if the device is equipped to record, shall be readily returnable to a definite zero indication. However, a key-lock operated or other self-operated device may be equipped with cumulative indicating or recording elements, provided that it is also equipped with a zero-return indicating element.

(b) It shall not be possible to return primary indicating elements, or primary recording elements beyond the correct zero position.
(Amended 1972)

S.1.6.4. Display of Unit Price and Product Identity.

S.1.6.4.1. Unit Price.

(a) A computing or money-operated device shall be able to display on each face the unit price at which the device is set to compute or to dispense.

(b) Whenever a grade, brand, blend, or mixture is offered for sale from a device at more than one unit price, then all of the unit prices at which that product is offered for sale shall be displayed or shall be capable of being displayed on the dispenser using controls available to the customer prior to the delivery of the product. It is not necessary that all of the unit prices for all grades, brands, blends, or mixtures be simultaneously displayed prior to the delivery of the product. This subsection shall not apply to fleet sales, other contract sales, or truck refueling sales (e.g., sales from dispensers used to refuel trucks).
[Effective and nonretroactive as of January 1, 1991.]
(Amended 1989 and 1997)

S.1.6.4.2. Product Identity.

(a) A device shall be able to conspicuously display on each side the identity of the product being dispensed.

(b) A device designed to dispense more than one grade, brand, blend, or mixture of product also shall be able to display on each side the identity of the grade, brand, blend, or mixture being dispensed.

S.1.6.5. Money-Value Computations.

(a) A computing device shall compute the total sales price at any single-purchase unit price (i.e., excluding fleet sales, other price contract sales, and truck stop dispensers used only to refuel trucks) for which the product being measured is offered for sale at any delivery possible within either the measurement range of the device or the range of the computing elements, whichever is less.
[Effective and nonretroactive as of January 1, 1991.]

(b) The analog sales price indicated for any delivered quantity shall not differ from a mathematically computed price (quantity x unit price = total sales price) by an amount greater than the value in Table 1.
(Amended 1984, 1989, and 1993)

S.1.6.5.1. Money-Value Divisions, Analog. - The values of the graduated intervals representing money values on a computing type device shall be no greater than those in Table 1.
(Amended 1991)

Table 1.
Money-Value Divisions and
Maximum Allowable Variations for Money-Value
Computations on Mechanical Analog Computers

Unit Price		Money Value Division	Maximum Allowable Variation	
From	To and Including		Design Test	Field Test
0	0.25/liter or $1.00/gallon	1¢	± 1¢	± 1¢
0.25/liter or $1.00/gallon	0.75/liter or $3.00/gallon	1¢ or 2¢	± 1¢	± 2¢
0.75/liter or $3.00/gallon	2.50/liter or $10.00/gallon	1¢ or 2¢	± 1¢	± 2¢
0.75/liter or $3.00/gallon	2.50/liter or $10.00/gallon	5¢	± 2 1/2¢	± 5¢

S.1.6.5.2. Money-Value Divisions, Digital. - A computing type device with digital indications shall comply with the requirements of paragraph G.S.5.5. Money Values, Mathematical Agreement, and the total price computation shall be based on quantities not exceeding 0.05 liter for devices indicating in metric units and 0.01-gallon intervals for devices indicating in inch-pound units.
(Added 1980)

S.1.6.5.3. Auxiliary Elements. *- If a system is equipped with auxiliary indications, all indicated money value divisions of the auxiliary element shall be identical with those of the primary element.*
[Nonretroactive as of January 1, 1985.]

S.1.6.5.4. Selection of Unit Price. *- Except for dispensers used exclusively for fleet sales, other price contract sales, and truck refueling (e.g., truck stop dispensers used only to refuel trucks), when a product or grade is offered for sale at more than one unit price through a computing device, the selection of the unit price shall be made prior to delivery using controls on the device or other customer-activated controls.* A system shall not permit a change to the unit price during delivery of product.
[Nonretroactive as of January 1, 1991.]
(Added 1989) (Amended 1991, 1992, 1993, and 1996)

S.1.6.5.5. Display of Quantity and Total Price. *– Except for aviation refueling applications, when a delivery is completed, the total price and quantity for that transaction shall be displayed on the face of the dispenser for at least 5 minutes or until the next transaction is initiated by using controls on the device or other customer-activated controls..*
[Nonretroactive as of January 1, 1994.]
(Added 1992) (Amended 1996 and 2007)

S.1.6.5.6. Display of Quantity and Total Price, Aviation Refueling Applications.

(a) The quantity shall be displayed throughout the transaction.

(b) The total price shall be also displayed under one of the following conditions:

i. The total price can appear on the face of the dispenser or through a controller adjacent to the device.

ii. If a device is designed to continuously compute and display the total price, then the total price shall be computed and displayed throughout the transaction for the quantity delivered.

(c) The total price and quantity shall be displayed for at least 5 minutes or until the next transaction is initiated by using controls on the device or other customer-activated controls.

(d) A printed receipt shall be available and shall include, at a minimum, the total price, quantity, and unit price.
[Nonretroactive as of January 1, 2008]
(Added 2007)

S.1.6.6. Agreement Between Indications. - When a quantity value indicated or recorded by an auxiliary element is a derived or computed value based on data received from a retail motor fuel dispenser, the value may differ from the quantity value displayed on the dispenser, provided the following conditions are met:

(a) all total money values for an individual sale that are indicated or recorded by the system agree, and

(b) within each element, the values indicated or recorded meet the formula (quantity x unit price = total sales price) to the closest cent.
[Nonretroactive as of January 1, 1988.]
(Added 1985) (Amended 1987 and 1988)

S.1.6.7. Recorded Representations. *- Except for fleet sales and other price contract sales, a printed receipt providing the following information shall be available through a built-in or separate recording element for all transactions conducted with point-of-sale systems or devices activated by debit cards, credit cards, and/or cash.*

(a) the total volume of the delivery,

(b) the unit price,

(c) the total computed price, and

(d) the product identity by name, symbol, abbreviation, or code number.
[Nonretroactive as of January 1, 1986.]
(Added 1985) (Amended 1997)

S.1.6.8. Lubricant Devices, Travel of Indicator. – The indicator shall move at least 2.5 cm (1 in) in relation to the graduations, if provided, for a delivery of 0.5 L (1 pt).

S.1.7. Additional Operating Requirements, Wholesale Devices Only.
(Amended 2006)

S.1.7.1. Travel of Indicator. - A wholesale device shall be readily operable to deliver accurately any quantity from 200 L (50 gal) to the capacity of the device. If the most sensitive element of the indicating system utilizes an indicator and graduations, the relative movement of these parts corresponding to a delivery of 4 L (1 gal) shall be not less than 5 mm (0.20 in).
(Amended 1987)

S.1.7.2. Money Values-Mathematical Agreement. - Any digital money-value indication and any recorded money value on a computing-type device shall be in mathematical agreement with its associated quantity indication or representation to within one cent of money value.

S.2. Measuring Elements.

S.2.1. Vapor Elimination.

(a) A liquid-measuring device shall be equipped with a vapor or air eliminator or other automatic means to prevent the passage of vapor and air through the meter.

(b) Vent lines from the air or vapor eliminator shall be made of metal tubing or other rigid material.
(Amended 1975)

S.2.1.1. Vapor Elimination on Loading Rack Metering Systems.

(a) A loading rack metering system shall be equipped with a vapor or air eliminator or other automatic means to prevent the passage of vapor and air through the meter unless the system is designed or operationally controlled by a method, approved by the weights and measures jurisdiction having control over the device, such that air and/or vapor cannot enter the system.

(b) Vent lines from the air or vapor eliminator (if present) shall be made of metal tubing or other rigid material.
(Added 1994)

Table S.2.2. Categories of Device and Methods of Sealing

Category of Device	*Method of Sealing*
Category 1: No remote configuration capability.	*Seal by physical seal or two event counters: one for calibration parameters and one for configuration parameters.*
Category 2: Remote configuration capability, but access is controlled by physical hardware. *The device shall clearly indicate that it is in the remote configuration mode and record such message if capable of printing in this mode or shall not operate while in this mode.*	*[The hardware enabling access for remote communication must be on-site. The hardware must be sealed using a physical seal or an event counter for calibration parameters and an event counter for configuration parameters. The event counters may be located either at the individual measuring device or at the system controller; however, an adequate number of counters must be provided to monitor the calibration and configuration parameters of the individual devices at a location. If the counters are located in the system controller rather than at the individual device, means must be provided to generate a hard copy of the information through an on-site device.]** *[*Nonretroactive as of January 1, 1996]*
Category 3: Remote configuration capability access may be unlimited or controlled through a software switch (e.g., password). *[Nonretroactive as of January 1, 1995.]* *The device shall clearly indicate that it is in the remote configuration mode and record such message if capable of printing in this mode or shall not operate while in this mode.* *[Nonretroactive as of January 1, 2001]*	*An event logger is required in the device; it must include an event counter (000 to 999), the parameter ID, the date and time of the change, and the new value of the parameter. A printed copy of the information must be available through the device or through another on-site device. The event logger shall have a capacity to retain records equal to ten times the number of sealable parameters in the device, but not more than 1000 records are required. (Note: Does not require 1000 changes to be stored for each parameter.)*

[Nonretroactive as of January 1, 1995.]
(Table added 1993) (Amended 1995, 1998, 1999, 2005 and 2006)

S.2.2. Provision for Sealing. - Adequate provision shall be made for an approved means of security (e.g., data change audit trail) or for physically applying a security seal in such a manner that requires the security seal to be broken before an adjustment can be made of:

(a) any measuring or indicating element,

(b) any adjustable element for controlling delivery rate when such rate tends to affect the accuracy of deliveries, and

(c) any metrological parameter that will affect the metrological integrity of the device or system.

When applicable, the adjusting mechanism shall be readily accessible for purposes of affixing a security seal.

*[Audit trails shall use the format set forth in Table S.2.2.]**
*[*Nonretroactive as of January 1, 1995.]*
(Amended 1991, 1993, 1995, 2003 and 2006)

S.2.2.1. Multiple Measuring Elements With a Single Provision for Sealing. *– A change to the adjustment of any measuring element shall be individually identified.*
[Nonretroactive as of January 1, 2005]

Note 1: Examples of acceptable identification of a change to the adjustment of a measuring element include, but are not limited to:

(a) a broken, missing, or replaced physical seal on an individual measuring element;

(b) a change in a calibration factor for each measuring element;

(c) a display of the date or the number of days since the last calibration event for each measuring element; or

(d) a counter indicating the number of calibration events per measuring element.
(Added 2004) (Amended 2006)

Note 2: Paragraph S.2.2.1. Multiple Measuring Elements with a Single Provision for Sealing will be removed in the 2010 edition of Handbook 44 when General Code paragraph G-S.8.1. Multiple Weighing or Measuring Elements with a Single Provision for Sealing becomes effective.
(Added 2007)

S.2.3. Directional Flow Valves. - Valves intended to prevent reversal of flow shall be automatic in operation.

S.2.4. Stop Mechanism.

S.2.4.1. Indication. - The delivery for which the device is set shall be conspicuously indicated.
(Amended 1983)

S.2.4.2. Stroke Limiting Elements. - Stops or other stroke limiting elements subject to direct pressure or impact shall be:

(a) made secure by positive, nonfrictional engagement of these elements; and

(b) adjustable to provide for deliveries within tolerances.
(Amended 1983)

S.2.4.3. Setting. - If two or more stops or other elements may be selectively brought into operation to permit predetermined quantities of deliveries,

(a) the position for the proper setting of each such element shall be accurately defined; and

(b) any inadvertent displacement from the proper setting shall be obstructed.
(Amended 1983)

S.2.5. Zero-Set-Back Interlock, Retail Motor-Fuel Devices. - A device shall be constructed so that:

(a) after a delivery cycle has been completed by moving the starting lever to any position that shuts off the device, an automatic interlock prevents a subsequent delivery until the indicating elements, and recording elements if the device is equipped and activated to record, have been returned to their zero positions;

(b) the discharge nozzle cannot be returned to its designed hanging position (that is, any position where the tip of the nozzle is placed in its designed receptacle and the lock can be inserted) until the starting lever is in its designed shut-off position and the zero-set-back interlock has been engaged; and

(c) in a system with more than one dispenser supplied by a single pump, an effective automatic control valve in each dispenser prevents product from being delivered until the indicating elements on that dispenser are in a correct zero position.
(Amended 1981 and 1985)

S.2.6. Temperature Determination - Wholesale Devices*. - For test purposes, means shall be provided (e.g., thermometer well) to determine the temperature of the liquid either:*

(a) in the liquid chamber of the meter, or

(b) immediately adjacent to the meter in the meter inlet or discharge line.
[Nonretroactive as of January 1, 1985.]
(Added 1984) (Amended 1986)

S.2.7. Wholesale Devices Equipped with Automatic Temperature Compensators.

S.2.7.1. Automatic Temperature Compensation. A device may be equipped with an automatic means for adjusting the indication and registration of the measured volume of product to the volume at 15°C (60°F).

S.2.7.2. Provision for Deactivating. - On a device equipped with an automatic temperature-compensating mechanism that will indicate or record only in terms of gallons compensated to 15°C (60°F), provision shall be made for deactivating the automatic temperature-compensating mechanism so that the meter can indicate, and record if it is equipped to record, in terms of the uncompensated volume.
(Amended 1972)

S.2.7.3. Provision for Sealing Automatic Temperature Compensating Systems. - Provision shall be made for applying security seals in such a manner that an automatic temperature-compensating system cannot be disconnected and that no adjustment may be made to the system without breaking the seal.

S.2.7.4. Temperature Determination with Automatic Temperature Compensation. - For test purposes, means shall be provided (e.g., thermometer well) to determine the temperature of the liquid either:

(a) in the liquid chamber of the meter, or

(b) immediately adjacent to the meter in the meter inlet or discharge line.
(Amended 1987)

S.2.8. Exhaustion of Supply, Lubricant Devices Other Than Meter Types. - When the level of the supply of lubricant becomes so low as to compromise the accuracy of measurement, the device shall:

(a) become inoperable automatically, or

(b) give a conspicuous and distinct warning.

S.3. Discharge Lines and Valves.

S.3.1. Diversion of Measured Liquid. - No means shall be provided by which any measured liquid can be diverted from the measuring chamber of the meter or its discharge line. Two or more delivery outlets may be installed only if automatic means are provided to ensure that:

(a) liquid can flow from only one outlet at a time, and

(b) the direction of flow for which the mechanism may be set at any time is clearly and conspicuously indicated.

An outlet that may be opened for purging or draining the measuring system or for recirculating, if recirculation is required in order to maintain the product in a deliverable state, shall be permitted only when the system is measuring food products, agri-chemicals, biodiesel, or biodiesel blends. Effective automatic means shall be provided to prevent passage of liquid through any such outlet during normal operation of the measuring system and to inhibit meter indications (or advancement of indications) and recorded representations while the outlet is in operation.
(Amended 1991, 1995, 1996, and 2007)

S.3.2. Exceptions. - The provisions of S.3.1. Diversion Prohibited shall not apply to truck refueling devices when diversion of flow to other than the receiving vehicle cannot readily be accomplished and is readily apparent. Allowable deterrents include, but are not limited to, physical barriers to adjacent driveways, visible valves, or lighting systems that indicate which outlets are in operation, and explanatory signs.
(Amended 1982, 1990, 1991 and 2002)

S.3.3. Pump-Discharge Unit. - A pump-discharge unit equipped with a flexible discharge hose shall be of the wet-hose type.

S.3.4. Gravity-Discharge Unit. - On a gravity-discharge unit:

(a) the discharge hose or equivalent pipe shall be of the dry-hose type with no shutoff valve at its outlet end unless the hose or pipe drains to the same level under all conditions of use;

(b) the dry hose shall be sufficiently stiff and only as long as necessary to facilitate drainage;

(c) an automatic vacuum breaker, or equivalent mechanism, shall be incorporated to prevent siphoning and to ensure rapid and complete drainage; and

(d) the inlet end of the hose or outlet pipe shall be high enough to ensure complete drainage.

S.3.5. Discharge Hose, Reinforcement. - A discharge hose shall be reinforced so that the performance of the device is not affected by the expansion or contraction of the hose.

S.3.6. Discharge Valve. - A discharge valve may be installed in the discharge line only if the device is of the wet-hose type. Any other shutoff valve on the discharge side of the meter shall be of the automatic or semi-automatic predetermined-stop type or shall be operable only:

(a) by means of a tool (but not a pin) entirely separate from the device, or

(b) by mutilation of a security seal with which the valve is sealed open.

S.3.7. Antidrain Means. - In a wet-hose pressure-type device, means shall be incorporated to prevent the drainage of the discharge hose.
(Amended 1990)

S.4. Marking Requirements.

S.4.1. Limitation on Use. - The limitations on its use shall be clearly and permanently marked on any device intended to measure accurately only:

(a) products having particular properties; or

(b) under specific installation or operating conditions; or

(c) when used in conjunction with specific accessory equipment.

S.4.2. Air Pressure. - If a device is operated by air pressure, the air pressure gauge shall show by special graduations or other means the maximum and minimum working pressures recommended by the manufacturer.

S.4.3. Wholesale Devices.

S.4.3.1. Discharge Rates. - A wholesale device shall be marked to show its designed maximum and minimum discharge rates. However, the minimum discharge rate shall not exceed 20 percent of the maximum discharge rate.

S.4.3.2. Temperature Compensation. - If a device is equipped with an automatic temperature compensator, the primary indicating elements, recording elements, and recorded representation shall be clearly and conspicuously marked to show that the volume delivered has been adjusted to the volume at 15 °C (60 °F).

S.4.4. Retail Devices.

S.4.4.1. Discharge Rates. *- On a retail device with a designed maximum discharge rate of 115 L (30 gal) per minute or greater, the maximum and minimum discharge rates shall be marked in accordance with S.4.4.2. The marked minimum discharge rate shall not exceed 20% of the marked maximum discharge rate.*
[Nonretroactive as of January 1, 1985.]
(Added 1984) (Amended 2002 and 2003)

Example: With a marked maximum discharge rate of 230 L/min (60 gpm), the marked minimum discharge rate shall be 45 L/min (12 gpm) or less (e.g., 40 L/min (10 gpm) is acceptable). A marked minimum discharge rate greater than 45 L/min (12 gpm) (e.g., 60 L/min [15 gpm]) is not acceptable.
(Added 2003)

S.4.4.2. Location of Marking Information; Retail Motor-Fuel Dispensers. *– The marking information required in the General Code, Paragraph G-S.1. Identification shall appear as follows:*

(a) within 60 cm (24 in) to 150 cm (60 in) from the base of the dispenser;

(b) either internally and/or externally provided the information is permament and easily read; and

(c) on a portion of the device that cannot be readily removed or interchanged (i.e., not on a service access panel).

Note: *The use of a dispenser key or tool to acess internal marking information is permitted for Retail Liquid Measuring Devices.*
[Nonretroactive as of January 1, 2003]
(Added 2002) (Amended 2004 and 2006)

S.5. Totalizers for Retail Motor-Fuel Dispensers. *- Retail motor-fuel dispensers shall be equipped with a nonresettable totalizer for the quantity delivered through the metering device.*
[Nonretroactive as of January 1, 1995.]
(Added 1993) (Amended 1994 and 1997)

N. Notes

N.1. Test Liquid.

N.1.1. Type of Liquid. - The liquid used for testing a liquid-measuring device shall be the type the device is used to measure, or another liquid with the same general physical characteristics.

N.1.2. Labeling. - Following the completion of a successful examination of a wholesale device, the weights and measures official should attach a label or tag indicating the type of liquid used during the test.

N.2. Volume Change. - Care shall be taken to minimize changes in volume of the test liquid due to temperature changes and evaporation losses.

N.3. Test Drafts.

N.3.1. Retail Piston-Type and Visible-Type Devices. – Test drafts shall include the full capacity delivery and each intermediate delivery for which the device is designed.

N.3.2. Slow Flow Meters. - Test drafts shall be equal to at least four times the minimum volume that can be measured and indicated through either a visible indication or an audible signal.

N.3.3. Lubricant Devices. - Test drafts shall be 1 L (1 qt). Additional test drafts may include 0.5 L (1 pt), 4 L (4 qt), and 6 L (6 qt).

N.3.4. Other Retail Devices. - On devices with a designed maximum discharge rate of:

(a) less than 80 L (20 gal) per minute, tests shall include drafts of one or more amounts, including a draft of at least 19 liters (5 gal).

(b) 80 L (20 gal) per minute or greater, tests shall include drafts of one or more amounts, including a draft of at least the amount delivered by the device in one minute at the maximum flow rate of the installation.
(Amended 1984)

N.3.5. Wholesale Devices. - The delivered quantity should be equal to at least the amount delivered by the device in one minute at its maximum discharge rate, and shall in no case be less than 200 L (50 gal).
(Amended 1987 and 1996)

4002.8. Liquid-Measuring Devices. (3.30.)

(a) Wholesale Devices Equipped With Automatic Temperature Compensating Systems. On wholesale devices equipped with automatic temperature compensating systems, normal tests:

(1) shall be conducted with the temperature compensating system connected and operating by comparing the compensated volume indicated or recorded to the actual delivered volume corrected to 60°F, and

(2) may be conducted with the temperature compensating system deactivated by comparing the uncompensated volume indicated or recorded to the actual delivered volume.

The first test shall be performed with the automatic temperature compensating system operating in the "as found" condition.

On devices that indicate or record both the compensated and uncompensated volume for each delivery, the tests in (1) and (2) may be performed as a single test.

N.4. Testing Procedures.

N.4.1. Normal Tests. - The "normal" test of a device shall be made at the maximum discharge flow rate developed under the conditions of installation. Any additional tests conducted at flow rates down to and including one-half of the sum of the maximum discharge flow rate and the rated minimum discharge flow rate shall be considered normal tests.
(Amended 1991)

N.4.1.1. Wholesale Devices Equipped with Automatic Temperature-Compensating Systems.

[NOT ADOPTED]

N.4.1.2. Repeatability Tests. - Tests for repeatability should include a minimum of three consecutive test drafts of approximately the same size and be conducted under controlled conditions where variations in factors, such as temperature, pressure, and flow rate are reduced to the extent that they will not affect the results obtained.
(Added 2001)

N.4.2. Special Tests. - "Special" tests shall be made to develop the operating characteristics of a device and any special elements and accessories attached to or associated with the device. Any test except as set forth in N.4.1. shall be considered a special test.
(Amended 2005)

N.4.2.1. Slow-Flow Meters. - A "special" test shall be made at a flow rate:

(a) not larger than twice the actual minimum flow rate, and

(b) not smaller than the actual minimum flow rate of the installation.

N.4.2.2. Retail Motor-Fuel Devices.

(a) Devices without a marked minimum flow-rate shall have a "special" test performed at the slower of the following rates:

(1) 19 L (5 gal) per minute, or

(2) the minimum discharge rate at which the device will deliver when equipped with an automatic discharge nozzle set at its slowest setting.

(b) Devices with a marked minimum flow-rate shall have a "special" test performed at or near the marked minimum flow rate.

(Added 1984) (Amended 2005)

N.4.2.3. Other Retail Devices. - "Special" tests of other retail devices shall be made at the slower of the following rates:

(a) 50 percent of the maximum discharge rate developed under the conditions of installation, or

(b) the minimum discharge rate marked on the device.

N.4.2.4. Wholesale Devices. - "Special" tests shall be made to develop the operating characteristics of a measuring system and any special associated or attached elements and accessories. "Special" tests shall include a test at the slower of the following rates:

(a) 20 percent of the marked maximum discharge rate; or

(b) the minimum discharge rate marked on the device.

N.4.3. Money-Value Computation Tests.

N.4.3.1. Laboratory Tests. - When testing the device in the laboratory:

(a) compliance with paragraph S.1.6.5., Money Value Computations, shall be determined by using the cone gear as a reference for the total quantity delivered;

(b) the indicated quantity shall agree with the cone gear representation with the index of the indicator within the width of the graduation; and

(c) the maximum allowable variation of the indicated sales price shall be as shown in Table 1. (Amended 1984)

N.4.3.2. Field Tests. - In the conduct of field tests to determine compliance with paragraph S.1.6.5., the maximum allowable variation in the indicated sales price shall be as shown in Table 1.
(Added 1982; Amended 1984)

N.5. Temperature Correction on Wholesale Devices. - Corrections shall be made for any changes in volume resulting from the differences in liquid temperatures between time of passage through the meter and time of volumetric determination in the prover. When adjustments are necessary, appropriate petroleum measurement tables should be used.
(Amended 1974)

T. Tolerances

T.1. Application to Underregistration and to Overregistration. The tolerances hereinafter prescribed shall be applied to errors of underregistration and errors of overregistration, whether or not a device is equipped with an automatic temperature compensator.

T.2. Tolerance Values. - Maintenance, Acceptance, and Special Test Tolerances shall be as shown in Table T.2.
(Amended 2002)

T.3. Repeatability. - When multiple tests are conducted at approximately the same flow rate and draft size, the range of the test results for the flow rate shall not exceed 40 percent of the absolute value of the maintenance tolerance and the results of each test shall be within the applicable tolerance. This tolerance does not apply to the test of the automatic temperature compensating system. See also N.4.1.2.
(Added 1992) (Amended 2001 and 2002)

T.4. Automatic Temperature Compensating Systems. - *The difference between the meter error (expressed as a percentage) for results determined with and without the automatic temperature compensating system activated shall not exceed:*

(a) 0.2 percent for mechanical automatic temperature compensating systems; and

(b) 0.1 percent for electronic automatic temperature compensating systems.

The delivered quantities for each test shall be approximately the same size. The results of each test shall be within the applicable acceptance or maintenance tolerance.
[Nonretroactive as of January 1, 1988.]

Table T.2. Accuracy Classes for Liquid Measuring Devices Covered in NIST Handbook 44 Section 3.30

Accuracy Class	Application	Acceptance Tolerance	Maintenance Tolerance	Special Test Tolerance[1]
0.3	-Petroleum products delivered from large capacity (flow rates greater than 115 L/min or 30 gpm)** devices including motor fuel devices -Heated products (other than asphalt) at or greater than 50 C -Asphalt at or below temperatures 50 °C -All other liquids not shown in the table where the typical delivery is over 200 L (50 gal).	0.2 %	0.3 %	0.5 %
0.3A	-Asphalt at temperatures greater than 50 °C.	0.3 %	0.3 %	0.5 %
0.5*	-Petroleum products delivered from small capacity (at 4 L/min (1 gpm) through 115 L/min or 30 gpm)** motor fuel devices -Agri-chemical liquids -And all other applications not shown in the table where the typical delivery is ≤200 L (50 gal).	0.3 %	0.5 %	0.5 %
1.1	-Petroleum products and other normal liquids from devices with flow rates** less than 1 gpm -Devices designed to deliver less than one gallon.	0.75 %	1.0 %	1.25 %

*For test drafts ≤40 L or 10 gal, the tolerances specified for Accuracy Class 0.5 in the table above do not apply. For these test drafts, the following applies:

(a) Maintenance tolerances on normal and special tests shall be 20 ml plus 4 ml per indicated liter or 1 in^3 plus 1 in^3 per indicated gallon.

(b) Acceptance tolerances on normal and special tests shall be one-half the maintenance tolerance values.

[1] Special test tolerances are not applicable to retail motor fuel dispensers.

** Flow rate refers to designed or marked maximum flow rate.

(Added 2002) (Amended 2006)

UR. User Requirements

UR.1. Selection Requirements.

UR.1.1. Discharge Hose.

UR.1.1.1. Length. - The length of the discharge hose on a retail motor-fuel device:

(a) shall be measured from its housing or outlet of the discharge line to the inlet of the discharge nozzle;

(b) shall be measured with the hose fully extended if it is coiled or otherwise retained or connected inside a housing; and

(c) shall not exceed 5.5 m (18 ft) unless it can be demonstrated that a longer hose is essential to permit deliveries to be made to receiving vehicles or vessels.

An unnecessarily remote location of a device shall not be accepted as justification for an abnormally long hose.
(Amended 1972 and 1987)

UR.1.1.2. Marinas and Airports.

UR.1.1.2.1. Length. - The length of the discharge hose shall be as short as practicable, and shall not exceed 15 m (50 ft) unless it can be demonstrated that a longer hose is essential.

UR.1.1.2.2. Protection. - Discharge hoses exceeding 8 m (26 ft) in length shall be adequately protected from weather and other environmental factors when not in use.
(Made retroactive 1974 and amended 1984)

UR.2. Installation Requirements.

UR.2.1. Manufacturer's Instructions. - A device shall be installed in accordance with the manufacturer's instructions, and the installation shall be sufficiently secure and rigid to maintain this condition.
(Added 1987)

UR.2.2. Discharge Rate. - A device shall be installed so that the actual maximum discharge rate will not exceed the rated maximum discharge rate. Automatic means for flow regulation shall be incorporated in the installation if necessary.

UR.2.3. Suction Head. - A piston-type device shall be installed so that the total effective suction head will not be great enough to cause vaporization of the liquid being dispensed under the highest temperature and lowest barometric pressure likely to occur.

UR.2.4. Diversion of Liquid Flow. - A motor-fuel device equipped with two delivery outlets used exclusively in the fueling of trucks shall be so installed that any diversion of flow to other than the receiving vehicle cannot be readily accomplished and is readily apparent. Allowable deterrents include, but are not limited to, physical barriers to adjacent driveways, visible valves, or lighting systems that indicate which outlets are in operation, and explanatory signs.
(Amended 1991)

UR.2.5. Product Storage Identification.

(a) The fill connection for any petroleum product storage tank or vessel supplying motor-fuel devices shall be permanently, plainly, and visibly marked as to product contained.

(b) When the fill connection device is marked by means of a color code, the color code key shall be conspicuously displayed at the place of business.
(Added 1975 and amended 1976)

UR.3. Use of Device.

UR.3.1. Return of Indicating and Recording Elements to Zero. - On any dispenser used in making retail deliveries, the primary indicating element, and recording element if so equipped, shall be returned to zero before each delivery.

Exceptions to this requirement are totalizers on key-lock-operated or other self-operated dispensers and the primary recording element if the device is equipped to record.

UR.3.2. Unit Price and Product Identity.

(a) The following information shall be conspicuously displayed or posted on the face of a retail dispenser used in direct sale:

(1) except for dispensers used exclusively for fleet sales, other price contract sales, and truck refueling (e.g., truck stop dispensers used only to refuel trucks), all of the unit prices at which the product is offered for sale; and

(2) in the case of a computing type or money-operated type, the unit price at which the dispenser is set to compute.

Provided that the dispenser complies with S.1.6.4.1., it is not necessary that all the unit prices for all grades, brands, blends, or mixtures be simultaneously displayed or posted.

(b) The following information shall be conspicuously displayed or posted on each side of a retail dispenser used in direct sale:

(1) the identity of the product in descriptive commercial terms, and

(2) the identity of the grade, brand, blend, or mixture that a multi-product dispenser is set to deliver.
(Amended 1972, 1983, 1987, 1989, 1992, and 1993)

UR.3.3. Computing Device. - Any computing device used in an application where a product or grade is offered for sale at one or more unit prices shall be used only for sales for which the device computes and displays the sales price for the selected transaction.
(Added 1989) (Amended 1992 and 2000)

The following exceptions apply:

(a) Fleet sales and other price contract sales are exempt from this requirement.

(b) A truck stop dispenser used exclusively for refueling trucks is exempt from this requirement provided that:

(1) all purchases of fuel are accompanied by a printed receipt of the transaction containing the applicable price per gallon, the total gallons delivered, and the total price of the sale; and
(Added 1993)

(2) unless a dispenser complies with S.1.6.4.1. (Display of Unit Price), the price posted on the dispenser and the price at which the dispenser is set to compute shall be the highest price for any transaction which may be conducted.
(Added 1993)

(Amended 2005 and 2006)

UR.3.4. Printed Ticket. - The total price, the total volume of the delivery, and the price per gallon or liter shall be shown, either printed or in clear hand script, on any printed ticket issued by a device and containing any one of these values.
(Amended 2001)

UR.3.5. Steps After Dispensing. - After delivery to a customer from a retail motor-fuel device:

(a) the starting lever shall be returned to its shutoff position and the zero-set-back interlock engaged; and

(b) the discharge nozzle shall be returned to its designed hanging position unless the primary indicating elements, and recording elements if the device is equipped and activated to record, have been returned to a definite zero indication.

UR.3.6. Temperature Compensation, Wholesale.

UR.3.6.1. Automatic.

UR.3.6.1.1. When to be Used. - If a device is equipped with a mechanical automatic temperature compensator, it shall be connected, operable, and in use at all times. An electronic or mechanical automatic temperature compensating system may not be removed, nor may a compensated device be replaced with an uncompensated device, without the written approval of the responsible weights and measures jurisdiction.

[Note: This requirement does not specify the method of sale for product measured through a meter.]
(Amended 1989)

UR.3.6.1.2. Invoices.

(a) A written invoice based on a reading of a device that is equipped with an automatic temperature compensator shall show that the volume delivered has been adjusted to the volume at 15 °C (60 °F).

(b) The invoice issued from an electronic wholesale device equipped with an automatic temperature compensating system shall also indicate: (1) the API gravity, specific gravity or coefficient of expansion for the product; (2) product temperature; and (3) gross reading.
(Amended 1987)

UR.3.6.2. Nonautomatic.

UR.3.6.2.1. Temperature Determination. - If the volume of the product delivered is adjusted to the volume at 15 °C (60 °F), the product temperature shall be taken during the delivery in:

(a) the liquid chamber of the meter, or

(b) the meter inlet or discharge line adjacent to the meter, or

(c) the compartment of the receiving vehicle at the time it is loaded.

UR.3.6.2.2. Invoices. - The accompanying invoice shall indicate that the volume of the product has been adjusted for temperature variations to a volume at 15 °C (60 °F) and shall also state the product temperature used in making the adjustment.

UR.3.6.3. Period of Use. – When fuel is bought or sold on an automatic or nonautomatic temperature-compensated basis, it shall be bought or sold using this method over at least a consecutive 12-month period, unless otherwise agreed to by both the buyer and seller in writing.
(Added 2003)

LMD CODE INDEX

Acceptance D3-15, D3-14, D3-16
Adjustable element D3-7
Advancement D3-2
Agreement D3-6
Agri-chemical D3-1, D3-16
Agri-chemical liquids D3-1, D3-16
Antidrain means D3-10
Automatic D3-6, D3-8, D3-9, D3-10, D3-11, D3-12, D3-13, D3-14, D3-16, D3-17, D3-19
Automatic temperature compensating systems D3-9, D3-12, D3-16
Automatic temperature compensation D3-9
Automatic temperature compensators D3-9
Auxiliary elements D3-5

Blend D3-4, D3-5, D3-18

Clear interval D3-2
Clearance D3-2
Computing device D3-5, D3-18

Directional flow valves D3-8
Discharge hose D3-10, D3-17
Discharge lines D3-9
Discharge rate D3-10, D3-11, D3-13, D3-17
Discharge rates D3-10, D3-11
Diversion of liquid D3-17
Dry hose D3-10

Fleet sales D3-5, D3-18

Grade D3-4, D3-5, D3-18
Graduations D3-2, D3-3, D3-6, D3-10
Gravity-discharge unit D3-10

Index of an indicator D3-2, D3-3
Indicating element D3-1, D3-3, D3-18
Indicators D3-2
Installation requirements D3-17
Interlock D3-8, D3-19
Invoices D3-19, D3-20

Key-lock D3-3, D3-18

Lubricant devices D3-6, D3-9, D3-11

Maintenance D3-15, D3-14, D3-16
Marking requirements D3-10
Mass D3-1
Mass flow meters D3-1
Measuring elements D3-6
Money values-mathematical agreement D3-6
Money-value computation D3-13
Money-value computations D3-4, D3-5
Money-value divisions D3-4, D3-5
Motor-fuel device D3-17, D3-19

Nonautomatic D3-20
Normal tests D3-12, D3-15

Operating requirements D3-3, D3-6

Parallax D3-3
Point of sale systems D3-6
Power loss D3-3
Price contract sales D3-5, D3-18
Primary indicating element D3-1, D3-18
Printed ticket D3-19
Product identity D3-4, D3-6, D3-18
Provision for sealing D3-7, D3-9
Pump-discharge unit D3-10

Quantity D3-3, D3-5, D3-6, D3-11, D3-13

Recording element D3-1, D3-18
Repeatability D3-15, D3-16
Retail devices D3-1, D3-3, D3-11, D3-13, D3-14
Retail motor-fuel device D3-17, D3-19
Retail motor-fuel dispensers D3-7, D3-11
Return to zero D3-3

Seal D3-7, D3-9, D3-10
Sealing D3-7, D3-9
Security D3-7, D3-9, D3-10
Selection of unit price D3-5
Slow flow meters D3-3, D3-11
Special tests D3-12, D3-15, D3-14
Stop mechanism D3-8

Temperature correction D3-13
Temperature determination D3-9, D3-20
Test drafts D3-11
Tolerances D3-8, D3-14, D3-15, D3-16
Total price D3-5, D3-18, D3-19
Totalizers D3-11, D3-18
Travel of indicator D3-6
Truck refueling D3-5, D3-10, D3-18

Unit price D3-3, D3-4, D3-5, D3-6, D3-18, D3-19

User information D3-3
Valves D3-8, D3-9, D3-10, D3-17
Vapor elimination D3-6

Wet-hose D3-10
Wholesale devices D3-1, D3-2, D3-6, D3-9, D3-10, D3-11, D3-12, D3-13, D3-16
Zero-set-back interlock D3-8, D3-19

[THIS PAGE LEFT INTENTIONALLY BLANK]

Sec. 3.31. Vehicle-Tank Meters

A. Application

A.1. - This code applies to meters mounted on vehicle tanks including those used for the measurement and delivery of petroleum products or agri-chemical liquids such as fertilizers, feeds, pesticides, defoliants, and bulk deliveries of water.
(Amended 1985 and 1995)

A.2. - This code does not apply to the following devices:

(a) Devices used for dispensing liquefied petroleum gases (for which see Sec. 3.32; Code for Liquefied Petroleum Gas and Anhydrous Ammonia Liquid-Measuring Devices), or other liquids that do not remain in a liquid state at atmospheric pressures and temperatures.

(b) Devices used solely for dispensing a product in connection with operations in which the amount dispensed does not affect customer charges.

(c) Vehicle tanks used as measures (for which see Sec. 4.40; Code for Vehicle Tanks Used as Measures).

(d) Mass flow meters (see Sec. 3.37. Code for Mass Flow Meters).
(Added 1994)

A.3. - See also Sec. 1.10; General Code requirements.

S. Specifications

S.1. Design of Indicating and Recording Elements and of Recorded Representations.

S.1.1. Primary Elements.

S.1.1.1. General. - A meter shall be equipped with a primary indicating element and may also be equipped with a primary recording element.

[**Note:** Except for systems used solely for the sale of aviation fuel into aircraft and for aircraft-related operations, vehicle-tank meters shall be equipped with a primary recording element as required by paragraph UR.2.2.]
(Amended 1993, 2000 and 2006)

S.1.1.2. Units.

(a) A meter shall indicate, and record if the meter is equipped to record, its deliveries in terms of liters (gallons). Fractional parts of the liter (gallon) shall be in terms of either decimal or binary subdivisions.

(b) When it is an industry practice to purchase and sell milk by weight based upon 1.03 kg/L (8.6 lb/gal), the primary indicating element may indicate in kilograms (pounds) and decimal kilograms (pounds). The weight value division shall be a decimal multiple or submultiple of 1, 2, or 5. (See S.5.5.)

S.1.1.3. Value of Smallest Unit. - The value of the smallest unit of indicated delivery, and recorded delivery if the meter is equipped to record, shall not exceed the equivalent of:

(a) 0.5 L (0.1 gal) or 0.5 kg (1 lb) on milk-metering systems,

(b) 0.5 L (0.1 gal) on meters with a rated maximum flow rate of 750 L/min (200 gal/min) or less,

(c) 5 L (1 gal) on meters with a rated maximum flow of 375 L/min (100 gal/min) or more used for jet fuel aviation refueling systems, or
(Added 2006)

(d) 5 L (1 gal) on other meters.
(Amended 1989, 1994 and 2006)

S.1.1.4. Advancement of Indicating and Recording Elements. - Primary indicating and recording elements shall be susceptible to advancement only by the mechanical operation of the meter. However, a meter may be cleared by advancing its elements to zero, but only if:

(a) the advancing movement, once started, cannot be stopped until zero is reached, or

(b) in the case of indicating elements only, such elements are automatically obscured until the elements reach the correct zero position.

S.1.1.5. Return to Zero. - Primary indicating elements shall be readily returnable to a definite zero indication. Means shall be provided to prevent the return of primary indicating elements, and of primary recording elements if these are returnable to zero, beyond their correct zero position.

S.1.2. Graduations.

S.1.2.1. Length. - Graduations shall be so varied in length that they may be conveniently read.

S.1.2.2. Width. - In any series of graduations, the width of a graduation shall in no case be greater than the width of the minimum clear interval between graduations, and the width of main graduations shall be not more than 50 percent greater than the width of subordinate graduations. Graduations shall in no case be less than 0.2 mm (0.008 in) wide.

S.1.2.3. Clear Interval Between Graduations. - The clear interval shall be not less than 0.25 mm (0.10 in). If the graduations are not parallel, the measurement shall be made:

(a) along the line of relative movement between the graduations at the end of the indicator, or

(b) if the indicator is continuous, at the point of widest separation of the graduations.
(Amended 1986)

S.1.3. Indicators.

S.1.3.1. Symmetry. - The index of an indicator shall be symmetrical with respect to the graduations at least throughout that portion of its length associated with the graduations.

S.1.3.2. Length. - The index of an indicator shall reach to the finest graduations with which it is used, unless the indicator and the graduations are in the same plane, in which case the distance between the end of the indicator and the ends of the graduations, measured along the line of the graduations, shall be not more than 1.0 mm (0.04 in).

S.1.3.3. Width. - The width of the index of an indicator in relation to the series of graduations with which it is used shall be not greater than:

(a) the width of the narrowest graduation, and [*Nonretroactive as of January 1, 2002]*
(Amended 2001)

(b) the width of the minimum clear interval between graduations.

When the index of an indicator extends along the entire length of a graduation, that portion of the index of the indicator that may be brought into coincidence with the graduation shall be of the same width throughout the length of the index that coincides with the graduation.

S.1.3.4. Clearance. - The clearance between the index of an indicator and the graduations shall in no case be more than 1.5 mm (0.06 in).

S.1.3.5. Parallax. - Parallax effects shall be reduced to the practicable minimum.

S.1.3.6. Travel of Indicator. - If the most sensitive element of the primary indicating element utilizes an indicator and graduations, the relative movement of these parts corresponding to the smallest indicated value shall not be less than 5 mm (0.20 in).

S.1.4. Computing-Type Device.

S.1.4.1. Display of Unit Price. - In a device of the computing type, means shall be provided for displaying, in a manner clear to the operator and an observer, the unit price at which the device is set to compute. The unit price is not required to be displayed continuously.
(Amended 1983 and 2005)

S.1.4.2. Printed Ticket. - If a computing-type device issues a printed ticket which displays the total computed price, the ticket shall also have printed clearly thereon the total quantity of the delivery, the appropriate fraction of the quantity, and the price per unit of quantity.
(Amended 1989)

S.1.4.3. Money-Value Computations. - Money-value computations shall be of the full-computing type in which the money value at a single unit price, or at each of a series of unit prices, shall be computed for every delivery within either the range of measurement of the device or the range of the computing elements, whichever is less. Value graduations shall be supplied and shall be accurately positioned. The value of each graduated interval shall be 1 cent. On electronic devices with digital indications, the total price may be computed on the basis of the quantity indicated when the value of the smallest division indicated is equal to or less than 0.2 L (0.1 gal) or 0.2 kg (1 lb).
(Amended 1979, 1989)

S.1.4.4. Money Values, Mathematical Agreement. - Any digital money-value indication and any recorded money value on a computing-type device shall be in mathematical agreement with its associated quantity indication or representation to within 1 cent of money value.

S.2. Design of Measuring Elements.

S.2.1. Vapor Elimination. - A metering system shall be equipped with an effective vapor or air eliminator or other automatic means to prevent the passage of vapor and air through the meter. Vent lines from the air or vapor eliminator shall be made of metal tubing or some other suitable rigid material.
(Amended 1993)

S.2.2. Provision for Sealing. - Adequate provision shall be made for an approved means of security (e.g., data change audit trail or for physically applying a security seal in such a manner that requires the security seal to be broken before a change or an adjustment or interchange may be made of:

(a) any measuring or indicating element,

(b) any adjustable element for controlling delivery rate when such rate tends to affect the accuracy of deliveries, and

(c) any metrological parameter that will affect the metrological integrity of the device or system.

When applicable, the adjusting mechanism shall be readily accessible for purposes of affixing a security seal.

*[Audit trails shall use the format set forth in Table S.2.2.]**
*[*Nonretroactive as of January 1, 1995]*
(Amended 2006)

S.2.2.1. Milk-Metering Systems. - Adequate provision shall be made for applying security seals to the adjustment mechanism and the register. The adjusting mechanism shall be readily accessible for purposes of affixing a security seal.

S.2.3. Directional Flow Valves. - Valves intended to prevent reversal of flow shall be automatic in operation. However, on equipment used exclusively for fueling aircraft, such valves may be manual in operation.

S.2.4. Zero-Set-Back Interlock, Vehicle-Tank Meters, Electronic. *- Except for vehicle-mounted metering systems used solely for the delivery of aviation fuel, a device shall be so constructed that after an individual or multiple deliveries at one location have been completed, an automatic interlock system shall engage to prevent a subsequent delivery until the indicating and, if equipped, recording elements have been returned to their zero position. For individual deliveries, if there is no product flow for 3 minutes the transaction must be completed before additional product flow is allowed. The 3-minute timeout shall be a sealable feature on an indicator.*
[Nonretroactive as of January 1, 2006]
(Added 2005)

Table S.2.2. Categories of Device and Methods of Sealing

Category of Device	***Method of Sealing***
Category 1: No remote configuration capability.	*Seal by physical seal or two event counters: one for calibration parameters and one for configuration parameters.*
Category 2: Remote configuration capability, but access is controlled by physical hardware. *The device shall clearly indicate that it is in the remote configuration mode and record such message if capable of printing in this mode or shall not operate while in this mode.*	*The hardware enabling access for remote communication must be on-site. The hardware must be sealed using a physical seal or an event counter for calibration parameters and an event counter for configuration parameters. The event counters may be located either at the individual measuring device or at the system controller; however, an adequate number of counters must be provided to monitor the calibration and configuration parameters of the individual devices at a location. If the counters are located in the system controller rather than at the individual device, means must be provided to generate a hard copy of the information through an on-site device.*
Category 3: Remote configuration capability access may be unlimited or controlled through a software switch (e.g., password). *The device shall clearly indicate that it is in the remote configuration mode and record such message if capable of printing in this mode or shall not operate while in this mode.*	*An event logger is required in the device; it must include an event counter (000 to 999), the parameter ID, the date and time of the change, and the new value of the parameter. A printed copy of the information must be available through the device or through another on-site device. The event logger shall have a capacity to retain records equal to ten times the number of sealable parameters in the device, but not more than 1000 records are required. (**Note:** Does not require 1000 changes to be stored for each parameter.)*

[Nonretroactive as of January 1, 1995]
(Table Added 2006)

S.2.5. Automatic Temperature Compensation for Refined Petroleum Products.

S2.5.1. Automatic Temperature Compensation for Refined Petroleum Products. - A device may be equipped with an automatic means for adjusting the indication and registration of the measured volume of product to the volume at 15 °C for liters or the volume at 60 °F for gallons and decimal subdivisions or fractional equivalents thereof where not prohibited by state law.

S2.5.2. Provision for Deactivating. - On a device equipped with an automatic temperature-compensating mechanism that will indicate or record only in terms of liters compensated to 15 °C or gallons compensated to 60 °F, provision shall be made for deactivating the automatic temperature-compensating mechanism so the meter can indicate and record, if it is equipped to record, in terms of the uncompensated volume.

S.2.5.3. Gross and Net Indications. - A device equipped with automatic temperature compensation shall indicate or record, if equipped to record, both the gross (uncompensated) and net (compensated) volume for testing purposes. It is not necessary that both net and gross volume be displayed simultaneously.

S.2.5.4 Provision for Sealing Automatic Temperature-Compensating Systems. – Adequate provision shall be made for an approved means of security (e.g., data change audit trail) or physically applying security seals in such a manner that an automatic temperature-compensating system cannot be disconnected and no adjustment may be made to the system.

S.2.5.5. Temperature Determination with Automatic Temperature Compensation. – For test purposes, means shall be provided (e.g., thermometer well) to determine the temperature of the liquid either:

(a) in the liquid chamber of the meter, or

(b) immediately adjacent to the meter inlet or discharge line
(Added 2007)

S.3. Design of Discharge Lines and Discharge Line Valves. (Not applicable to milk-metering systems.)

S.3.1. Diversion of Measured Liquid. - Except on equipment used exclusively for fueling aircraft, no means shall be provided by which any measured liquid can be diverted from the measuring chamber of the meter or the discharge line therefrom. However, two or more delivery outlets may be installed if means is provided to insure that:

(a) liquid can flow from only one such outlet at one time, and

(b) the direction of flow for which the mechanism may be set at any time is definitely and conspicuously indicated.

S.3.2. Pump-Discharge Unit. - On a pump-discharge unit, the discharge hose shall be of the wet-hose type with a shutoff valve at its outlet end. However, a pump-discharge unit may be equipped also with a dry hose without a shutoff valve at its outlet end, but only if:

(a) the dry hose is as short as practicable, and

(b) there is incorporated in the discharge piping, immediately adjacent to the meter, effective means to insure that liquid can flow through only one of the discharge hoses at any one time and that the meter and the wet hose remain full of liquid at all times.

S.3.3. Gravity-Discharge Unit. - On a gravity-discharge unit, the discharge hose or equivalent pipe shall be of the dry-hose type with no shutoff valve at its outlet end. The dry hose shall be of such stiffness and only of such length as to facilitate its drainage. The inlet end of the hose or of an equivalent outlet pipe shall be of such height as to provide for proper drainage of the hose or pipe. There shall be incorporated an automatic vacuum breaker or equivalent means to prevent siphoning and to insure the rapid and complete drainage.

S.3.4. Discharge Hose. - A discharge hose shall be adequately reinforced.

S.3.5. Discharge Valve. - A discharge valve may be installed in the discharge line only if the device is of the wet-hose type, in which case such valve shall be at the discharge end of the line. Any other shutoff valve on the discharge side of the meter shall be of the automatic or semiautomatic predetermined-stop type or shall be operable only:

(a) by means of a tool (but not a pin) entirely separate from the device, or

(b) by mutilation of a security seal with which the valve is sealed open.

S.3.6. Antidrain Valve. - In a wet-hose, pressure-type device, an effective antidrain valve shall be incorporated in the discharge valve or immediately adjacent thereto. The antidrain valve shall function so as to prevent the drainage of the discharge hose. However, a device used exclusively for fueling and defueling aircraft may be of the pressure type without an antidrain valve.

S.4. Design of Intake Lines (for Milk-Metering Systems).

S.4.1. Diversion of Liquid to be Measured. - No means shall be provided by which any liquid can be diverted from the supply tank to the receiving tank without being measured by the device.

S.4.2. Intake Hose. - The intake hose shall be:

(a) of the dry-hose type;

(b) adequately reinforced;

(c) not more than 6 m (20 ft) in length, unless it can be demonstrated that a longer hose is essential to permit pickups from a supply tank; and

(d) connected to the pump at horizontal or above, to permit complete drainage of the hose.

S.5. Marking Requirements

S.5.1. Limitation of Use. - If a meter is intended to measure accurately only liquids having particular properties, or to measure accurately only under specific installation or operating conditions, or to measure accurately only when used in conjunction with specific accessory equipment, these limitations shall be clearly and permanently stated on the meter.

S.5.2. Discharge Rates. - A meter shall be marked to show its designed maximum and minimum discharge rates. However, the minimum discharge rate shall not exceed 20% of the maximum discharge rate.

Note: See example in Section 3.30. Liquid-Measuring Devices Code, paragraph S.4.4.1.
(Added 2003)

S.5.3. Measuring Components Milk-Metering System. All components that affect the measurement of milk that are disassembled for cleaning purposes shall be clearly and permanently identified with a common serial number.

S.5.4. Flood Volume, Milk-Metering System. - When applicable, the volume of product necessary to flood the system when dry shall be clearly, conspicuously, and permanently marked on the air eliminator.

S.5.5. Conversion Factor. - When the conversion factor of 1.03 kg/L (8.6 lb/gal) is used to convert the volume of milk to weight, the conversion factor shall be clearly marked on the primary indicating element and recorded on the delivery ticket.
(Added 1989)

S.5.6. Temperature Compensation for Refined Petroleum Products. – If a device is equipped with an automatic temperature compensator, the primary indicating elements, recording elements, and recorded representations shall be clearly and conspicuously marked to show the volume delivered has been adjusted to the volume at 15 °C for liters or the volume at 60 °F for gallons and decimal subdivisions or fractional equivalents thereof.
(Added 2007)

N. Notes

N.1. Test Liquid.

(a) A measuring system shall be tested with the liquid to be commercially measured or with a liquid of the same general physical characteristics. Following a satisfactory examination, the weights and measures official should attach a seal or tag indicating the product used during the test.
(Amended 1975)

(b) A milk measuring system shall be tested with the type of milk to be measured when the accuracy of the system is affected by the characteristics of milk (e.g., positive displacement meters).
(Amended 1989)

N.2. Evaporation and Volume Change. - Care shall be exercised to reduce to a minimum, evaporation losses and volume changes resulting from changes in temperature of the test liquid.

N.3. Test Drafts. - Test drafts should be equal to at least the amount delivered by the device in 1 minute at its maximum discharge rate, and shall in no case be less than 180 L (50 gal) or 225 kg (500 lb).
(Amended 1989)

N.4. Testing Procedures

N.4.1. Normal Tests. - The "normal" test of a measuring system shall be made at the maximum discharge rate that may be anticipated under the conditions of the installation. Any additional tests conducted at flow rates down to and including one-half of the sum of the maximum discharge flow rate and the rated minimum discharge flow rate shall be considered normal tests.
(Amended 1992)

N.4.1.1. Milk Measuring System. - The "normal" test shall include a determination of the effectiveness of the air elimination system.

N.4.1.2. Repeatability Tests. - Tests for repeatability should include a minimum of three consecutive test drafts of approximately the same size and be conducted under controlled conditions where variations in factors such as, temperature pressure and flow rate are reduced to the extent that they will not affect the results obtained.
(Added 2001)

N.4.1.3. Automatic Temperature-Compensating Systems for Refined Petroleum Products. - On devices equipped with automatic temperature-compensating systems, normal tests shall be conducted:

(a) by comparing the compensated volume indicated or recorded to the actual delivered volume corrected to 15 °C for liters or 60 °F for gallons and decimal subdivisions or fractional equivalents thereof; and

(b) with the temperature-compensating system deactivated, comparing the uncompensated volume indicated or recorded to the actual delivered volume.

The first test shall be performed with the automatic temperature-compensating system operating in the "as-found" condition. On devices that indicate or record both the compensated and uncompensated volume for each delivery, the tests in (a) and (b) may be performed as a single test.
(Added 2007)

N.4.2. Special Tests (Except Milk-Measuring Systems). "Special" tests shall be made to develop the operating characteristics of a measuring system and any special elements and accessories attached to or associated with the device. Any test except as set forth in N.4.1. and N.4.5. shall be considered a special test. Special test of a measuring system shall be made at a minimum discharge rate of 20% of the marked maximum discharge rate or at the minimum discharge rate marked on the device whichever is less.
(Amended 1978 and 2005)

N.4.3. Antidrain Valve Test. - The effectiveness of the antidrain valve shall be tested after the pump pressure in the measuring system has been released and a valve between the supply tank and the discharge valve is closed.

N.4.4. System Capacity. - The test of a milk-measuring system shall include the verification of the volume of product necessary to flood the system as marked on the air eliminator.

N.4.5. Product Depletion Test. - Except for vehicle-mounted metering systems used solely for the delivery of aviation fuel, the effectiveness of the vapor eliminator or vapor elimination means shall be tested by dispensing product at the normal flow rate until the product supply is depleted and continuing until the lack of fluid causes the meter indication to stop completely for at least 10 seconds. If the meter indication fails to stop completely for at least 10 seconds, continue to operate the system for 3 minutes. Finish the test by switching to another compartment with sufficient product to complete the test on a multi-compartment vehicle or by adding sufficient product to complete the test to a single compartment vehicle. When adding product to a single compartment vehicle, allow appropriate time for any entrapped vapor to disperse before continuing the test. Test drafts shall be of the same size and run at approximately the same flow rate.
(Added 2005)

N.5. Temperature Correction for Refined Petroleum Products. - Corrections shall be made for any changes in volume resulting from the differences in liquid temperatures between the time of passage through the meter and the time of volumetric determination in the prover. When adjustments are necessary, appropriate petroleum measurement tables should be used.
(Added 2007)

T. Tolerances

T.1. Application.

T.1.1. To Underregistration and to Overregistration. The tolerances hereinafter prescribed shall be applied to errors of underregistration and errors of overregistration.

T.2. Tolerance Values. – Tolerances shall be as shown in Tables 1 and 2.
(Amended 1995, 2002 and 2006)

T.2.1. Automatic Temperature-Compensating Systems. - The difference between the meter error (expressed as a percentage) for results determined with and without the automatic temperature-compensating system activated shall not exceed:

(a) 0.4% for mechanical automatic temperature-compensating systems; and
(b) 0.2% for electronic automatic temperature compensating systems.

The delivered quantities for each test shall be approximately the same size. The results of each test shall be within the applicable acceptance or maintenance tolerance.
(Added 2007)

T.3. Repeatability. - When multiple tests are conducted at approximately the same flow rate and draft size, the range of the test results for the flow rate shall not exceed 40 percent absolute value of the maintenance tolerance and the results of each test shall be within the applicable tolerance. See also N.4.1.2.
(Added 1992) (Amended 2001 and 2002)

Table 1. Tolerances for Vehicle-Tank Meter Accuracy Classes Covered in NIST Handbook 44, Section 3.31					
Accuracy Class	**Application**		**Acceptance Tolerance**	**Maintenance Tolerance**	**Special Test Tolerance**
0.3	-Petroleum products including large capacity motor fuel devices (flow rates over 115 L/min (30 gpm))**, -Heated products at or greater than 50 °C -Asphalt at or below temperatures 50 °C -All other liquids not shown in the table where the typical delivery is greater than 200 L (50 gal).		0.15 %	0.3 %	0.45 %
0.3A	-Asphalt at temperatures greater than 50 °C.		0.3 %	0.3 %	0.5 %
0.5*	-Petroleum products delivered from small capacity (at 4 L/min (1 gpm) through 115 L/min or 30 gpm)** motor-fuel devices -Agri-chemical liquids -All other applications not shown in the table where typical delivery is ≤200L (50 gal).		0.3 %	0.5 %	0.5 %
1.1	-Petroleum products and other normal liquids from devices with flow rates** less than 4 L/min (1 gpm) and -Devices designed to deliver less than 4 L (1 gal).		0.75 %	1.0 %	1.25 %
1.5	-Water	Overregistration	1.5 %	1.5 %	1.5 %
		Underregistration	1.5 %	1.5 %	5.0 %

* For 5-gal and 10-gal test drafts, the tolerances specified for Accuracy Class 0.5 in the table above do not apply. For these test drafts, the maintenance tolerances on normal and special tests for 5-gal and 10-gal test drafts are 6 in³ and 11 in³, respectively. Acceptance tolerances on normal and special tests are 3 in³ and 5.5 in³.

** Flow rate refers to designed or marked maximum flow rate.

(Added 2002)

Table 2. Tolerances for Vehicle-Mounted Milk Meters		
Indication	Maintenance	Acceptance
gallons	gallons	gallons
100	0.5	0.3
200	0.7	0.4
300	0.9	0.5
400	1.1	0.6
500	1.3	0.7
Over 500	Add 0.002 gallon per indicated gallon over 500	Add 0.001 gallon per Indicated gallon over 500

(Added 1989)

T.4. Product Depletion Test. - The difference between the test result for any normal test and the product depletion test shall not exceed the tolerance shown in Table T.4. Test drafts shall be of the same size and run at approximately the same flow rate.
(Amended 2006)

[**Note:** The result of the product depletion test may fall outside of the applicable test tolerance as specified in Table T.2.]
(Added 2005)

Table T.4. Tolerances for Vehicle-Tank Meters on Product Depletion Tests, Except Milk Meters	
Meter Size	**Maintenance and Acceptance Tolerances**
Up to but not including 50 mm (2 in)	1.70 L (104 in^3)[1]
From 50 mm (2 in) up to but not including 75 mm (3 in)	2.25 L (137 in^3)[1]
75 mm (3 in) or larger	3.75 L (229 in^3)[1]
[1] Based on a test volume of at least the amount specified in N.3.	

(Table Added 2005)

UR. User Requirements

UR.1. Installation Requirements.

UR.1.1. Discharge Rate. - A meter shall be so installed that the actual maximum discharge rate will not exceed the rated maximum discharge rate. If necessary, means for flow regulation shall be incorporated in the installation, in which case this shall be fully effective and automatic in operation.

UR.1.2. Unit Price. - There shall be displayed on the face of a device of the computing type the unit price at which the device is set to compute.

UR.1.3. Intake Hose. - The intake hose in a milk-metering system shall be installed to permit complete drainage and ensure that all available product is measured following each pickup.

UR.1.4. Liquid Measured. – A vehicle-tank meter shall continue to be used to measure the same liquid or one with the same general physical properties as that used for calibration and weights and measures approval unless the meter is recalibrated with a different product and tested by a registered service agency or a weights and measures official and approved by the weights and measures jurisdiction having statutory authority over the device.
(Added 2003)

UR.2. Use Requirements.

UR.2.1. Return of Indicating and Recording Elements to Zero. - The primary indicating elements (visual), and the primary recording elements, when these are returnable to zero, shall be returned to zero immediately before each delivery is begun and after the pump has been activated and the product to be measured has been supplied to the measuring system.
(Amended 1981)

UR.2.2. Ticket Printer; Customer Ticket.
[NOT ADOPTED]

Section 4002.3. Vehicle-Tank Meters. (3.31.)

UR.2.2. Ticket Printer; Customer Ticket. Vehicle-mounted metering systems shall be equipped with a ticket printer which shall be used for all sales where product is delivered through the meter. A copy of the ticket issued by the device shall be left with the customer at the time of delivery or as otherwise specified by the customer.

[Nonretroactive as of January 1, 1995.]

UR.2.2.1. Exceptions for the Sale of Aviation Fuel. - The provisions of UR.2.2. Ticket Printer; Customer Ticket shall not apply to vehicle-mounted metering systems used solely for the delivery of aviation fuel into aircraft and for aircraft-related operations.
(Added 1999) (Amended 2005)

UR.2.3. Ticket in Printing Device. - A ticket shall not be inserted into a device equipped with a ticket printer until immediately before a delivery is begun, and in no case shall a ticket be in the device when the vehicle is in motion while on a public street, highway, or thoroughfare.

UR.2.4. Credit for Flood Volume. - The volume of product necessary to flood the system as marked on the air eliminator shall be individually recorded on the pickup ticket of each seller affected.

UR.2.5. Automatic Temperature Compensation for Refined Petroleum Products.

UR.2.5.1. When to be Used. - In a state that does not prohibit, by law or regulation, the sale of temperature-compensated product, a device equipped with an operable automatic-temperature compensator shall be connected, operable, and in use at all times. An electronic or mechanical automatic temperature-compensating system may not be removed, nor may a compensated device be replaced with an umcompensated device, without the written approval of the responsible weights and measures jurisdiction.

Note: This requirement does not specify the method of sale for products measured through a meter.

UR.2.5.2. Invoices. - An invoice based on a reading of a device that is equipped with an automatic temperature compensator shall show that the volume delivered has been adjusted to the volume at 15 °C for liters or the volume at 60 °F for gallons and decimal subdivisions or fractional equivalents thereof.
(Added 2007)

Sec. 3.32. Liquefied Petroleum Gas and Anhydrous Ammonia Liquid-Measuring Devices[1]

A. Application.

A.1. - This code applies to devices used for the measurement of liquefied petroleum gas and anhydrous ammonia in the liquid state, whether such devices are installed in a permanent location or mounted on a vehicle.

A.2. - Insofar as they are clearly appropriate, the requirements and provisions of the code may be applied to devices used for the measurement of other liquids that do not remain in a liquid state at atmospheric pressures and temperatures.

A.3. - See also Sec. 1.10; General Code requirements.

A.4. - This code does not apply to mass flow meters (see Sec. 3.37. Code for Mass Flow Meters).
(Added 1994)

S. Specifications

S.1. Design of Indicating and Recording Elements and of Recorded Representations.

S.1.1. Primary Elements

S.1.1.1. General. - A device shall be equipped with a primary indicating element and may also be equipped with a primary recording element.

[Note: Vehicle-mounted metering systems shall be equipped with a ticket printer as required by paragraph UR.2.6.]

S.1.1.2. Units. - A device shall indicate, and record if the device is equipped to record, its deliveries in terms of liters, gallons, quarts, pints, or binary-submultiple or decimal subdivisions of the liter or gallon.
(Amended 1987 and 2006)

S.1.1.3. Value of Smallest Unit. - The value of the smallest unit of indicated delivery, and recorded delivery if the device is equipped to record, shall not exceed the equivalent of:

(a) 0.5 L (1 pt) on retail devices, or

(b) 5 L (1 gal) on wholesale devices.
(Amended 1987)

S.1.1.4. Advancement of Indicating and Recording Elements. - Primary indicating and recording elements shall be susceptible to advancement only by the mechanical operation of the device. However, a device may be cleared by advancing its elements to zero, but only if:

(a) the advancing movement, once started, cannot be stopped until zero is reached, or

(b) in the case of indicating elements only, such elements are automatically obscured until the elements reach the correct zero position.

S.1.1.5. Money Values--Mathematical Agreement. Any digital money-value indication and any recorded money value on a computing-type device shall be in mathematical agreement with its associated quantity indication or representation to within one cent of money value; except that a stationary retail computing-type device must compute and indicate to the nearest 1 cent of money value (see Sec. 1.10., G-S.5.5.).
(Amended 1984, 1988)

S.1.1.6. Printed Ticket. - Any printed ticket issued by a device of the computing type on which there is printed the total computed price, shall have printed clearly thereon the total volume of the delivery in terms of liters or gallons, and the appropriate decimal fraction of the liter or gallon, and the corresponding price per liter or gallon.
(Added 1979; Amended 1987)

S.1.2. Graduations.

S.1.2.1. Length. - Graduations shall be so varied in length that they may be conveniently read.

[1]Title amended 1986.

S.1.2.2. Width. - In any series of graduations, the width of a graduation shall in no case be greater then the width of the minimum clear interval between graduations, and the width of main graduations shall be not more than 50 percent greater than the width of subordinate graduations. Graduations shall in no case be less than 0.2 mm (0.008 in) width.

S.1.2.3. Clear Interval Between Graduations. - The clear interval shall be not less than 1.0 mm (0.04 in). If the graduations are not parallel, the measurement shall be made:

(a) along the line of relative movement between the graduations at the end of the indicator, or

(b) if the indicator is continuous, at the point of widest separation of the graduations.

S.1.3. Indicators.

S.1.3.1. Symmetry. - The index of an indicator shall be symmetrical with respect to the graduations, at least throughout that portion of its length associated with the graduations.

S.1.3.2. Length. - The index of an indicator shall reach to the finest graduations with which it is used, unless the indicator and the graduations are in the same plane, in which case the distance between the end of the indicator and the ends of the graduations, measured along the line of graduations, shall be not more than 1.0 mm (0.04 in).

S.1.3.3. Width. - The width of the index of an indicator in relation to the series of graduations with which it is used shall be not greater than:

(a) the width of the narrowest graduation, and*
*[*Nonretroactive as of January 1, 2002]*
(Amended 2001)

(b) the width of the minimum clear interval between graduations.

When the index of an indicator extends along the entire length of a graduation, that portion of the index of the indicator that may be brought into coincidence with the graduation shall be of the same width throughout the length of the index that coincides with the graduation.

S.1.3.4. Clearance. - The clearance between the index of an indicator and the graduations shall in no case be more than 1.5 mm (0.06 in).

S.1.3.5. Parallax. - Parallax effects shall be reduced to the practicable minimum.

S.1.4. For Retail Devices Only.

S.1.4.1. Indication of Delivery. - A retail device shall be constructed to show automatically its initial zero condition and the amounts delivered up to the nominal capacity of the device.

S.1.4.2. Return to Zero.

(a) Primary indicating elements shall be readily returnable to a definite zero indication.

(b) Primary recording elements on a stationary retail device shall be readily returnable to a definite zero indication if the device is equipped to record.

(c) Means shall be provided to prevent the return of primary indicating elements, and of primary recording elements if these are returnable to zero, beyond their correct zero position.

(Amended 1990)

S.1.5. For Stationary Retail Devices Only.

S.1.5.1. Display of Unit Price and Product Identity - In a device of the computing type, means shall be provided for displaying on each face of the device the unit price at which the device is set to compute or to deliver as the case may be, and there shall be conspicuously displayed on each side of the device the identity of the product that is being dispensed. If a device is so designed as to dispense more than one grade, brand, blend, or mixture of product, the identity of the grade, brand, blend, or mixture being dispensed shall also be displayed on each face of the device.

S.1.5.2. Money-Value Computations. - A computing device shall compute the total sales price at any single-purchase unit price (excluding fleet sales and other price contract sales) for which the product is offered for sale at any delivery possible within either the measurement range of the device or the range of the computing elements, whichever is less. The analog money value indication shall not differ from the mathe-matically computed money value (quantity x unit price = sales price), for any delivered quantity, by an amount greater than the values shown in Table 1.
(Amended 1995)

Table 1.
Money-Value Divisions and
Maximum Allowable Variations for Money-Value
Computations on Mechanical Analog Computers

Unit Price		Money Value Division	Maximum Allowable Variation	
From	To and Including		Design Test	Field Test
0	0.25/liter or $1.00/gallon	1¢	± 1¢	± 1¢
0.25/liter or $1.00/gallon	0.75/liter or $3.00/gallon	1¢ or 2¢	± 1¢	± 2¢
0.75/liter or $3.00/gallon	2.50/liter or $10.00/gallon	1¢ or 2¢	± 1¢	± 2¢
0.75/liter or $3.00/gallon	2.50/liter or $10.00/gallon	5¢	± 2-1/2¢	± 5¢

S.1.5.2.1. Money-Value Divisions, Analog. The value of the graduated intervals representing money values on a computing-type device with analog indications shall be as follows:

(a) Not more than 1 cent at all unit prices up to and including $0.25 per liter or $1.00 per gallon.

(b) Not more than 2 cents at unit prices greater than $0.25 per liter or $1.00 per gallon up to and including $0.75 per liter or $3.00 per gallon.

(c) Not more than 5 cents at all unit prices greater than $0.75 per liter or $3.00 per gallon.

(Amended 1984)

S.1.5.2.2. Money-Value Divisions, Digital. - A computing-type device with digital indications shall comply with the requirements of paragraph G-S.5.5., Money Values, Mathematical Agreement, and the total price computation shall be based on quantities not exceeding 0.01-gallon intervals for devices indicating in inch-pound units and 0.05 liter for devices indicating in metric units.

S.1.5.2.3. Money-Value Divisions, Auxiliary Indications. *- In a system equipped with auxiliary indications, all indicated money-value divisions shall be identical.*
[Nonretroactive as of January 1, 1985.]

S.1.6. For Wholesale Devices Only.

S.1.6.1. Travel of Indicator. - A wholesale device shall be readily operable to deliver accurately any quantity from 180 L (50 gal) to the capacity of the device. If the most sensitive element of the indicating system utilizes an indicator and graduations, the relative movement of these parts corresponding to a delivery of 5 L (1 gal) shall be not less than 5 mm (0.20 in).
(Amended 1987)

S.2. Design of Measuring Elements.

S.2.1. Vapor Elimination. - A device shall be equipped with an effective vapor eliminator or other effective means to prevent the passage of vapor through the meter.

S.2.2. Provision for Sealing. - Adequate provision shall be made for an approved means of security (e.g., data change audit trail) or for physically applying a security seal in such a manner that requires the security seal to be broken before an adjustment or interchange may be made of:

(a) any measuring or indicating element;

(b) any adjustable element for controlling delivery rate, when such rate tends to affect the accuracy of deliveries, and

(c) any metrological parameter that will affect the metrological integrity of the device or system.

When applicable, the adjusting mechanism shall be readily accessible for purposes of affixing a security seal.

*[Audit trails shall use the format set forth in Table S.2.2.]**
*[*Nonretroactive as of January 1, 1995]*
(Amended 2006)

Table S.2.2. Categories of Device and Methods of Sealing	
Category of Device	***Method of Sealing***
Category 1: No remote configuration capability.	*Seal by physical seal or two event counters: one for calibration parameters and one for configuration parameters.*
Category 2: Remote configuration capability, but access is controlled by physical hardware. *The device shall clearly indicate that it is in the remote configuration mode and record such message if capable of printing in this mode or shall not operate while in this mode.*	*The hardware enabling access for remote communication must be on-site. The hardware must be sealed using a physical seal or an event counter for calibration parameters and an event counter for configuration parameters. The event counters may be located either at the individual measuring device or at the system controller; however, an adequate number of counters must be provided to monitor the calibration and configuration parameters of the individual devices at a location. If the counters are located in the system controller rather than at the individual device, means must be provided to generate a hard copy of the information through an on-site device.*
Category 3: Remote configuration capability access may be unlimited or controlled through a software switch (e.g., password). *The device shall clearly indicate that it is in the remote configuration mode and record such message if capable of printing in this mode or shall not operate while in this mode.*	*An event logger is required in the device; it must include an event counter (000 to 999), the parameter ID, the date and time of the change, and the new value of the parameter. A printed copy of the information must be available through the device or through another on-site device. The event logger shall have a capacity to retain records equal to ten times the number of sealable parameters in the device, but not more than 1000 records are required. (**Note:** Does not require 1000 changes to be stored for each parameter.)*

[Nonretroactive as of January 1, 1995]
(Table Added 2006)

S.2.3. Directional Flow Valves. - A measuring system shall be equipped with a valve or other effective means, automatic in operation and installed in or adjacent to the measuring element, to prevent reversal of flow of the product being measured.
(Amended 1982).

S.2.4. Maintenance of Liquid State. - A device shall be so designed and installed that the product being measured will remain in a liquid state during the passage through the meter.

S.2.5. Thermometer Well. - For test purposes, means shall be provided to determine the temperature of the liquid either:

(a) in the liquid chamber of the meter, or

(b) in the meter inlet or discharge line and immediately adjacent to the meter.

(Amended 1987)

S.2.6. Automatic Temperature Compensation.
[NOT ADOPTED]

4002.4. Liquefied Petroleum Gas and Anhydrous Ammonia Liquid-Measuring Devices. (3.32.)

(a) Temperature Compensation. All liquefied petroleum gas measuring devices with a manufacturer's maximum rated flow capacity exceeding 20 gallons per minute shall be equipped with automatic means to correct the volume delivered to the volume at 60 °F. The automatic temperature compensator shall be connected, operable and in use at all times.

S.2.6.1. Provision for Deactivating. - On a device equipped with an automatic temperature compensating mechanism that will indicate or record only in terms of liters compensated to 15 °C or gallons to 60 °F, provision shall be made to facilitate the deactivation of the automatic temperature compensating mechanism so that the meter may indicate, and record if it is equipped to record, in terms of the uncompensated volume.
(Amended 1972)

S.2.6.2. Provision for Sealing. - Provision shall be made for applying security seals in such a manner that an automatic temperature compensating system cannot be disconnected and that no adjustment may be made to the system.

S.3. Design of Discharge Lines and Discharge Line Valves.

S.3.1. Diversion of Measured Liquid. - No means shall be provided by which any measured liquid can be diverted from the measuring chamber of the meter or the discharge line therefrom. However, two or more delivery outlets may be permanently installed if means are provided to insure that:

(a) liquid can flow from only one such outlet at one time, and
(b) the direction of flow for which the mechanism may be set at any time is definitely and conspicuously indicated.

In addition, a manually controlled outlet that may be opened for the purpose of emptying a portion of the system to allow for repair and maintenance operations shall be permitted. Effective means shall be provided to prevent the passage of liquid through any such outlet during normal operation of the device and to indicate clearly and unmistakably when the valve controls are so set as to permit passage of liquid through such outlet.
(Amended 1975)

4002.4. Liquefied Petroleum Gas and Anhydrous Ammonia Liquid-Measuring Devices. (3.32.)

(b) The provisions of Handbook 44, Section 3.32., S.3.1. Liquefied Petroleum Gas and Anhydrous Ammonia Liquid-Measuring Devices Code shall not apply to equipment located at wholesale loading terminals when used exclusively for the purpose of filling transports utilizing the spray fill, or when the delivery is being made simultaneously to truck and trailer from one meter when the product being delivered into the truck and trailer is being purchased by the same person.

S.3.2. Delivery Hose. - The delivery hose of a retail device shall be of the wet-hose type with a shutoff valve at its outlet end.

S.4. Marking Requirements.

S.4.1. Limitation of Use. - If a device is intended to measure accurately only products having particular properties, or to measure accurately only under specific installation or operating conditions, or to measure accurately only when used in conjunction with specific accessory equipment, these limitations shall be clearly and permanently stated on the device.

S.4.2. Discharge Rates. - A device shall be marked to show its designed maximum and minimum discharge rates. The marked minimum discharge rate shall not exceed:

(a) 20 L (5 gal) per minute for stationary retail devices, or

(b) 20% of the marked maximum discharge rate for other retail devices and for wholesale devices.

(Amended 1987)

Note: See example in Section 3.30. Liquid-Measuring Devices Code, paragraph S.4.4.1.
(Added 2003)

S.4.3. Location of Marking Information; Retail Motor-Fuel Dispensers. - *The marking information required in General Code, Paragraph G-S.1. Identification shall appear as follows:*

(a) within 60 cm (24 in) to 150 cm (60 in) from the base of the dispenser;

(b) either internally and/or externally provided the information is permanent and easily read; and

(c) on a portion of the device that cannot be readily removed or interchanged (i.e., not on a service access panel).

Note: The use of a dispenser key or tool to access internal marking information is permitted for retail motor-fuel dispensers.
[Nonretroactive as of January 1, 2003]
(Added 2006)

S.4.4. Temperature Compensation. - If a device is equipped with an automatic temperature compensator, the primary indicating elements, recording elements, and recorded representation shall be clearly and conspicuously marked to show that the volume delivered has been adjusted to the volume at 15 °C (60 °F).

N. Notes

N.1. Test Liquid. - A device shall be tested with the liquid to be commercially measured or with a liquid of the same general physical characteristics.

N.2. Vaporization and Volume Change. - Care shall be exercised to reduce to a minimum, vaporization and volume changes.

N.3. Test Drafts. - Test drafts should be equal to at least the amount delivered by the device in 1 minute at its normal discharge rate.
(Amended 1982)

N.4. Testing Procedures.

N.4.1. Normal Tests. - The "normal" test of a device shall be made at the maximum discharge flow rate developed under the conditions of the installation. Any additional tests conducted at flow rates down to and including one-half the sum of the maximum discharge flow rate and the rated minimum discharge flow rate shall be considered normal tests.
(Amended 1998)

N.4.1.1. Automatic Temperature Compensation.

[NOT ADOPTED]

4002.4. Liquefied Petroleum Gas and Anhydrous Ammonia Liquid-Measuring Devices. (3.32.)

(c) Wholesale Devices Equipped With Automatic Temperature Compensating Systems. On wholesale devices equipped with automatic temperature compensating systems, normal tests:

(1) Shall be conducted with the temperature compensating system connected and operating by comparing the compensated volume indicated or recorded to the actual delivered volume corrected to 60 °F; and

(2) May be conducted with the temperature compensating system deactivated, comparing the uncompensated volume indicated or recorded to the actual delivered volume.

The first test shall be performed with the automatic temperature compensating system operating in the "as found" condition. On devices that indicate or record both the compensated and uncompensated volume for each delivery, the tests in (1) and (2) may be performed as a single test.

N.4.1.2. Repeatability Tests. - Tests for repeatability should include a minimum of three consecutive test drafts of approximately the same size and be conducted under controlled conditions where variations in factors such as, temperature pressure and flow rate are reduced to the extent that they will not affect the results obtained
(Added 2001)

N.4.2. Special Tests. - "Special" tests shall be made to develop the operating characteristics of a device and any special elements and accessories attached to or associated with the device. Any test except as set forth in N.4.1. shall be considered a special test.
(Amended 2005)

N.4.2.1. For Motor-Fuel Devices. - A motor-fuel device shall be so tested at a minimum discharge rate of:

(a) 20 L (5 gal) per minute, or

(b) the minimum discharge rate marked on the device, whichever is less.

N.4.2.2. For Other Retail Devices. - A retail device other than a motor-fuel device shall be tested at a minimum discharge rate of:

(a) the minimum discharge rate that can be developed under the conditions of installation, or

(b) the minimum discharge rate marked on the device, whichever is greater.
(Amended 1973)

N.4.2.3. For Wholesale Devices. - A wholesale device shall be so tested at a minimum discharge rate of:

(a) 40 L (10 gal) per minute for a device with a rated maximum discharge less than 180 L (50 gal) per minute.

(b) 20 percent of the marked maximum discharge rate for a device with a rated maximum discharge of 180 L (50 gal) per minute or more, or

(c) the minimum discharge rate marked on the device, whichever is least.
(Amended 1987)

N.4.3. Money-Value Computation Tests.

N.4.3.1. Laboratory Design Evaluation Tests. - In the conduct of laboratory design evaluation tests, compliance with paragraph S.1.5.2. shall be determined by using the cone gear as a reference for the total quantity delivered. The indicated delivered quantity shall agree with the cone gear representation with the index of the indicator within the width of the graduation. The maximum allowable variation of the indicated sales price shall be as shown in Table 1.

N.4.3.2. Field Tests. - In the conduct of field tests to determine compliance with paragraph S.1.5.2. the maximum allowable variation in the indicated sales price shall be as shown in Table 1.
(Added 1984)

N.5. Temperature Correction. - Adjustments shall be made for any changes in volume resulting from the differences in liquid temperatures between time of passage through the meter and time of volumetric determination in the prover. When adjustments are necessary, appropriate measurement tables should be used.

T. Tolerances

T.1. Application.

T.1.1. To Underregistration and to Overregistration. The tolerances hereinafter prescribed shall be applied to errors of underregistration and errors of overregistration, whether or not a device is equipped with an automatic temperature compensator.

T.2. Tolerance Values. - The maintenance and acceptance tolerances for normal and special tests shall be as shown in Table T.2.
(Amended 1988, 1992 and 2003)

T.3. Repeatability. - When multiple tests are conducted at approximately the same flow rate and draft size, the range of the test results for the flow rate shall not exceed 40 percent of the absolute value of the maintenance tolerance and the results of each test shall be within applicable tolerance. This tolerance does not apply to the test of the automatic temperature compensating system. See also N.4.1.2.
(Added 1992) (Amended 1997 and 2001)

T.4. Automatic Temperature Compensating Systems. - The difference between the meter error (expressed as a percentage) for results determined with and without the automatic temperature compensating system activated shall not exceed:

(a) 1.0 percent for mechanical automatic temperature compensating systems; and

(b) 0.5 percent for electronic automatic temperature compensating systems.

The delivered quantities for each test shall be approximately the same size. The results of each test shall be within the applicable acceptance or maintenance tolerance.
(Added 1991) (Amended 1992, 1996, and 1997)

UR. User Requirements

UR.1. Installation Requirements.

UR.1.1. Discharge Rate. - A device shall be so installed that the actual maximum discharge rate will not exceed the rated maximum discharge rate. If necessary, means for flow regulation shall be incorporated in the installation, in which case this shall be fully effective and automatic in operation.

UR.1.2. Length of Discharge Hose. - The length of the discharge hose on a stationary motor-fuel device shall not exceed 5.5 m (18 ft), measured from the outside of the housing of the device to the inlet end of the discharge nozzle, unless it can be demonstrated that a longer hose is essential to permit deliveries to be made to receiving vehicles or vessels. Unnecessarily remote location of a device shall not be accepted as justification for an abnormally long hose.
(Amended 1991)

UR.2. Use Requirements.

UR.2.1. Return of Indication and Recording Elements to Zero. - The primary indicating elements (visual), and the primary recording elements when these are returnable to zero, shall be returned to zero before each delivery.

Table T.2. Accuracy Classes and Tolerance for LPG and Anhydrous Ammonia Liquid-Measuring Devices

Accuracy Class	Application	Acceptance Tolerance	Maintenance Tolerance	Special Test Tolerance
1.0	Anhydrous ammonia, LPG (including vehicle-mounted meters)	0.6%	1.0%	1.0%

(Added 2003) (Amended 2006)

UR.2.2. Condition of Fill of Discharge Hose. - The discharge hose shall be completely filled with liquid before the "zero" condition is established prior to the start of a commercial delivery, whether this condition is established by resetting the primary indicating elements to zero indication or by recording the indications of the primary indicating elements. (Also see UR.2.1.)

UR.2.3. Vapor-Return Line.

[NOT ADOPTED]

4002.4. Liquefied Petroleum Gas and Anhydrous Ammonia Liquid-Measuring Devices. (3.32.)

(d) Vapor-Return Line. During any metered delivery of liquefied petroleum gas from a supplier's tank to a receiving container, there shall be no vapor-return line from the receiving container to the supplier's tank.

UR.2.4. Temperature Compensation.

UR.2.4.1. Use of Automatic Temperature Compensators. - If a device is equipped with an automatic temperature compensator, this shall be connected, operable, and in use at all times. Such automatic temperature compensator may not be removed, nor may a compensated device be replaced with an uncompensated device, without the written approval of the weights and measures authority having jurisdiction over the device.

UR.2.4.2. Temperature Compensated Sale. - All sales of liquefied petroleum gas in a liquid state, when the quantity is determined by an approved measuring system equipped with a temperature compensating mechanism, or by weight and converted to liters or gallons, or by a calibrated container, shall be in terms of liters at 15 °C or the United States gallon of 231 in^3 at 60 °F.
(Added 1984)

UR.2.4.3. Invoices. - Any invoice based on a reading of a device that is equipped with an automatic temperature compensator or based on a weight converted to gallons, or based on the volume of a calibrated container, shall have shown thereon that the volume delivered has been adjusted to the volume at 15 °C (60 °F).
(Amended 1984)

UR.2.4.4. Automated Temperature-Compensating Systems. - Means for determining the temperature of measured liquid in an automatic temperature-compensating system shall be so designed and located that, in any "usual and customary" use of the system, the resulting indications and/or recorded representations are within applicable tolerances.
(Added 1987)

UR.2.5. Ticket in Printing Device. - A ticket shall not be inserted into a device equipped with a ticket printer until immediately before a delivery is begun, and in no case shall a ticket be in the device when the vehicle is in motion while on a public street, highway, or thoroughfare.

UR.2.6. Ticket Printer; Customer Ticket. - Vehicle-mounted metering systems shall be equipped with a ticket printer. The ticket printer shall be used for all sales; a copy of the ticket issued by the device shall be left with the customer at the time of delivery or as otherwise specified by the customer.
(Added 1992) (Amended 2006)

4002.4. Liquefied Petroleum Gas and Anhydrous Ammonia Liquid-Measuring Devices. (3.32.)

(e) Signs. Any retail liquefied petroleum gas dispenser, with the exception of those mounted on a motor vehicle, shall display a sign showing the price schedule of all transactions. The sign shall be where it is plainly discernable to the customer. All letters, figures or numerals used to express the price schedule shall be at least three-quarters of an inch in height.

Sec. 3.33. Hydrocarbon Gas Vapor-Measuring Devices[1]

A. Application

A.1. - This code applies to devices used for the measurement of hydrocarbon gas in the vapor state, such as propane, propylene, butanes, butylenes, ethane, methane, natural gas and any other hydrocarbon gas/air mix.
(Amended 1984, 1986, 1988, 1991)

A.2. - This code does not apply to:

(a) Liquid-measuring devices used for dispensing liquefied petroleum gases in liquid form (for which see Sec. 3.32; Code for Liquefied Petroleum Gas and Anhydrous Ammonia Liquid-Measuring Devices).

(b) Natural, liquefied petroleum, and manufactured-gas-vapor meters when these are operated in a public utility system.

(c) Mass flow meters (see Sec. 3.37. Code for Mass Flow Meters).
(Added 1994)

A.3. - See also Sec. 1.10; General Code requirements.

S. Specifications

S.1. Design of Indicating and Recording Elements and of Recorded Representations.

S.1.1. Primary Elements.

S.1.1.1. General. - A device shall be equipped with a primary indicating element and may also be equipped with a primary recording element.

S.1.1.2. Units. - A volume-measuring device shall indicate, and record if equipped to record, its deliveries in terms of cubic meters or cubic feet, or multiple or decimal subdivisions of cubic meters or cubic feet.
(Amended 1972, 1991)

S.1.1.3. Value of Smallest Unit. - Volume-Measuring Devices: The value of the smallest unit of indicated delivery, and recorded delivery if the device is equipped to record, shall not exceed:

(a) 1 m^3 (1 000 dm^3) (100 ft^3) when the maximum rated gas capacity is less than 100 m^3/h (10 000 ft^3/h);

(b) 10 m^3 (1 000 ft^3) when the maximum rated gas capacity is 280 m^3/h (10 000 ft^3/h) up to but not including 1 700 m^3/h (60 000 ft^3/h);

(c) 100 m^3 (10 000 ft^3) when the maximum rated gas capacity is 1 700 m^3/h (60 000 ft^3/h) or more.
(Amended 1972, 1988, 1991)

S.1.1.4. Advancement of Indicating and Recording Elements. - Primary indicating and recording elements shall advance digitally or continuously and be susceptible to advancement only by the mechanical operation of the device.

S.1.1.5. Proving Indicator. - Devices rated less than 280 m^3/h (10 000 ft^3/h) gas capacity shall be equipped with a proving indicator measuring 0.025, 0.05, 0.1, 0.2, or 0.25 m^3 per revolution, (1, 2, 5, or 10 ft^3 per revolution) for testing the meter. Devices with larger capacities shall be equipped as follows:

(a) Devices rated 280 m^3 (10 000 ft^3) up to but not including 1 700 m^3/h (60 000 ft^3/h) gas capacity shall be equipped with a proving indicator measuring not greater than 1 m^3 (100 ft^3) per revolution.

(b) Devices rated 1 700 m^3/h (60 000 ft^3/h) gas capacity or more shall be equipped with a proving indicator measuring not more than 10 m^3 (1 000 ft^3) per revolution.

The test circle of the proving indicator shall be divided into 10 equal parts. Additional subdivisions of one or more of such equal parts may be made.
(Amended 1973 and 1988)

S.1.2. Graduations.

S.1.2.1. Length. - Graduations shall be so varied in length that they may be conveniently read.

S.1.2.2. Width. - In any series of graduations, the width of a graduation shall in no case be greater than the width of the minimum clear interval between graduations, and in no case should it exceed 1.0 mm (0.04 in) for indicating elements and 0.5 mm (0.02 in) for proving circles.

[1] Title changed 1986.

S.1.2.3. Clear Interval Between Graduations. - The clear interval shall be not less than 1.0 mm (0.04 in). If the graduations are not parallel, the measurement shall be made:

(a) along the line of relative movement between the graduations at the end of the indicator, or

(b) if the indicator is continuous, at the point of widest separation of the graduations.

S.1.3. Indicators.

S.1.3.1. Symmetry. - The index of an indicator shall be symmetrical with respect to the graduations, at least throughout that portion of its length associated with the graduations.

S.1.3.2. Length. - The index of an indicator shall reach to the finest graduations with which it is used.

S.1.3.3. Width. - The width of the index of an indicator in relation to the series of graduations with which it is used shall be not greater than:

(a) the width of the widest graduation, and

(b) the width of the minimum clear interval between graduations.

When the index of an indicator extends along the entire length of a graduation, that portion of the index of the indicator that may be brought into coincidence with the graduation shall be of the same width throughout the length of the index that coincides with the graduation.

S.1.3.4. Clearance. - The clearance between the index of an indicator and the graduations shall in no case be more than 1.5 mm (0.06 in).

S.1.3.5. Parallax. - Parallax effects shall be reduced to the practicable minimum.

S.2. Design of Measuring Elements.

S.2.1. Pressure Regulation. - Except when measured as a retail motor fuel, the vapor should be measured at a normal gauge pressure (psig) of:
(Amended 1991)

(a) 2 740 Pa ±685 Pa (11 in of water column [(0.40 psig) ±2.75 in of water column (0.10 psig)] for liquefied petroleum gas vapor; or

(b) 1 744 Pa ±436 Pa [7 in of water column (0.25 psig) ±1.75 in of water column (0.06 psig)] for natural and manufactured gas.

When vapor is measured at a pressure other than what is specified above for the specific product, a volume multiplier shall be applied within the meter or to the billing invoice based on the following equation:

$$VPM = \frac{AAP + GP}{AAP + NGP}$$

Where

VPM = Volume pressure multiplier
AAP = Assumed atmospheric pressure in psia
GP = Gauge pressure in pascal or psig
NGP = Normal gauge pressure in pascal or psig

The assumed atmospheric pressure is to be taken from Tables 2 and 2M.

When liquefied petroleum gas vapor is measured at a pressure of 6 900 Pa (1 psig) or more, the delivery pressure shall be maintained within ±1 725 Pa ±0.25 psig).

Pressure variations due to regulator lock off shall not increase the operating pressure by more than 25%.
(Amended 1980, 1984, 1991)

S.2.2. Provision for Sealing. - Adequate provision shall be made for applying security seals in such a manner that no adjustment or interchange may be made of any measurement element.
(Amended 2006)

S.2.3. Maintenance of Vapor State. - A device shall be so designed and installed that the product being measured will remain in a vapor state during passage through the meter.

S.2.4. Automatic Temperature Compensation. - A device may be equipped with an adjustable automatic means for adjusting the indication and registration of the measured volume of vapor product to the volume at 15 °C (60 °F).

S.3. Design of Discharge Lines

S.3.1. Diversion of Measured Vapor. - No means shall be provided by which any measured vapor can be diverted from the measuring chamber of the meter or the discharge line therefrom.

S.4. Marking Requirements.

S.4.1. Limitations of Use. - If a device is intended to measure accurately only products having particular properties, or to measure accurately only under specific installation or operating conditions, or to measure accurately only when used in conjunction with specific accessory equipment, these limitations shall be clearly and permanently stated on the device.

S.4.2. Discharge Rates. - A volume-measuring device shall be marked to show its rated gas capacity in cubic meters per hour or cubic feet per hour.
(Amended 1973, 1991)

S.4.3. Temperature Compensation.
[NOT ADOPTED]

4002.5. Hydrocarbon Gas Vapor-Measuring Devices. (3.33.)

(b) Temperature Compensation. - If a device is equipped with an automatic temperature compensator, this shall be indicated on the badge or immediately adjacent to the badge of the device and on the register.

S.4.4. Badge. - A badge affixed in a prominent position on the front of the device shall show the manufacturer's name, serial number and model number of the device, and capacity rate of the device for the particular products that it was designed to meter as recommended by the manufacturer.

N. Notes

N.1. Test Medium. - The device shall be tested with air or the product to be measured.
(Amended 1991)

N.2. Temperature and Volume Change. - Care should be exercised to reduce to a minimum any volume changes. The temperature of the air, bell-prover oil, and the meters under test should be within 1 °C (2 °F) of one another. The devices should remain in the proving room for at least 16 hours before starting any proving operations to allow the device temperature to approximate the temperature of the proving device.

N.3. Test Drafts. - Except for low-flame tests, test drafts shall be at least equal to one complete revolution of the largest capacity proving indicator, and shall in no case be less than 0.05 m^3 or 2 ft^3. All flow rates shall be controlled by suitable outlet orifices.
(Amended 1973 and 1990)

N.4. Test Procedures. - If a device is equipped with an automatic temperature compensator, the proving device reading shall be corrected to 15 °C (60 °F), using an approved table.
(Amended 1972)

N.4.1. Normal Tests. - The normal test of a device shall be made at a rate not to exceed the capacity rate given on the badge of the meter.
(Amended 1988)

N.4.1.1. Automatic Temperature Compensation. If a device is equipped with an automatic temperature compensator, the quantity of the test draft indication of the standard shall be corrected to 15 °C (60 °F).

N.4.1.2. Repeatability Tests. – Tests for repeatability should include a minimum of three consecutive test drafts of approximately the same size and be conducted under controlled conditions where variations in factors, such as temperature pressure, and flow rate are reduced to the extent that they will not affect the results obtained.
(Added 2002)

N.4.2. Special Tests. - "Special" tests shall be made to develop the operating characteristics of a device and any special elements and accessories attached to or associated with the device. Any test except as set forth in N.4.1. shall be considered a special test.
(Amended 2005)

N.4.2.1. Slow Test. - The device shall be tested at a rate not less than 20 percent of the marked capacity rate, or (at the check rate) not less than the minimum flow rate if marked on the device, whichever is less.
(Amended 1988)

N.4.2.2. Low-Flame Test. - The device shall be tested at an extremely low-flow rate as given in Table 1. The test shall consist of passing air at a pressure of 375 Pa (1.5 in water column) through the meter for not less than 60 minutes. The meter shall continue to advance at the conclusion of the test period.
(Amended 1990, 1991)

N.4.2.3. Pressure Regulation Test. - On devices operating at a pressure of 6 900 Pa (1 psig) or more, a pressure regulation test shall be made at both the minimum and maximum use load to determine the proper operation of the regulator and the proper sizing of the piping and dispensing equipment. These tests may include a test of 24 hours during which the pressure is recorded.
(Added 1984)

Table 1. Capacity of Low-Flow Test Rate Orifices With Respect to Device Capacity			
Metric Units		Inch-Pound Units	
Rated Capacity	Low-Flow Test Rate	Rated Capacity	Low-Flow Test Rate
Up to and including 7 m^3/h	0.007 m^3/h	Up to and including 250 ft^3/h	0.25 ft^3/h
Over 7 m^3/h up to and including 14 m^3/h	0.014 m^3/h	Over 250 ft^3/h up to and including 500 ft^3/h	0.50 ft^3/h
Over 14 m^3/h	0.1% of capacity rate	Over 500 ft^3/h	0.1% of capacity rate

(Amended 1973)

N.5. Temperature Correction. - Corrections shall be made for any changes in volume resulting from the difference in air temperatures between time of passage through the device and time of volumetric determination in the proving device.

N.6. Frequency of Test. - A hydrocarbon gas vapor-measuring device shall be tested before installation and allowed to remain in service for 10 years from the time last tested without being retested, unless a test is requested by:

(a) the purchaser of the product being metered,

(b) the seller of the product being metered, or

(c) the weights and measures official.

4002.5. Hydrocarbon Gas Vapor-Measuring Devices. (3.33.)

(a) Leak Test. Each meter shall be submitted to a pressure leak test not to exceed the manufacturer's maximum rated pressure.

T. Tolerances

T.1. Tolerance Values on Normal Tests and on Special Tests Other Than Low-Flame Tests. - Maintenance and acceptance tolerances for normal and special tests for hydrocarbon gas vapor-measuring devices shall be as shown in Table T.1.
(Amended 1981 and 2003)

T.2. Repeatability – When multiple tests are conducted at approximately the same flow rate and draft size, the range of the test results for the flow rate shall not exceed 0.9% and the results of each test shall be within the applicable tolerance. *See also N.4.1.2.*
(Added 2002)

UR. User Requirements

UR.1. Installation Requirements.

UR.1.1. Capacity Rate. - A device shall be so installed that the actual maximum flow rate will not exceed the capacity rate except for short durations. If necessary, means for flow regulation shall be incorporated in the installation, in which case this shall be fully effective and automatic in operation.

Table T.1. Accuracy Classes and Tolerances for Hydrocarbon Gas Vapor-Measuring Devices				
Accuracy Class	Application		Acceptance Tolerance	Maintenance Tolerance
3.0	Gases at low pressure (for example, LPG vapor)	Overregistration	1.5%	1.5%
		Underregistration	3.0%	3.0%

(Added 2003)

UR.1.2. Leakage. - The metering system shall be installed and maintained as a pressure-tight and leak-free system.

UR.2. Use Requirements.

UR.2.1. Automatic Temperature Compensation. - A compensated device may not be replaced with an uncompensated device without the written approval of the weights and measures authority having jurisdiction over the device.

UR.2.2. Invoices. - A customer purchasing hydrocarbon gas measured by a vapor meter for other than motor fuel shall receive from the seller an invoice for each billing period. The invoice shall clearly and separately show the following:

(a) The opening and closing meter readings and the dates of those readings.

(b) The altitude correction factor.

(c) The total cubic meters (cubic feet) billed, corrected for elevation.

(d) The charge per cubic meter (cubic foot) after correction for elevation.

(e) All periodic charges independent of the measured gas, such as meter charges, meter reading fees, service charges or a minimum charge for a minimum number of cubic meters (cubic feet).

(f) The total charge for the billing period.

If the vapor meter is equipped with an automatic temperature compensator, or any other means are used to compensate for temperature, the invoice shall show that the volume has been adjusted to the volume at 15 °C (60 °F).
(Amended 1988, 1991)

UR.2.3. Correction for Elevation. - The metered volume of gas shall be corrected for changes in the atmospheric pressure with respect to elevation to the standard pressure of 14.73 lb psia. The appropriate altitude correction factor from Table 2M or 2 shall be used. (The table is modified from NIST Handbook 117.)
(Amended 1988)

Elevation correction factors (ACF) were obtained by using the following equation:

$$\text{ACF} = \frac{\text{GP of gas} + \text{AAP}}{\text{base pressure}}$$

where

GP = gauge pressure
AAP = assumed atmospheric pressure
base pressure = 101.560 kPa = 14.73 psia

2740 Pa = 11 in of water column = 0.397 psig

1744 Pa = 7 in of water column = 0.253 psig
(Added 1988)

UR.2.4. Valves and Test Tee. - *All gas meter installations shall be provided with a shut-off valve located adjacent to and on the inlet side of the meter. In the case of a single meter installation utilizing a liquefied petroleum gas tank, the tank service valve may be used in lieu of the shut-off valve. All gas meter installations shall be provided with a test tee located adjacent to and on the outlet side of the meter.*
[Nonretroactive as of January 1, 1990.]
(Added 1989)

UR.2.5. Use of Auxiliary Heated Vaporizer Systems. Automatic temperature compensation shall be used on hydrocarbon gas vapor meters equipped with an auxiliary heated vaporizer system unless there is sufficient length of underground piping to provide gas at a uniform temperature to the meter inlet. When required by weights and measures officials, a thermometer well (appropriately protected against freezing) shall be installed immediately up-stream of the meter.
(Added 1990)

4002.5. Hydrocarbon Gas Vapor-Measuring Devices. (3.33.)

(c) Retention of Customer Invoices. Any person engaging in the sale of hydrocarbon gas vapor shall retain a record of:

(1) each individual hydrocarbon gas vapor meter billing invoice, and
(2) the applicable rate schedule for a period of not less than 12 months and shall make them available at reasonable times for inspection and copying by the customer and the county sealer of weights and measures.

Table 2M. Corrections for Altitude, Metric Units

Elevation (meters)				Altitude Correction Factor		Assumed Atmospheric Pressure	Assumed Atmospheric Pressure Plus Gauge Pressure	
				2.74 kPa Gauge Pressure	1.74 kPa Gauge Pressure	(kPa)	2.74 kPa Gauge Pressure	1.74 kPa Gauge Pressure
	-50	to	120	1.02	1.01	100.85	103.59	102.58
above	120	to	300	1.00	0.99	98.82	101.56	100.54
above	300	to	470	0.98	0.97	96.79	99.53	98.51
above	470	to	650	0.96	0.95	94.76	97.50	96.48
above	650	to	830	0.94	0.93	92.73	95.47	94.45
above	830	to	1020	0.92	0.91	90.70	93.44	92.42
above	1020	to	1210	0.90	0.89	88.66	91.40	90.39
above	1210	to	1400	0.88	0.87	86.63	89.37	88.36
above	1400	to	1590	0.86	0.85	84.60	87.34	86.33
above	1590	to	1790	0.84	0.83	82.57	85.31	84.29
above	1790	to	2000	0.82	0.81	80.54	83.28	82.26
above	2000	to	2210	0.80	0.79	78.51	81.25	80.23
above	2210	to	2420	0.78	0.77	76.48	79.22	78.20
above	2420	to	2640	0.76	0.75	74.45	77.19	76.17
above	2640	to	2860	0.74	0.73	72.41	75.15	74.15
above	2860	to	3080	0.72	0.71	70.38	73.12	72.12
above	3080	to	3320	0.70	0.69	68.35	71.09	70.08
above	3320	to	3560	0.68	0.67	66.32	69.06	68.05
above	3560	to	3800	0.66	0.65	64.29	67.03	66.01
above	3800	to	4050	0.64	0.63	62.26	65.00	63.98
above	4050	to	4310	0.62	0.61	60.23	62.97	61.95
above	4310	to	4580	0.60	0.59	58.20	60.94	59.92

Table 2. Corrections for Altitude, Inch-Pound Units

Elevation (feet)				Altitude Correction Factor		Assumed Atmospheric Pressure	Assumed Atmospheric Pressure Plus Gauge Pressure	
				11 inch WC	7 inch WC	(psia)	11 inch WC (psia)	7 inch WC (psia)
	-150	to	400	1.02	1.01	14.64	15.04	14.89
above	400	to	950	1.00	0.99	14.35	14.74	14.60
above	950	to	1550	0.98	0.97	14.05	14.45	14.30
above	1550	to	2100	0.96	0.95	13.76	14.15	14.01
above	2100	to	2700	0.94	0.93	13.46	13.86	13.71
above	2700	to	3300	0.92	0.91	13.17	13.56	13.42
above	3300	to	3950	0.90	0.89	12.87	13.27	13.12
above	3950	to	4550	0.88	0.87	12.58	12.97	12.83
above	4550	to	5200	0.86	0.85	12.28	12.68	12.53
above	5200	to	5850	0.84	0.83	11.99	12.38	12.24
above	5850	to	6500	0.82	0.81	11.69	12.09	11.94
above	6500	to	7200	0.80	0.79	11.40	11.79	11.65
above	7200	to	7900	0.78	0.77	11.10	11.50	11.35
above	7900	to	8600	0.76	0.75	10.81	11.20	11.06
above	8600	to	9350	0.74	0.73	10.51	10.91	10.76
above	9350	to	10 100	0.72	0.71	10.22	10.61	10.47
above	10 100	to	10 850	0.70	0.69	9.92	10.32	10.17
above	10 850	to	11 650	0.68	0.67	9.63	10.03	9.88
above	11 650	to	12 450	0.66	0.65	9.33	9.73	9.58
above	12 450	to	13 250	0.64	0.63	9.04	9.44	9.29
above	13 250	to	14 100	0.62	0.61	8.75	9.14	9.00
above	14 100	to	14 950	0.60	0.59	8.45	8.85	8.70

[THIS PAGE LEFT INTENTIONALLY BLANK]

Sec. 3.34. Cryogenic Liquid-Measuring Devices

A. Application

A.1. - This code applies to devices used for the measurement of cryogenic liquids such as, but not limited to oxygen, nitrogen, hydrogen, and argon.
(Amended 1986 and 1995)

A.2. - This code does not apply to the following:

(a) Devices used for dispensing liquefied petroleum gases (for which see Sec. 3.32; Code for Liquefied Petroleum Gas and Anhydrous Ammonia Liquid-Measuring Devices).

(b) Devices used solely for dispensing a product in connection with operations in which the amount dispensed does not affect customer charges.

(c) Devices used solely for dispensing liquefied natural gas.

(d) Mass flow meters (see Sec. 3.37. Code for Mass Flow Meters).
(Added 1994)

A.3. - See also Sec. 1.10; General Code requirements.

S. Specifications

S.1. Design of Indicating and Recording Elements and of Recorded Representations.

S.1.1. Primary Elements.

S.1.1.1. General. - A device shall be equipped with a primary indicating element and may also be equipped with a primary recording element.

S.1.1.2. Units. - A device shall indicate and record, if equipped to record, its deliveries in terms of: kilograms or pounds; liters or gallons of liquid at the normal boiling point of the specific cryogenic product; cubic meters (cubic feet) of gas at a normal temperature of 21 °C (70 °F) and an absolute pressure of 101.325 kPa (14.696 psia); or decimal subdivisions or multiples of the measured units cited above.
(Amended 1997 and 2002)

S.1.1.3. Value of Smallest Unit. - The value of the smallest unit of indicated delivery, and recorded delivery, if the device is equipped to record, shall not exceed the equivalent of:

(a) for small delivery devices

(1) 1 L
(2) 0.1 gal
(3) 1 kg
(4) 1 lb
(5) 0.1 m^3 of gas
(6) 10 cubic feet of gas

(b) for large delivery devices

(1) 10 L
(2) 1 gal
(3) 10 kg
(4) 10 lb
(5) 1 m^3 of gas
(6) 100 ft^3 of gas

(Amended 1997 and 2002)

S.1.1.4. Advancement of Indicating and Recording Elements. - Primary indicating and recording elements shall be susceptible to advancement only by the normal operation of the device. However, a device may be cleared by advancing its elements to zero, but only if:

(a) the advancing movement, once started, cannot be stopped until zero is reached, or

(b) in the case of indicating elements only, such elements are automatically obscured until the elements reach the correct zero position.

S.1.1.5. Return to Zero. - Primary indicating and recording elements shall be readily returnable to a definite zero indication. Means shall be provided to prevent the return of primary indicating elements and of primary recording elements beyond their correct zero position.

S.1.2. Graduations.

S.1.2.1. Length. - Graduations shall be so varied in length that they may be conveniently read.

S.1.2.2. Width. - In any series of graduations, the width of a graduation shall in no case be greater than the width of the minimum clear interval between graduations, and the width of main graduations shall be not more than 50 percent greater than the width of subordinate graduations. Graduations shall in no case be less than 0.2 mm (0.008 in) in width.

S.1.2.3. Clear Interval Between Graduations. - The clear interval shall be no less than 1.0 mm (0.04 in). If the graduations are not parallel, the measurement shall be made:

(a) along the line of relative movement between the graduations at the end of the indicator, or

(b) if the indicator is continuous, at the point of widest separation of the graduations. (See also S.1.3.6.)

S.1.3. Indicators.

S.1.3.1. Symmetry. - The index of an indicator shall be symmetrical with respect to the graduations, at least throughout that portion of its length associated with the graduations.

S.1.3.2. Length. - The index of an indicator shall reach to the finest graduations with which it is used, unless the indicator and the graduations are in the same plane, in which case the distance between the end of the indicator and the ends of the graduations, measured along the line of the graduations, shall be not more than 1.0 mm (0.04 in).

S.1.3.3. Width. - The width of the index of an indicator in relation to the series of graduations with which it is used shall be not greater than:

(a) *the width of the narrowest graduation*, and [*Nonretroactive as of January 1, 2002]* (Amended 2001)

(b) the width of the minimum clear interval between graduations.

When the index of an indicator extends along the entire length of a graduation, that portion of the index of the indicator that may be brought into coincidence with the graduation shall be of the same width throughout the length of the index that coincides with the graduation.

S.1.3.4. Clearance. - The clearance between the index of an indicator and the graduations shall in no case be more than 1.5 mm (0.06 in).

S.1.3.5. Parallax. - Parallax effect shall be reduced to the practicable minimum.

S.1.3.6. Travel of Indicator. - If the most sensitive element of the primary indicating element utilizes an indicator and graduations, the relative movement of these parts corresponding to the smallest indicated value shall be not less than 0.5 mm (0.20 in).

S.1.4. Computing-Type Device.

S.1.4.1. Printed Ticket. - Any printed ticket issued by a device of the computing type on which there is printed the total computed price shall have printed clearly thereon also the total quantity of the delivery and the price per unit.

S.1.4.2. Money-Value Computations. - Money-value computations shall be of the full-computing type in which the money value at a single unit price, or at each of a series of unit prices, shall be computed for every delivery within either the range of measurement of the device or the range of the computing elements, whichever is less. Value graduations shall be supplied and shall be accurately positioned. The total price shall be computed on the basis of the quantity indicated when the value of the smallest division indicated is equal to or less than the values specified in S.1.1.3.

S.1.4.3. Money-Values - Mathematical Agreement. Any digital money-value indication and any recorded money value on a computing type device shall be in mathematical agreement with its associated quantity indication or representa-tion to within one cent of money value.

S.2. Design of Measuring Elements.

S.2.1. Vapor Elimination. - A measuring system shall be equipped with an effective vapor eliminator or other effective means to prevent the measurement of vapor that will cause errors in excess of the applicable tolerances. (See Sec. T.)

S.2.2. Directional Flow Valves. - A valve or valves or other effective means, automatic in operation, to prevent the reversal of flow shall be installed in or adjacent to the measuring device.
(Amended 1978)

S.2.3. Maintenance of Liquid State. - A device shall be so designed that the product being measured will remain in a liquid state during passage through the device.

S.2.4. Automatic Temperature or Density Compensation. - A device shall be equipped with automatic means for adjusting the indication and/or recorded representation of the measured quantity of the product, to indicate and/or record in terms of: kilograms or pounds; or liters or gallons of liquid at the normal boiling point of the specific cryogenic product; or the equivalent cubic meters (cubic feet) of gas at a normal temperature of 21 °C (70 °F) and an absolute pressure of 101.325 kPa (14.696 lb/in^2 absolute). *When a compensator system malfunctions, the indicating and recording elements may*

*indicate and record in uncompensated volume if the mode of operation is clearly indicated, e.g., by a marked annunciator, recorded statement, or other obvious means.**
*[*Nonretroactive as of January 1, 1992.]*
(Amended 1991 and 2002)

S.2.5. Provision for Sealing. - Adequate provision shall be made for an approved means of security (e.g., data change audit trail) or for physically applying a security seal in such a manner that requires the security seal to be broken before an adjustment or interchange may be made of:

(a) any measuring or indicating element,

(b) any adjustable element for controlling delivery rate when such rate tends to affect the accuracy of deliveries,

(c) any automatic temperature or density compensating system, and

(d) any metrological parameter that will affect the metrological integrity of the device or system.

When applicable, any adjusting mechanism shall be readily accessible for purposes of affixing a security seal.

*[Audit trails shall use the format set forth in Table S.2.5.]**
*[*Nonretroactive as of January 1, 1995]*
(Amended 2006)

S.3. Design of Discharge Lines and Discharge Line Valves.

S.3.1. Diversion of Measured Liquid. - No means shall be provided by which any measured liquid can be diverted from the measuring chamber of the device or the discharge line therefrom, except that a manually controlled outlet that may be opened for purging or draining the measuring system shall be permitted. Effective means shall be provided to prevent the passage of liquid through any such outlet during normal operation of the device and to indicate clearly and unmistakably when the valve controls are so set as to permit passage of liquid through such outlet.

S.3.2. Discharge Hose. - The discharge hose of a measuring system shall be of the completely draining dry-hose type.

Table S.2.5. Categories of Device and Methods of Sealing

Category of Device	Method of Sealing
Category 1: No remote configuration capability.	*Seal by physical seal or two event counters: one for calibration parameters and one for configuration parameters.*
Category 2: Remote configuration capability, but access is controlled by physical hardware. *The device shall clearly indicate that it is in the remote configuration mode and record such message if capable of printing in this mode or shall not operate while in this mode.*	*The hardware enabling access for remote communication must be on-site. The hardware must be sealed using a physical seal or an event counter for calibration parameters and an event counter for configuration parameters. The event counters may be located either at the individual measuring device or at the system controller; however, an adequate number of counters must be provided to monitor the calibration and configuration parameters of the individual devices at a location. If the counters are located in the system controller rather than at the individual device, means must be provided to generate a hard copy of the information through an on-site device.*
Category 3: Remote configuration capability access may be unlimited or controlled through a software switch (e.g., password). *The device shall clearly indicate that it is in the remote configuration mode and record such message if capable of printing in this mode or shall not operate while in this mode.*	*An event logger is required in the device; it must include an event counter (000 to 999), the parameter ID, the date and time of the change, and the new value of the parameter. A printed copy of the information must be available through the device or through another on-site device. The event logger shall have a capacity to retain records equal to ten times the number of sealable parameters in the device, but not more than 1000 records are required. (**Note:** Does not require 1000 changes to be stored for each parameter.)*

[Nonretroactive as of January 1, 1995]
(Table Added 2006)

S.4. Level Condition, On-Board Weighing Systems. - Provision shall be made for automatically inhibiting the delivery of a cryogenic liquid when the vehicle is out-of-level beyond the limit required for the performance to be within applicable tolerance.
(Added 1986)

S.5. Marking Requirements.

S.5.1. Limitation of Use. - If a measuring system is intended to measure accurately only liquids having particular properties, or to measure accurately only under specific installation or operating conditions, or to measure accurately only when used in conjunction with specific accessory equipment, these limitations shall be clearly and permanently marked on the device.

S.5.2. Discharge Rates. - A meter shall be marked to show its designed maximum and minimum discharge rates.

S.5.3. Temperature or Density Compensation. - Devices equipped with an automatic temperature or density compensator, shall be clearly and conspicuously marked on the primary indicating elements, recording elements, and recorded representations to show that the quantity delivered has been adjusted to the conditions specified in S.2.4.

N. Notes

N.1. Test Liquid. - A meter shall be tested with the liquid to be commercially measured except that, in a type evaluation examination, nitrogen may be used.

N.2. Vaporization and Volume Change. - Care shall be exercised to reduce to a minimum vaporization and volume changes. When testing by weight, the weigh tank and transfer systems shall be precooled to liquid temperature prior to the start of the test to avoid the venting of vapor from the vessel being weighed.

N.3. Test Drafts.

N.3.1. Gravimetric Test. - Weight test drafts shall be equal to at least the amount delivered by the device in two minutes at its maximum discharge rate, and shall in no case be less than 907 kg (2 000 lb).

N.3.2. Transfer Standard Test. - When comparing a meter with a calibrated transfer standard, the test draft shall be equal to at least the amount delivered by the device in two minutes at its maximum discharge rate, and shall in no case be less than 180 L (50 gal) or equivalent thereof. When testing uncompensated volumetric meters in a continuous recycle mode, appropriate corrections shall be applied if product conditions are abnormally affected by this test mode.
(Amended 1976)

N.4. Density. - Temperature and pressure of the metered test liquid shall be measured during the test for the determination of density or volume correction factors when applicable. For Liquid Density and Volume Correction Factors (with respect to temperature and pressure) the publications shown in Table N.4. shall apply:
(Amended 1986 and 2004)

N.5. Testing Procedures.

N.5.1. Normal Tests. - The "normal" tests of a device shall be made over a range of discharge rates that may be anticipated under the conditions of installation.

N.5.1.1. Repeatability Tests. - Tests for repeatability should include a minimum of three consecutive test drafts of approximately the same size and be conducted under controlled conditions where variations in factors, such as, temperature pressure and flow rate are reduced to the extent that they will not affect the results obtained.
(Added 2001)

N.5.2. Special Tests. - Any test except as set forth in N.5.1. shall be considered a "special" test. Tests shall be conducted, if possible, to evaluate any special elements or accessories attached to or associated with the device. A device shall be tested at a minimum discharge rate of:

(a) 50% of the maximum discharge rate developed under the conditions of installation, or the minimum discharge rate marked on the device, whichever is less, or

(b) the lowest discharge rate practicable under conditions of installation.

Special tests may be conducted to develop any characteristics of the device that are not normally anticipated under the conditions of installation.
(Amended 2005)

N.6. Temperature Correction. - Corrections shall be made for any changes in volume resulting from the differences in liquid temperature between time of passage through the meter and time of volumetric determination of test draft.

N.7. Automatic Temperature or Density Compensation. When a device is equipped with an automatic temperature or density compensator, the compensator shall be tested by comparing the quantity indicated or recorded by the device (with the compensator connected and operating) with the actual delivered quantity corrected to the normal boiling point of the cryogenic product being measured or to the normal temperature and pressure as applicable.

Table N.4. Density or Volume Correction Factors	
Cryogenic Liquid	Publication
Argon	Tegeler, Ch., Span, R., Wagner, W. "A New Equation of State for Argon Covering the Fluid Region for Temperatures from the Melting Line to 700 K at Pressures up to 1000". *Mpa J. Phys. Chem. Ref. Data*, 28(3):779-850, 1999.
Ethylene	Smukala, J., Span, R. Wagner, W. "New Equation of State for Ethylene Covering the Fluid Region for Temperatures from the Melting Line to 450 K at Pressures up to 300 MPA." *J. Phys. Chem. Ref. Data*, 29(5):1053-1122, 2000.
Nitrogen	Span, R., Lemmon, E. W., Jacobsen, R.T., Wagner, W., and Yokozeki, A. "A Reference Thermodynamic Property Formulation for Nitrogen." *J. Phys. Chem. Ref. Data*, Volume 29, Number 6, pp. 1361-1433, 2000.
Oxygen	Schmidt, R., Wagner, W. "A New Form of the Equation of State for Pure Substances and its Application to Oxygen." *Fluid Phase Equilib.*, 19:175-200, 1985.
Hydrogen	"Thermophysical Properties of Fluids. 1. "Argon, Ethlene, Parahydrogen, Nitrogen, Nitrogen Trifluoride, and Oxygen," published in the *Journal of Physical and Chemical Reference Data*, Volume 11, 1982, Supplement No. 1, and published by the American Chemical Society and the American Institute of Physics for the National Institute of Standards and Technology.
Note: A complete database program containing all of the most recent equations for calculating density for various cryogenic liquids is available at www.nist.gov/srd/nist23.htm. There is a fee for download of this database.	

(Added 2004)

T. Tolerances

T.1. Application.

T.1.1. To Underregistration and to Overregistration. The tolerances hereinafter prescribed shall be applied to errors of underregistration and errors of overregistration.

T.2. Tolerance Values. – The maintenance and acceptance tolerances for normal and special tests shall be as shown in Table T.2.
(Amended 2003)

T.3. On Tests Using Transfer Standards. - To the basic tolerance values that would otherwise be applied, there shall be added an amount equal to two times the standard deviation of the applicable transfer standard when compared to a basic reference standard.
(Added 1976)

T.4. Repeatability. - When multiple tests are conducted at approximately the same flow rate and draft size, the range of the test results for the flow rate shall not exceed 40 percent of the absolute value of the maintenance tolerance and the results of each test shall be within the applicable tolerance. See also N.5.1.1.
(Added 2001)

UR. User Requirements

UR.1. Installation Requirements.

Table T.2. Accuracy Classes and Tolerances for Cryogenic Liquid-Measuring Devices				
Accuracy Class	Application	Acceptance Tolerance	Maintenance Tolerance	Special Test Tolerance
2.5	Cryogenic products; liquefied compressed gases other than liquid carbon dioxide	1.5%	2.5%	2.5%

(Added 2003)

UR.1.1. Discharge Rate. - A device shall be so installed that the actual maximum discharge rate will not exceed the rated maximum discharge rate. If necessary, means for flow regulation shall be incorporated in the installation.

UR.1.2. Length of Discharge Hose. - The discharge hose shall be of such a length and design as to keep vaporization of the liquid to a minimum.

UR.1.3. Maintenance of Liquid State. - A device shall be so installed and operated that the product being measured shall remain in the liquid state during passage through the meter.

UR.2. Use Requirements.

UR.2.1. Return of Indicating and Recording Elements to Zero. - The primary indicating elements (visual) and the primary recording elements shall be returned to zero immediately before each delivery.

UR.2.2. Condition of Discharge System. - The discharge system, up to the measuring element, shall be pre-cooled to liquid temperatures before a "zero" condition is established prior to the start of a commercial delivery.

UR.2.3. Vapor Return Line. - A vapor return line shall not be used during a metered delivery.
(Amended 1976)

UR.2.4. Drainage of Discharge Line. - On a dry-hose system, upon completion of a delivery, the vendor shall leave the discharge line connected to the receiving container with the valve adjacent to the meter in the closed position and the valve at the discharge line outlet in the open position for a period of at least:

(a) 1 minute for small delivery devices, and

(b) 3 minutes for large delivery devices,

to allow vaporization of some product in the discharge line to force the remainder of the product in the line to flow into the receiving container.
(Amended 1976)

UR.2.5. Conversion Factors. - Established conversion values (see references in N.4.) shall be used whenever metered liquids are to be billed in terms of:

(a) kilograms or pounds based on a meter indication of liters, gallons, cubic meters of gas, or cubic feet of gas; or,

(b) cubic meters or cubic feet of gas based on a meter indication of liters or gallons, kilograms, or pounds; or,

(c) liters or gallons based on a meter indication of kilograms or pounds, cubic meters of gas or cubic feet of gas.

All sales of cryogenic liquids shall be based on either kilograms or pounds, liters or gallons at NBP[1], cubic meters of gas or cubic feet of gas at NTP[1].
(Amended 1986)

UR.2.6. Temperature or Density Compensation.

UR.2.6.1. Use of Automatic Temperature or Density Compensators. - If a device is equipped with an automatic temperature or density compensator, this shall be connected, operable, and in use at all times. Such automatic temperature or density compensator may not be removed, nor may a compensated device be replaced with an uncompensated device, without the written approval of the weights and measures authority having jurisdiction over the device.

UR.2.6.2. Tickets or Invoices. - Any written invoice or printed ticket based on a reading of a device that is equipped with an automatic temperature or density compensator shall have shown thereon that the quantity delivered has been adjusted to the quantity at the NBP of the specific cryogenic product or the equivalent volume of gas at NTP.

UR.2.6.3. Printed Ticket. - Any printed ticket issued by a device of the computing type on which there is printed the total computed price, the total quantity of the delivery, or the price per unit, shall also show the other two values (either printed or in clear script).

UR.2.6.4. Ticket in Printing Device. - A ticket shall not be inserted into a device equipped with a ticket printer until immediately before a delivery is begun, and in no case shall a ticket be in the device when the vehicle is in motion while on a public street, highway, or thoroughfare.

UR.2.7. Pressure of Tanks with Volumetric Metering Systems Without Temperature Compensation. - When the saturation pressure of the product in the vendor's tank exceeds 240 kPa (35 psia), a correction shall be applied to the written invoice or printed ticket using the appropriate tables as listed in N.4.; or the saturation pressure shall be reduced to 207 kPa (30 psia) (if this can be safely accomplished) prior to making a delivery.
(Added 1976)

[1] See Definitions section.

Sec. 3.35. Milk Meters

A. Application

A.1. - This code applies to devices used for the measurement of milk; generally applicable to, but not limited to, meters used in dairies, milk processing plants, and cheese factories, to measure incoming bulk milk.

A.2. - See also Sec. 1.10; General Code requirements.

A.3. - This code does not apply to mass flow meters (see Sec. 3.37. Code for Mass Flow Meters).
(Added 1994)

S. Specifications

S.1. Design of Indicating and Recording Elements and of Recorded Representations.

S.1.1. Primary Elements

S.1.1.1. General. - A meter shall be equipped with a primary indicating element and may also be equipped with a primary recording element.

S.1.1.2. Units.

(a) A meter shall indicate, and record if the meter is equipped to record, its deliveries in terms of liters or gallons. Fractional parts of the liter shall be in terms of decimal subdivisions. Fractional parts of the gallon shall be in terms of either decimal or binary subdivisions.

(b) When it is an industry practice to purchase and ell milk by weight based upon 1.03 kg/L (8.6 lb/gal), the primary indicating element may indicate in kilograms or pounds. The weight value division shall be a decimal multiple or submultiple of 1, 2, or 5. Fractional parts of the kilogram or pound shall be in decimal subdivisions. (See S.4.5.)
(Amended 1997)

S.1.1.3. Value of Smallest Unit. - The value of the smallest unit of indicated quantity and recorded quantity, if the meter is equipped to record, shall not exceed the equivalent of:

(a) 0.5 L or 5 kg (1 pt or 1 lb) when measuring quantities less than or equal to 4 000 L or 4 000 kg (1 000 gal or 8 600 lb), or

(b) 5 L or 5 kg (1 gal or 10 lb) when measuring quantities in excess of 4 000 L or 4 000 kg (1 000 gal or 8 600 lb).
(Amended 1989)

S.1.1.4. Advancement of Indicating and Recording Elements. - Primary indicating and recording elements shall be susceptible to advancement only by the mechanical operation of the meter. However, a meter may be cleared by advancing its elements to zero, but only if:

(a) the advancing movement, once started, cannot be stopped until zero is reached, or

(b) in the case of indicating elements only, such elements are automatically obscured until the elements reach the correct zero position.

S.1.1.5. Return to Zero. - Primary indicating elements and primary recording elements, if the device is equipped to record, shall be readily returnable to a definite zero indication. Means shall be provided to prevent the return of the primary indicating elements and the primary recording elements, if the device is so equipped, beyond their correct zero position.

S.1.1.6. Indication of Measurement. - A meter shall be constructed to show automatically its initial zero condition and the volume measured up to the nominal capacity of the device.

S.1.2. Graduations.

S.1.2.1. Length. - Graduations shall be so varied in length that they may be conveniently read.

S.1.2.2. Width. - In any series of graduations, the width of a graduation shall in no case be greater then the width of the minimum clear interval between graduations, and the width of main graduations shall be not more than 50 percent greater than the width of subordinate graduations. Graduations shall in no case be less than 0.2 mm (0.008 in) in width.

S.1.2.3. Clear Interval Between Graduations. - The clear interval shall be not less than 1.0 mm (0.04 in). If the graduations are not parallel, the measurement shall be made:

(a) along the line of relative movement between the graduations at the end of the indicator, or

(b) if the indicator is continuous, at the point of widest separation of the graduations.

S.1.3. Indicators.

S.1.3.1. Symmetry. - The index of an indicator shall be symmetrical with respect to the graduations, at least throughout that portion of its length associated with the graduations.

S.1.3.2. Length. - The index of an indicator shall reach to the finest graduations with which it is used, unless the indicator and the graduations are in the same plane, in which case the distance between the end of the indicator and the ends of the graduations, measured along the line of graduations, shall be not more than 1.0 mm (0.04 in).

S.1.3.3. Width. - The width of the index of an indicator in relation to the series of graduations with which it is used shall be not greater than:

(a) *the width of the narrowest graduation**, and *[*Nonretroactive as of January 1, 2002]* (Amended 2001)

(b) the width of the minimum clear interval between graduations.

When the index of an indicator extends along the entire length of a graduation, that portion of the index of the indicator that may be brought into coincidence with the graduation shall be of the same width throughout the length of the index that coincides with the graduation.

S.1.3.4. Clearance. - The clearance between the index of an indicator and the graduations shall in no case be more than 1.5 mm (0.06 in).

S.1.3.5. Parallax. - Parallax effects shall be reduced to the practicable minimum.

S.1.3.6. Travel of Indicator. - If the most sensitive element of the primary indicating element utilizes an indicator and graduations, the relative movement of these parts corresponding to the smallest indicated value shall be not less than 5 mm (0.20 in).

S.1.4. Computing-Type Devices.

S.1.4.1 Display of Unit Price. - In a device of the computing type, means shall be provided for displaying on the outside of the device, and in close proximity to the display of the total computed price, the price per unit at which the device is set to compute.

S.1.4.2. Printed Ticket. - If a computing-type device issues a printed ticket which displays the total computed price, the ticket also shall have printed clearly thereon the total quantity of the delivery, the appropriate fraction of the quantity, and the price per unit of quantity.
(Amended 1989)

S.1.4.3. Money-Value Computations. - Money-value computations shall be of the full-computing type in which the money value at a single unit price, or at each of a series of unit prices, shall be computed for every delivery within either the range of measurement of the device or the range of the computing elements, whichever is less. Value graduations shall be supplied and shall be accurately positioned. The value of each graduated interval shall be 1 cent.

S.1.4.4. Money Values, Mathematical Agreement. Any digital money-value indication and any recorded money value on a computing-type device shall be in mathematical agreement with its associated quantity indicating or representation to within 1 cent of money value.

S.2. Design of Measuring Elements.

S.2.1. Vapor Elimination. - A metering system shall be equipped with an effective vapor eliminator or other effective means automatic in operation to prevent the passage of vapor and air through the meter. Vent lines from the air (or vapor) eliminator shall be made of metal tubing or some other suitably rigid material.

S.2.2. Maintaining Flooded Condition. - The vent on the vapor eliminator shall be positioned or installed in such a manner that the vapor eliminator cannot easily be emptied between uses.

S.2.3. Provision for Sealing. - Adequate provision shall be made for an approved means of security (e.g., data change audit trail) or for physically applying a security seal in such a manner that requires the security seal to be broken before an adjustment or interchange may be made of:

(a) any measuring element or indicating element,

(b) any adjustable element for controlling delivery rate, when such rate tends to affect the accuracy of deliveries, and

(c) any metrological parameter that will affect the metrological integrity of the device or system.

When applicable, the adjusting mechanism shall be readily accessible for purposes of affixing a security seal.

*[Audit trails shall use the format set forth in Table S.2.3.]**
*[*Nonretroactive as of January 1, 1995]*
(Amended 2006)

S.2.4. Directional Flow Valves. - Valves intended to prevent reversal of flow shall be automatic in operation.

S.3. Design of Intake Lines.

S.3.1. Diversion of Liquid to be Measured. - No means shall be provided by which any liquid can be diverted from the supply tank to the receiving tank without being measured by the device. A manually controlled outlet that may be opened for purging or draining the measuring system shall be permitted. Effective means shall be provided to prevent passage of liquid through any such outlet during normal operation of the measuring system.
(Amended 1994)

S.3.2. Intake Hose. - The intake hose shall be:

(a) of the dry-hose type,

(b) adequately reinforced,

(c) not more than 6 m (20 ft) in length unless it can be demonstrated that a longer hose is essential to permit transfer from a supply tank; and

(d) connected to the pump at horizontal or above to permit complete drainage of the hose.
(Amended 1991)

S.4. Marking Requirements.

S.4.1. Limitation of Use. - If a meter is intended to measure accurately only liquids having particular properties, or to measure accurately only under specific installation or operating conditions, or to measure accurately only when used in conjunction with specific accessory equipment, these limitations shall be clearly and permanently stated on the meter.

Table S.2.3. Categories of Device and Methods of Sealing	
Category of Device	***Method of Sealing***
Category 1: No remote configuration capability.	*Seal by physical seal or two event counters: one for calibration parameters and one for configuration parameters.*
Category 2: Remote configuration capability, but access is controlled by physical hardware. *The device shall clearly indicate that it is in the remote configuration mode and record such message if capable of printing in this mode or shall not operate while in this mode.*	*The hardware enabling access for remote communication must be on-site. The hardware must be sealed using a physical seal or an event counter for calibration parameters and an event counter for configuration parameters. The event counters may be located either at the individual measuring device or at the system controller; however, an adequate number of counters must be provided to monitor the calibration and configuration parameters of the individual devices at a location. If the counters are located in the system controller rather than at the individual device, means must be provided to generate a hard copy of the information through an on-site device.*
Category 3: Remote configuration capability access may be unlimited or controlled through a software switch (e.g., password). *The device shall clearly indicate that it is in the remote configuration mode and record such message if capable of printing in this mode or shall not operate while in this mode.*	*An event logger is required in the device; it must include an event counter (000 to 999), the parameter ID, the date and time of the change, and the new value of the parameter. A printed copy of the information must be available through the device or through another on-site device. The event logger shall have a capacity to retain records equal to ten times the number of sealable parameters in the device, but not more than 1000 records are required. (**Note:** Does not require 1000 changes to be stored for each parameter.)*

[Nonretroactive as of January 1, 1995]
(Table Added 2006)

S.4.2. Discharge Rates. - A meter shall be marked to show its designed maximum and minimum discharge rates. The marked minimum discharge rate shall not exceed 20% of the marked maximum discharge rate.
(Amended 2003)

Note: See Example in Section 3.30. Liquid-Measuring Devices Code, paragraph S.4.4.1.
(Added 2003)

S.4.3. Measuring Components. - All components that affect the measurement of milk that are disassembled for cleaning purposes shall be clearly and permanently identified with a common serial number.

S.4.4. Flood Volume. - When applicable, the volume of product (to the nearest minimum division of the meter) necessary to flood the system when dry shall be clearly, conspicuously, and permanently marked on the air eliminator.

S.4.5. Conversion Factor. - When the conversion factor of 1.03 kg/L (8.6 lb/gal) is used to convert the volume of milk to weight, the conversion factor shall be clearly marked on the primary indicating element and recorded on the delivery ticket.

N. Notes

N.1. Test Liquid.

(a) A meter shall be tested with the liquid to be commercially measured or with a liquid of the same general physical characteristics. Following a satisfactory examination, the weights and measures official should attach a seal or tag indicating the product used during the test.
(Amended 1989)

(b) A milk measuring system shall be tested with the type of milk to be measured when the accuracy of the system is affected by the characteristics of milk (e.g., positive displacement meters).
(Added 1989)

N.2. Evaporation and Volume Change. - Care shall be exercised to reduce to a minimum, evaporation losses and volume changes resulting from changes in temperature of the test liquid.

N.2.1. Temperature Correction. - Corrections shall be made for any changes in volume resulting from the differences in liquid temperatures between time of passage through the meter and time of volumetric determination in the test measure. When adjustments are necessary, appropriate tables should be used.

N.3. Test Drafts. - Test drafts should be equal to at least the amount delivered by the device in one minute at its maximum discharge rate, and shall in no case be less than 400 L or 400 kg (100 gal or 1 000 lb).
(Amended 1989)

N.4. Testing Procedures.

N.4.1. Normal Tests. - The "normal" test of a meter shall be made at the maximum discharge rate that may be anticipated under the conditions of the installation. The "normal" test shall include a determination of the effectiveness of the air elimination system.

N.4.1.1. Repeatability Tests. – Tests for repeatability should include a minimum of three consecutive test drafts of approximately the same size and be conducted under controlled conditions where variations in factors, such as temperature, pressure, and flow rate are reduced to the extent that they will not affect the results obtained.
(Added 2002)

N.4.2. Special Tests. - "Special" tests shall be made to develop the operating characteristics of a device and any special elements and accessories attached to or associated with the device. Any test except as set forth in N.4.1. shall be considered a special test.
(Amended 2005)

N.4.3. System Capacity. - The test of a milk-metering system shall include the verification of the volume of product necessary to flood the system as marked on the air eliminator.

T. Tolerances

T.1. Application.

T.1.1. To Underregistration and to Overregistration. The tolerances hereinafter prescribed shall be applied to errors of underregistration and errors of overregistration.

T.2. Tolerance Values. - Maintenance and acceptance tolerances shall be as shown in Table 1.
(Amended 1989)

T.3. Repeatability – When multiple tests are conducted at approximately the same flow rate and draft size, the range of the test results for the flow rate shall not exceed 40 percent of the absolute value of the maintenance tolerance and the results of each test shall be within the applicable tolerance. See also N.4.1.1.
(Added 2002)

UR. User Requirements

UR.1. Installation Requirements.

UR.1.1. Plumb and Level Condition. - A device installed in a fixed location shall be installed plumb and level, and the installation shall be sufficiently strong and rigid to maintain this condition.

UR.1.2. Discharge Rate. - A meter shall be so installed that the actual maximum discharge rate will not exceed the rated maximum discharge rate. If necessary, means for flow regulation shall be incorporated in the installation, in which case this shall be fully effective and automatic in operation.

UR.1.3. Unit Price. - There shall be displayed on the face of a device of the computing type the unit price at which the device is set to compute.

UR.1.4. Intake Hose. - The intake hose shall be so installed as to permit complete drainage and that all available product is measured following each transfer.

UR.2. Use Requirements.

Table 1. Tolerances		
Milk Meters		
Indication	Maintenance	Acceptance
gallons	gallons	gallons
100	0.5	0.3
200	0.7	0.4
300	0.9	0.5
400	1.1	0.6
500	1.3	0.7
Over 500	Add 0.002 gallon per indicated gallon over 500	Add 0.001 gallon per indicated gallon over 500

*Added 1989

UR.2.1. Return of Indicating and Recording Elements to Zero. - The primary indicating elements (visual), and the primary recording elements when these are returnable to zero, shall be returned to zero before each transfer.

UR.2.2. Printed Ticket. - Any printed ticket issued by a device of the computing type on which there is printed the total computed price, the total quantity, or the price per unit of quantity, shall also show the other two values (either printed or in clear script).
(Amended 1989)

UR.2.3. Ticket in Printing Device. - A ticket shall not be inserted into a device equipped with a ticket printer until immediately before a transfer is begun. If the meter is mounted on a vehicle, in no case shall a ticket be in the device when the vehicle is in motion while on a public street, highway, or thoroughfare.

UR.2.4. Credit for Flood Volume. - The volume of product necessary to flood the system as marked on the air eliminator shall be individually recorded on the ticket of each transfer affected.

[THIS PAGE LEFT INTENTIONALLY BLANK]

Sec. 3.36. Water Meters

A. Application

A.1. This code applies to devices used for the measurement of water; generally applicable to, but not limited to, utilities type meters installed in residences or business establishments and meters installed in batching systems.
(Amended 2002)

A.2. This code does not apply to:

(a) water meters mounted on vehicle tanks (for which see Sec. 3.31. Code for Vehicle Tank Meters).

(b) mass flow meters (see Sec. 3.37. Code for Mass Flow Meters).
(Added 1994)

A.3. See also Sec. 1.10; General Code requirements.

S. Specifications

S.1. Design of Indicating and Recording Elements and of Recorded Representations.

S.1.1. Primary Elements.

S.1.1.1. General. A water meter shall be equipped with a primary indicating element and may also be equipped with a primary recording element. Such elements shall be visible at the point of measurement or be stored in non-volatile and nonresettable memory. The display may be remotely located provided it is readily accessible to the customer.
(Amended 2002)

S.1.1.2. Units. A water meter shall indicate and record, if the device is equipped to record, its deliveries in terms of liters, gallons or cubic feet or binary or decimal subdivisions thereof except batch plant meters, which shall indicate deliveries in terms of liters, gallons or decimal subdivisions of the liter or gallon only.

S.1.1.3. Value of Smallest Unit. The value of the smallest unit of indicated delivery and recorded delivery, if the device is equipped to record, shall not exceed the equivalent of:

(a) 50 L (10 gal) on utility type meters,

(b) 0.2 L (1/10 gal) on batching meters delivering less than 375 L/min (100 gal/min), or

(c) 5 L (1 gal) on batching meters delivering 375 L/min (100 gal/min) or more.

S.1.1.4. Advancement of Indicating and Recording Elements. Primary indicating and recording elements shall be susceptible to advancement only by the mechanical operation of the device.

S.1.1.5. Return to Zero. If the meter is so designed that the primary indicating elements are readily returnable to a definite zero indication, means shall be provided to prevent the return of these elements beyond their correct zero position.

S.1.2. Graduations.

S.1.2.1. Length. Graduations shall be so varied in length that they may be conveniently read.

S.1.2.2. Width. In any series of graduations, the width of a graduation shall in no case be greater than the width of the minimum clear interval between graduations, and the width of main graduations shall be not more than 50 percent greater than the width of subordinate graduations. Graduations shall in no case be less than 0.2 mm (0.008 in) in width.

S.1.2.3. Clear Interval Between Graduations. The clear interval shall not be less than 1.0 mm (0.04 in). If the graduations are not parallel, the measurement shall be made:

(a) along the line of relative movement between the graduations at the end of the indicator, or

(b) if the indicator is continuous, at the point of widest separation of the graduations.

S.1.3. Indicators.

S.1.3.1. Symmetry. The index of an indicator shall be symmetrical with respect to the graduations, at least throughout that portion of its length associated with the graduations.

S.1.3.2. Length. The index of an indicator shall reach to the finest graduations with which it is used, unless the indicator and the graduations are in the same plane, in which case the distance between the end of the indicator and the ends of the graduations, measured along the line of the graduations, shall be not more than 1.0 mm (0.04 in).

S.1.3.3. Width. The width of the index of an indicator in relation to the series of graduations with which it is used shall not be greater than:

(a) *the width of the narrowest graduation**, and *[*Nonretroactive as of January 1, 2002]* (Amended 2001)

(b) the width of the minimum clear interval between graduations.

When the index of an indicator extends along the entire length of a graduation, that portion of the index of the indicator that may be brought into coincidence with the graduation shall be of the same width throughout the length of the index that coincides with the graduation.

S.1.3.4. Clearance. The clearance between the index of an indicator and the graduations shall in no case be more than 1.5 mm (0.06 in).

S.1.3.5. Parallax. Parallax effects shall be reduced to the practicable minimum.

S.2. Design of Measuring Elements.

S.2.1. Provision for Sealing. - Adequate provision shall be made for applying security seals in such a manner that no adjustment or interchange may be made of:

(a) any measurement elements, and

(b) any adjustable element for controlling delivery rate when such rate tends to affect the accuracy of deliveries.

The adjusting mechanism shall be readily accessible for purposes of affixing a security seal.
(Amended 2006)

S.2.2. Batching Meters Only.

S.2.2.1. Air Elimination. Batching meters shall be equipped with an effective air eliminator.

S.2.2.2. Directional Flow Valves. Valves intended to prevent reversal of flow shall be automatic in operation.

S.2.3. Multi-Jet Meter Identification. Multi-jet water meters shall be clearly and permanently marked as such on the device or identified on the Certificate of Conformance.
(Added 2003)

N. Notes

N.1. Test Liquid. A meter shall be tested with water.

N.2. Evaporation and Volume Change. Care shall be exercised to reduce to a minimum, evaporation losses and volume changes resulting from changes to temperature of the test liquid.

N.3. Test Drafts. - Test drafts should be equal to at least the amount delivered by the device in 2 minutes and in no case less than the amount delivered by the device in 1 minute at the actual maximum flow rate developed by the installation. The test draft sizes shown in Table N.4.1., shall be followed as closely as possible.
(Amended 2003)

N.4. Testing Procedures.

N.4.1. Normal Tests. The normal test of a meter shall be made at the maximum discharge rate developed by the installation. Meters with maximum gallon per minute ratings higher than the values specified in Table N.4.1. may be tested up to the meter rating, with meter indications no less than those shown.
(Amended 1990, 2002 and 2003)

Table N.4.1. Flow Rate and Draft Size for Water Meters
Normal Tests

Meter Size (inches)	Rate of Flow (gal/min)	Maximum Rate Meter Indication/Test Draft	
		gal	ft^3
Less than 5/8	8	50	5
5/8	15	50	5
3/4	25	50	5
1	40	100	10
1 1/2	80	300	40
2	120	500	40
3	250	500	50
4	350	1 000	100
6	700	1 000	100

(Table Added 2003)

N.4.1.1. Repeatability Tests. – Tests for repeatability should include a minimum of three consecutive test drafts of approximately the same size and be conducted under controlled conditions where variations in factors, such as temperature, pressure, and flow rate are reduced to the extent that they will not affect the results obtained.
(Added 2002)

N.4.2. Special Tests. Special tests to develop the operating characteristics of meters may be made according to the rates and quantities shown in Table N.4.2.
(Amended 2003)

N.4.3. Batching Meter Tests. Tests on batching meters should be conducted at the maximum and intermediate rates only.

Table N.4.2. Flow Rate and Draft Size for Water Meters
Special Tests

Meter Size (inches)	Intermediate Rate			Minimum Rate		
	Rate of Flow (gal/min)	Meter Indication/Test Draft		Rate of flow (gal/min)	Meter Indication/Test Draft	
		gal	ft^3		gal	ft^3
Less than or equal to 5/8	2	10	1	1/4	5	1
3/4	3	10	1	1/2	5	1
1	4	10	1	3/4	5	1
1 1/2	8	50	5	1 1/2	10	1
2	15	50	5	2	10	1
3	20	50	5	4	10	1
4	40	100	10	7	50	5
6	60	100	10	12	50	5

(Table Added 2003)

Table T.1. Accuracy Classes and Tolerances for Water Meters					
Accuracy Class	Application		Acceptance Tolerance	Maintenance Tolerance	Tolerance for Special Tests Conducted at the Minimum Flow Rate
1.5	Water, Other than Multi-Jet Water Meters	Overregistration	1.5%	1.5%	1.5%
		Underregistration	1.5%	1.5%	5.0%
1.5	Water, Multi-Jet Water Meters	Overregistration	1.5%	1.5%	3.0%
		Underregistration	1.5%	1.5%	3.0%

(Table Added 2003)

T. Tolerances

T.1. Tolerance Values. Maintenance and acceptance tolerances shall be as shown in Table T.1.
(Amended 2003)

T.1.1. Repeatability. When multiple tests are conducted at approximately the same flow rate, the range of the test results shall not exceed 0.6 percent for tests performed at the normal and intermediate flow rates, and 1.3 percent for tests performed at the minimum flow rate, and each test shall be within the applicable tolerance.
(Added 2002)

UR. User Requirements

UR.1. Batching Meters Only.

UR.1.1. Strainer. A filter or strainer shall be provided if it is determined that the water contains excessive amounts of foreign material.

UR.1.2. Siphon Breaker. An automatic siphon breaker or other effective means shall be installed in the discharge piping at the highest point of outlet, in no case below the top of the meter, to prevent siphoning of the meter and permit rapid drainage of the pipe or hose.

UR.1.3. Provision for Testing. Acceptable provisions for testing shall be incorporated into all meter systems. Such provisions shall include a two-way valve, or manifold valving, and a pipe or hose installed in the discharge line accessible to the proper positioning of the test measure.

Sec. 3.37. - Mass Flow Meters

A. Application

A.1. Liquids. - This code applies to devices that are designed to dynamically measure the mass, or the mass and density of liquids. It also specifies the relevant examinations and tests that are to be conducted.
(Amended 1997)

A.2. Vapor (Gases). - This code applies to devices that are designed to dynamically measure the mass of hydrocarbon gas in the vapor state. Examples of these products are propane, propylene, butanes, butylenes, ethane, methane, natural gas and any other hydrocarbon gas/air mix.

S. Specifications

S.1. Indicating and Recording Elements.

S.1.1. Indicating Elements. - A measuring assembly shall include an indicating element. Indications shall be clear, definite, accurate, and easily read under normal conditions of operation of the instrument.

S.1.2. Compressed Natural Gas Dispensers. - Except for fleet sales and other price contract sales, a compressed natural gas dispenser used to refuel vehicles shall be of the computing type and shall indicate the quantity, the unit price, and the total price of each delivery. The dispenser shall display the mass measured for each transaction either continuously on an external or internal display accessible during the inspection and test of the dispenser, or display the quantity in mass units by using controls on the device.
(Added 1994)

S.1.3. Units.

S.1.3.1. Units of Measurement. - Deliveries shall be indicated and recorded in grams, kilograms, metric tons, pounds, tons, and/or liters, gallons, quarts, pints and decimal subdivisions thereof. The indication of a delivery shall be on the basis of apparent mass versus a density of 8.0 g/cm^3. The volume indication shall be based on the mass measurement and an automatic means to determine and correct the changes in product density.
(Amended 1993 and 1997)

S.1.3.1.1. Compressed Natural Gas Used as an Engine Fuel. - When compressed natural gas is dispensed as an engine fuel, the delivered quantity shall be indicated in "gasoline liter equivalent (GLE) units" or "gasoline gallon equivalent (GGE) units" (see Definitions).
(Added 1994)

S.1.3.2. Numerical Value of Quantity-Value Divisions. - The value of a scale interval shall be equal to:

(a) 1, 2, or 5, or

(b) a decimal multiple or submultiple of 1, 2, or 5.
(Amended 2006)

S.1.3.3. Maximum Value of Quantity-Value Divisions.

(a) The maximum value of the quantity-value division for liquids shall be not greater than 0.2 percent of the minimum measured quantity.

(b) For dispensers of compressed natural gas used to refuel vehicles, the value of the division for the gasoline liter equivalent shall not exceed 0.01 GLE; the division for gasoline gallon equivalent (GGE) shall not exceed 0.001 GGE. The maximum value of the mass division shall not exceed 0.001 kg or 0.001 lb.
(Amended 1994)

S.1.3.4. Values Defined. - Indicated values shall be adequately defined by a sufficient number of figures, words, symbols, or combinations thereof. A display of "zero" shall be a zero digit for all displayed digits to the right of the decimal mark and at least one to the left.

S.2. Operating Requirements.

S.2.1. Return to Zero. - Except for measuring assemblies in a pipeline:

(a) One indicator and the primary recording elements, if the device is equipped to record, shall be provided with a means for readily returning the indication to zero either automatically or manually.

(b) It shall not be possible to return primary indicating elements, or primary recording elements, beyond the correct zero position.
(Amended 1993)

S.2.2. Indicator Reset Mechanism. - The reset mechanism for the indicating element shall not be operable during a delivery. Once the zeroing operation has begun, it shall not be possible to indicate a value other than the latest measurement, or "zeros" when the zeroing operation has been completed.

S.2.3. Nonresettable Indicator. - An instrument may also be equipped with a nonresettable indicator if the indicated values cannot be construed to be the indicated values of the resettable indicator for a delivered quantity.

S.2.4. Provisions for Power Loss.

S.2.4.1. Transaction Information. - In the event of a power loss, the information needed to complete any transaction in progress at the time of the power loss (such as the quantity and unit price, or sales price) shall be determinable for at least 15 minutes at the dispenser or at the console if the console is accessible to the customer.
(Added 1993)

S.2.4.2. User Information. - The device memory shall retain information on the quantity of fuel dispensed and the sales price totals during power loss.
(Added 1993)

S.2.5. Display of Unit Price and Product Identity.

S.2.5.1. Unit Price. - A computing or money-operated device shall be able to display on each face the unit price at which the device is set to compute or to dispense.
(Added 1993)

S.2.5.2. Product Identity. - A device shall be able to conspicuously display on each side the identity of the product being dispensed.
(Added 1993)

S.2.5.3. Selection of Unit Price. *- Except for dispensers used exclusively for fleet sales, other price contract sales, and truck refueling (e.g truck stop dispensers used only to refuel trucks), when a product or grade is offered for sale at more than one uni price through a computing device the selection of the unit price shall be mad prior to delivery using controls on the device or other customer-activated controls. A system shall not permit a change to the unit price during delivery of a product.*
[Nonretroactive as of January 1, 1998]
(Added 1997)

S.2.5.4. Agreement Between Indications. - When a quantity value indicated or recorded by an auxiliary element is a derived or computed value based on data received from a retail motor fuel dispenser, the value may differ from the quantity value displayed on the dispenser, provided the following conditions are met:

(a) all total money values for an individual sale that are indicated or recorded by the system agree; and

(b) within each element the values indicated or recorded meet the formula (quantity x unit price = total sales price) to the closest cent.
[Nonretroactive as of January 1, 1998]
(Added 1997)

S.2.6. Money-Value Computations. - A computing device shall compute the total sales price at any single-purchase unit price (i.e., excluding fleet sales, other price contract sales, and truck stop dispensers used only to refuel trucks) for which the product being measured is offered for sale at any delivery possible within either the measurement range of the device or the range of the computing elements, whichever is less.
(Added 1993)

S.2.6.1. Auxiliary Elements. - If a system is equipped with auxiliary indications, all indicated money-value and quantity divisions of the auxiliary element shall be identical with those of the primary element.
(Added 1993)

S.2.6.2. Display of Quantity and Total Price. - When a delivery is completed, the total price and quantity for that transaction shall be displayed on the face of the dispenser for at least 5 minutes or until the next transaction is initiated by using controls on the device or other user-activated controls.
(Added 1993)

S.2.7. Recorded Representations, Point-of-Sale Systems. - *The sales information recorded by cash registers when interfaced with a retail motor-fuel dispenser shall contain the following information for products delivered by the dispenser:*

(a) the total volume of the delivery,

(b) the unit price,

(c) the total computed price, and

(d) the product identity by name, symbol, abbreviation, or code number.

[Nonretroactive as of January 1, 1986.]
(Added 1993) (Amended 2000)

S.2.8. Indication of Delivery. *- The device shall automatically show on its face the initial zero condition and the quantity delivered (up to the nominal capacity). However, the first 0.03 L (0.009 gal) of a delivery and its associated total sales price need not be indicated.*
[Nonretroactive as of January 1, 1998]
(Added 1997)

S.3. Measuring Elements and Measuring Systems.

S.3.1. Maximum and Minimum Flow-Rates.

(a) The ratio of the maximum to minimum flow-rates specified by the manufacturer for devices measuring liquified gases shall be 5:1 or greater.

(b) The ratio of the maximum to minimum flow-rates specified by the manufacturer for devices measuring other than liquified gases shall be 10:1 or greater.

S.3.2. Adjustment Means. - An assembly shall be provided with means to change the ratio between the indicated quantity and the quantity of liquid measured by the assembly. A bypass on the measuring assembly shall not be used for these means.

S.3.2.1. Discontinuous Adjusting Means. - When the adjusting means changes the ratio between the indicated quantity and the quantity of measured liquid in a discontinuous manner, the consecutive values of the ratio shall not differ by more than 0.1 percent.

S.3.3. Vapor Elimination. - A liquid-measuring instrument or measuring system shall be equipped with an effective vapor or air eliminator or other effective means, automatic in operation, to prevent the measurement of vapor and air. Vent lines from the air or vapor eliminator shall be made of metal tubing or some other suitable rigid material.
(Amended 1999)

S.3.3.1. Vapor Elimination on Loading Rack Liquid Metering Systems.

(a) A loading rack liquid metering system shall be equipped with a vapor or air eliminator or other automatic means to prevent the passage of vapor and air through the meter unless the system is designed or operationally controlled by a method, approved by the weights and measures jurisdiction having statutory authority over the device, such that neither air nor vapor can enter the system.

(b) Vent lines from the air or vapor eliminator (if present) shall be made of metal tubing or other rigid material.

(Added 1995)

S.3.4. Maintenance of Liquid State. - A liquid-measuring device shall be installed so that the measured product remains in a liquid state during passage through the instrument.

S.3.5. Provision for Sealing. - Adequate provision shall be made for an approved means of security (e.g., data change audit trail) or physically applying security seals in such a manner that no adjustment or interchange may be made of:

(a) any measuring or indicating element;

(b) any adjustable element for controlling delivery rate when such rate tends to affect the accuracy of deliveries;

(c) the zero adjustment mechanism; and

(d) any metrological parameter that will affect the metrological integrity of the device or system.

When applicable, the adjusting mechanism shall be readily accessible for purposes of affixing a security seal.

*[Audit trails shall use the format set forth in Table S.3.5.]**
*[*Nonretroactive as of January 1, 1995]*
(Amended 1992, 1995 and 2006)

S.3.6. Automatic Density Correction.

(a) An automatic means to determine and correct for changes in product density shall be incorporated in any mass flow metering system that is affected by changes in the density of the product being measured.

(b) Volume-measuring devices with automatic temperature compensation used to measure natural gas as a motor vehicle engine fuel shall be equipped with an automatic means to determine and correct for changes in product density due to changes in the temperature, pressure, and composition of the product.

(Amended 1994, 1997 and 2000)

Table S.3.5. Categories of Device and Methods of Sealing	
Category of Device	***Method of Sealing***
Category 1: No remote configuration capability.	*Seal by physical seal or two event counters: one for calibration parameters and one for configuration parameters.*
Category 2: Remote configuration capability, but access is controlled by physical hardware. *The device shall clearly indicate that it is in the remote configuration mode and record such message if capable of printing in this mode or shall not operate while in this mode.*	*[The hardware enabling access for remote communication must be on-site. The hardware must be sealed using a physical seal or an event counter for calibration parameters and an event counter for configuration parameters. The event counters may be located either at the individual measuring device or at the system controller; however, an adequate number of counters must be provided to monitor the calibration and configuration parameters of the individual devices at a location. If the counters are located in the system controller rather than at the individual device, means must be provided to generate a hard copy of the information through an on-site device.]** *[* Nonretroactive as of January 1, 1996]*
Category 3: Remote configuration capability access may be unlimited or controlled through a software switch (e.g., password). *[Nonretroactive and enforceable as of January 1, 1995]* *The device shall clearly indicate that it is in the remote configuration mode and record such message if capable of printing in this mode or shall not operate while in this mode.* *[Nonretroactive as of January 1, 2001]*	*An event logger is required in the device; it must include an event counter (000 to 999), the parameter ID, the date and time of the change, and the new value of the parameter. A printed copy of the information must be available through the device or through another on-site device. The event logger shall have a capacity to retain records equal to ten times the number of sealable parameters in the device, but not more than 1000 records are required. (Note: Does not require 1000 changes to be stored for each parameter.)*

[Nonretroactive and enforceable as of January 1, 1995]
(Table Added 1995) (Amended 1998, 1999, 2005 and 2006)

S.3.7. Pressurizing the Discharge Hose. - The discharge hose for compressed natural gas shall automatically pressurize prior to the device beginning to register the delivery.
(Added 1993)

S.3.8. Zero-Set-Back Interlock, Retail Motor-Fuel Devices. - A device shall be constructed so that:

(a) after a delivery cycle has been completed by moving the starting lever to any position that shuts off the device, an automatic interlock prevents a subsequent delivery until the indicating elements, and recording elements if the device is equipped and activated to record, have been returned to their zero positions;
(Added 1993)

(b) the discharge nozzle cannot be returned to its designed hanging position (that is, any position where the tip of the nozzle is placed in its designed receptacle and the lock can be inserted) until the starting lever is in its designed shut-off position and the zero-set-back interlock has been engaged; and

(c) in a system with more than one dispenser supplied by a single pump, an effective automatic control valve in each dispenser prevents product from being delivered until the indicating elements on that dispenser are in a correct zero position.

S.4. Discharge Lines and Valves.

S.4.1. Diversion of Measured Product. - No means shall be provided by which any measured product can be diverted from the measuring instrument. However, two or more delivery outlets may be permanently installed and operated simultaneously, provided that any diversion of flow to other than the intended receiving receptacle cannot be readily accomplished or is readily apparent. Such means include physical barriers, visible valves or indications that make it clear which outlets are in operation, and explanatory signs if deemed necessary.

An outlet that may be opened for purging or draining the measuring system, or for recirculating product if recirculation is required in order to maintain the product in a deliverable state shall be permitted. Effective automatic means shall be provided to prevent the passage of liquid through any such outlet during normal operation of the measuring system and to inhibit meter indications (or advancement of indications) and recorded representations while the outlet is in operation.
(Amended 2002 and 2006)

S.4.2. Pump-Discharge Unit. - A pump-discharge unit for liquids equipped with a flexible discharge hose shall be of the wet-hose type.
(Added 1993)

S.4.3. Directional Flow Valves. - If a reversal of flow could result in errors that exceed the tolerance for the minimum measured quantity, a valve or valves or other effective means, automatic in operation (and equipped with a pressure limiting device, if necessary) to prevent the reversal of flow shall be properly installed in the system. (See N.1.)

S.4.4. Discharge Valves. - A discharge valve may be installed on a discharge line only if the system is a wet-hose type. Any other shut-off valve on the discharge side of the instrument shall be of the automatic or semiautomatic predetermined-stop type or shall be operable only:

- by means of a tool (but not a pin) entirely separate from the device, or
- by means of a security seal with which the valve is sealed open.

S.4.5. Antidrain Means. - In a wet-hose type device, effective means shall be provided to prevent the drainage of the hose between transactions.

S.4.6. Other Valves. - Check valves and closing mechanisms that are not used to define the measured quantity shall have relief valves (if necessary) to dissipate any abnormally high pressure that may arise in the measuring assembly.

S.5. Markings. - A measuring system shall be legibly and indelibly marked with the following information:

(a) pattern approval mark (i.e., type approval number);

(b) name and address of the manufacturer or his trademark and, if required by the weights and measures authority, the manufacturer's identification mark in addition to the trademark;

(c) model identifier or product name selected by the manufacturer;
(Amended 2006)

(d) nonrepetitive serial number;

*(e) the accuracy class of the meter as specified by the manufacturer consistent with Table T.2.;**
(Added 1994)

(f) maximum and minimum flow rates in pounds per unit of time;

(g) maximum working pressure;

(h) applicable range of temperature if other than -10 °C to +50 °C;

(i) minimum measured quantity; and

(j) product limitations, if applicable.

*[*Nonretroactive as of January 1, 1995.]*

***S.5.1. Location of Marking Information; Retail Motor-Fuel Dispensers**. - The marking information required in General Code, Paragraph G-S.1. Identification shall appear as follows:*

(a) within 60 cm (24 in) to 150 cm (60 in) from the base of the dispenser;

(b) either internally and/or externally provided the information is permanent and easily read; and

(c) on a portion of the device that cannot be readily removed or interchanged (i.e., not on a service access panel).

Note: *The use of a dispenser key or tool to access internal marking information is permitted for retail liquid-measuring devices.*
[Nonretroactive as of January 1, 2003]
(Added 2006)

S.5.2. Marking of Gasoline Volume Equivalent Conversion Factor. - A device dispensing com-pressed natural gas shall have either the statement "1 Gasoline Liter Equivalent (GLE) is Equal to 0.678 kg of Natural Gas" or "1 Gasoline Gallon Equivalent (GGE) is Equal to 5.660 lb of Natural Gas" permanently and conspicuously marked on the face of the dispenser according to the method of sale used.
(Added 1994) (Amended 2006)

S.6. Printer. - When an assembly is equipped with means for printing the measured quantity, the following conditions apply:

(a) the scale interval shall be the same as that of the indicator;

(b) the value of the printed quantity shall be the same value as the indicated quantity;

(c) a quantity for a delivery (other than an initial reference value) cannot be recorded until the measurement and delivery has been completed;

(d) the printer is returned to zero when the resettable indicator is returned to zero; and

(e) the printed values shall meet the requirements applicable to the indicated values.

S.6.1. Printed Receipt. - Any delivered, printed quantity shall include an identification number, the time and date, and the name of the seller. This information may be printed by the device or preprinted on the ticket.

S.7. Totalizers for Retail Motor-Fuel Devices. *- Retail motor-fuel dispensers shall be equipped with a nonresettable totalizer for the quantity delivered through the metering device.*
[Nonretroactive as of January 1, 1998]
(Added 1997)

N. Notes

N.1. Minimum Measured Quantity. - The minimum measured quantity shall be specified by the manufacturer.

N.2. Test Medium.

N.2.1. Liquid-Measuring Devices. - The device shall be tested with the liquid that the device is intended to measure or another liquid with the same general physical characteristics.

N.2.2. Vapor-Measuring Devices. - The device shall be tested with air or the product to be measured.

N.3. Test Drafts. - The minimum test shall be one test draft at the maximum flow rate of the installation and one test draft at the minimum flow rate. More tests may be performed at these or other flow rates. (See T.3.)

N.4. Minimum Measured Quantity. - The device shall be tested for a delivery equal to the declared minimum measured quantity when the device is likely to be used to make deliveries on the order of the minimum measured quantity.

N.5. Motor Fuel Dispenser. - When a device is intended for use as a liquid motor-fuel dispenser, the type evaluation test shall include a test for accuracy using 5 starts and stops during a delivery to simulate the operation of the automatic shut-off nozzle. This test may be conducted as part of the normal inspection and test of the meter.

N.6. Testing Procedures.

N.6.1. Normal Tests. – The normal test of a meter shall be made at the maximum discharge rate developed by the installation. Any additional tests conducted at flow rates down to and including the rated minimum discharge flow rate shall be considered normal tests.
(Added 1999)

N.6.1.1. Repeatability Tests. - Tests for repeatability should include a minimum of three consecutive test drafts of approximately the same size and be conducted under controlled conditions where variations in factors, such as, temperature pressure and flow rate are reduced to the extent that they will not affect the results obtained.
(Added 2001)

N.6.2. Special Tests. – Special tests shall be made to develop the operating characteristics of a device and any special elements and accessories attached to or associated with the device. Any test except as set forth in N.6.1. shall be considered a special test. Special tests of a measuring system shall be made to develop operating characteristics of the measuring systems during a split compartment delivery. (See Table T.2.)
(Added 1999) (Amended 2005)

T. Tolerances

T.1. Tolerances, General

(a) The tolerances apply equally to errors of underregistration and errors of overregistration.

(b) The tolerances apply to all products at all temperatures measured at any flow rate within the rated measuring range of the meter.
(Amended 1999)

T.2. Tolerances. - The tolerances for mass flow meters for specific liquids, gases, and applications are listed in Table T.2.
(Amended 1994 and 1999)

T.3. Repeatability. - When multiple tests are conducted at approximately the same flow rate and draft size, the range of the test results for the flow rate shall not exceed 40 percent of the absolute value of the maintenance tolerance and the results of each test shall be within the applicable tolerance. See also N.6.1.1.
(Amended 1992, 1994 and 2001)

T.4. Type Evaluation Examinations for Liquid-Measuring Devices. - For type evaluation examinations, the tolerance values shall apply under the following conditions:

(a) with any one liquid within the range of liquids,

(b) at any one liquid temperature and pressure within the operating range of the meter, and

(c) at all flow rates within the range of flow rates.
(Added 1993) (Amended 1994)

Table T.2. Accuracy Classes for Mass Flow Meter Applications Covered in NIST Handbook 44, Section 3.37				
Accuracy Class	Application or Commodity Being Measured	Acceptance Tolerance	Maintenance Tolerance	Special Tolerance
0.3	-Large capacity motor-fuel dispensers (maximum discharge flow rates greater than 100 L or 25 gallon per minute) -Heated products -Asphalt at or below a temperature of 50 °C -Loading rack meters -Vehicle-tank meters -Home heating oil -Asphalt at or below 50°C -Milk and other food products -All other liquid applications not shown in the table where the minimum delivery is at least 700 kg (1500 lb)	0.2%	0.3%	0.5%
0.3A	-Asphalt at temperatures greater than 50 °C	0.3%	0.3%	0.5%
0.5	-Small capacity (retail) motor-fuel dispensers -Agri-chemical liquids -All other liquid applications not shown in the table	0.3%	0.5%	0.5%
1.0	-Anhydrous ammonia -LP Gas (including vehicle tank meters)	0.6%	1.0%	1.0%
2.0	-Compressed natural gas as a motor fuel	1.5%	2.0%	2.0%
2.5	-Cryogenic liquid meters -Liquefied compressed gases other than LP Gas	1.5%	2.5%	2.5%

(Added 1994) (Amended 1999 and 2001)

UR. User Requirements

UR.1. Selection Requirements.

UR.1.1. Discharge Hose-Length. *- The length of the discharge hose on a retail motor-fuel device shall not exceed 4.6 m (15 ft) unless it can be demonstrated that a longer hose is essential to permit deliveries to be made to receiving vehicles or vessels.*
[Nonretroactive as of January 1, 1998]
(Added 1997)

UR.1.2. Minimum Measured Quantity.

(a) The minimum measured quantity shall be specified by the manufacturer.

(b) The minimum measured quantity appropriate for a transaction may be specified by the weights and measures authority. A device may have a minimum measured quantity smaller than that specified by the weights and measures authority; however, the device must perform within the performance requirements for the declared minimum measured quantity.

UR.2. Installation Requirements.

UR.2.1. Manufacturer's Instructions. - A device shall be installed in accordance with the manufacturer's instructions, and the installation shall be sufficiently secure and rigid to maintain this condition.
(Added 1997)

UR.2.2. Discharge Rate. - A device shall be installed so that the actual maximum discharge rate will not exceed the rated maximum discharge rate. Automatic means of flow regulation shall be incorporated in the installation if necessary.
(Added 1997)

UR.2.3. Low-Flow Cut-Off Valve. - If a metering system is equipped with a programmable or adjustable "low-flow cut-off" feature:

(a) the low-flow cut-off value shall not be set at flow rates lower than the minimum operating flow rate specified by the manufacturer on the meter; and

(b) the system shall be equipped with flow control valves which prevent the flow of product and stop the indicator from registering product flow whenever the product flow rate is less than the low-flow cut-off value.

(Added 1992)

UR.3. Use of Device.

UR.3.1. Unit Price and Product Identity for Retail Dispensers. - The following information shall be conspicuously displayed or posted on the face of a retail dispenser used in direct sale:

(a) Except for dispensers used exclusively for fleet sales, other price contract sales, and truck refueling (e.g., truck stop dispensers used only to refuel trucks), all of the unit prices at which the product is offered for sale; and

(b) in the case of a computing type or money-operated type, the unit price at which the dispenser is set to compute.

(Added 1993)

UR.3.2. Vapor-Return Line. - During any metered delivery of liquefied petroleum gas and other liquids from a supplier's tank to a receiving container, there shall be no vapor-return line from the receiving container to the supplier's tank:

(a) in the case of any receiving container to which normal deliveries can be made without the use of such vapor-return line, or

(b) in the case of any new receiving container when the ambient temperature is below 90 °F.

(Added 1993)

UR.3.3. Ticket Printer; Customer Ticket. - Vehicle-mounted metering systems shall be equipped with a ticket printer which shall be used for all sales where product is delivered through the meter. A copy of the ticket issued by the device shall be left with the customer at the time of delivery or as otherwise specified by the customer.

(Added 1994) (Amended 2006)

UR.3.4. Printed Ticket. - The total price, the total quantity of the delivery, and the price per unit shall be printed on any ticket issued by a device of the computing type and containing any one of these values.

(Added 1993)

UR.3.5. Ticket in Printing Device. - A ticket shall not be inserted into a device equipped with a ticket printer until immediately before a delivery is begun, and in no case shall a ticket be in the device when the vehicle is in motion while on a public street, highway, or thoroughfare.

(Added 1993)

UR.3.6. Steps After Dispensing. - After delivery to a customer from a retail motor-fuel device:

(a) the starting lever shall be returned to its shutoff position and the zero-set-back interlock engaged; and

(b) the discharge nozzle shall be returned to its designed hanging position unless the primary indicating elements, and recording elements, if the device is equipped and activated to record, have been returned to a definite zero indication.

(Added 1993)

UR.3.7. Return of Indicating and Recording Elements to Zero. - The primary indicating elements (visual), and the primary recording elements when these are returnable to zero, shall be returned to zero immediately before each delivery. Exceptions to this requirement are totalizers on key-lock-operated or other self-operated dispensers and the primary recording element if the device is equipped to record.

(Added 1995) (Amended 1997)

UR.3.8. Return of Product to Storage, Retail Compressed Natural Gas Dispensers. - Provisions at the site shall be made for returning product to storage or disposing of the product in a safe and timely manner during or following testing operations. Such provisions may include return lines, or cylinders adequate in size and number to permit this procedure.

(Added 1998)

Sec. 4.40. Vehicle Tanks Used as Measures

A. Application

A.1. - This code applies to vehicle tanks when these are used as commercial measures.

A.2. - This code does not apply to the following devices:

(a) Devices used solely for dispensing a product in connection with operations in which the amount dispensed does not affect customer charges.

(b) Meters mounted on vehicle tanks (for which see Sec. 3.31; Code for Vehicle-Tank Meters).

A.3. - Also see Sec. 1.10; General Code requirements.

S. Specifications

S.1. Design of Compartments.

S.1.1. Compartment Distortion. - The shell and bulkheads of a vehicle tank shall be so constructed that under any condition of liquid lading they will not become distorted sufficiently to cause a change in the capacity of any compartment (as determined by volumetric test) equal to more than 0.25 L per 750 L (0.5 pt per 200 gal), or fraction thereof, of the nominal compartment capacity, or to more than 0.5 L (1 pt), whichever is greater. (This specification prescribes a limit on permissible distortion only, and is not to be construed as setting up a secondary tolerance on compartment capacities to be added to the values given in tolerance paragraph T.2.)

S.1.2. Venting. - During filling operations, effective venting of a compartment shall be provided to permit air to escape from all spaces designed to be filled with liquid and to permit the influx of air to the compartment during the discharge of liquid therefrom. Venting shall prevent any formation of air pockets.

S.1.3. Completeness of Delivery. - A tank shall be so constructed that, when it is standing on a level surface, complete delivery can be made from any compartment through its delivery faucet or valve whether other compartments are full or empty, and whether or not the delivery is through a manifold.

S.1.4. Fill or Inspection Opening. - The fill or inspection opening of a compartment shall be of such size and location that it can readily be determined by visual inspection that the compartment has been properly filled or completely emptied and shall be so positioned with respect to the ends of the compartment that the indicator may be positioned as required. In no case shall the opening, if circular, have a diameter of less than 20 cm (7-5/8 in), or, if other than circular, have an effective area of less than 290 cm^2 (45 in^2).

S.1.5. Dome Flange and Baffle Plates. - Any dome flange extending into a compartment shall be provided with sufficient perforations or openings flush with the compartment shell to prevent any trapping of air. All baffle plates in a compartment shall be so cut away at top and bottom, and elsewhere as necessary, as to facilitate loading and unloading.

S.1.6. Compartment and Piping Capacities and Emergency Valve. - If a compartment is equipped with an emergency (or safety) valve, this shall be positioned at the lowest point of outlet from the compartment, and the compartment capacity or capacities shall be construed as excluding the capacity of the piping leading therefrom. However, the capacity of the piping leading from such a compartment shall be separately determined and reported, and may be separately marked as specified in S.4.

S.1.6.1. On Vehicle Tanks Equipped for Bottom Loading. - On equipment designed for bottom loading, the compartment capacity shall include the piping of a compartment to the valve located on the upstream side of the manifold and immediately adjacent thereto or, if not manifolded, to the outlet valve, provided that on or immediately adjacent to the marking as specified in S.4. the following words or a statement of similar meaning shall be affixed: "Warning: Emergency valves must be opened before checking measurement."

S.1.7. Expansion Space. - When a compartment is filled to the level of the highest indicator in the compartment, there shall remain an expansion space of at least 0.75 percent of the nominal compartment capacity as defined by that indicator.

S.2. Design of Compartment Indicators.

S.2.1. General. - An indicator shall be so designed that it will distinctly and unmistakably define a capacity point of its compartment when liquid is in contact with the lowest portion of the indicator.

S.2.2. Number of Indicators. - In no case shall a compartment be provided with more than five indicators. (Amended 1972)

S.2.3. Identification of Multiple Indicators. - If a compartment is provided with multiple indicators, each such indicator shall be conspicuously marked with an identifying letter or number.

S.2.4. Location. - An indicator shall be located:

(a) midway between the sides of its compartment;

(b) as nearly as practicable midway between the ends of its compartment, and in no case offset by more than 10 percent of the compartment space or 15 cm (6 in), whichever is less;

(c) so that it does not extend into, nor more than 15 cm (6 in) from, that section of the compartment defined by a vertical projection of the fill opening;
(Amended 1974)

(d) at a depth, measuring from the top of the dome opening, not lower than 46 cm (18 in) for fill openings of less than 38 cm (15 in) in diameter, or, if other than circular, an effective area of less than 1130 cm^2 (175 in^2), and not lower than 61 cm (24 in) for larger fill openings; and

(e) to provide a clearance of not less than 5 cm (2 in) between indicators.
(Amended 1972)

S.2.5. Permanence. - Any indicator that is not intended to remain adjustable and all brackets or supports shall be securely welded in position.

S.2.6. Adjustable Indicators. - Adequate provision shall be made for conveniently affixing a security seal or seals:

(a) to any indicator intended to remain adjustable, so that no adjustment of the indicator can be made without mutilating or destroying the seal, and

(b) to any removable part to which an indicator may be attached, so that the part cannot be removed without mutilating or destroying the seal.

S.2.7. Sensitiveness. - The position of any indicator in its compartment shall be such that at the level of the indicator a change of 1.0 mm (0.04 in) in the height of the liquid surface will represent a volume change of not more than the value of the tolerance for the nominal compartment capacity as defined by that indicator.

S.3. Design of Compartment Discharge Manifold. - When two or more compartments discharge through a common manifold or other single outlet, effective means shall be provided to ensure:

(a) that liquid can flow through the delivery line leading from only one compartment at one time and that flow of liquid from one compartment to any other is automatically prevented, or

(b) that all compartments will discharge simultaneously.

If the discharge valves from two or more compartments are automatically controlled so that they can only be operated together, thus effectively connecting these compartments to one another, such compartments shall, for purposes of this paragraph, be construed to be one compartment.

S.4. Marking of Compartments.

S.4.1. Compartment Identification. - Each compartment of a multiple-compartment tank shall be conspicuously identified by a letter or number marked on the dome or immediately below the fill opening. Such letters or numbers shall be in regular sequence from front to rear, and the delivery faucets or valves shall be marked to correspond with their respective compartments.

S.4.2. Compartment Capacity, Single Indicator. - A compartment provided with a single indicator shall be clearly, permanently, and conspicuously marked with a statement of its capacity as defined by its indicator.

S.4.3. Compartment Capacity, Multiple Indicators. A compartment provided with two or more indicators shall be clearly, permanently, and conspicuously marked with a statement identifying:

(a) each indicator by a letter or number and, immediately adjacent thereto,

(b) the capacity of the compartment as defined by the particular indicator.

N. Notes

N.1. Test Liquid. - Water or light fuel oil shall be used as the test liquid for a vehicle-tank compartment.

N.2. Evaporation and Volume Change. - Care shall be exercised to reduce to a minimum, evaporation losses and volume changes resulting from changes in temperature of the test liquid.

N.3. To Deliver. - A vehicle-tank compartment shall be gauged "to deliver." If the compartment is gauged by measuring the test liquid into the tank, the inside tank walls shall first be thoroughly wetted.

N.4. Gauging of Compartments. - When a compartment is gauged to determine the proper position for an indicator or to determine what a capacity marking should be, whether on a new vehicle tank or following repairs or modifications that might affect compartment capacities, tolerances are not applicable, and the indicator shall be set and the compartment capacity shall be marked as accurately as practicable.

N.5. Adjustment and Remarking. - When a compartment is found upon test to have an error in excess of the applicable tolerance, the capacity of the compartment shall be adjusted to agree with its marked capacity, or its marked capacity shall be changed to agree with its capacity as determined by the test.

T. Tolerances

T.1. Application.

T.1.1. To Excess and to Deficiency. - The tolerances hereinafter prescribed shall be applied to errors in excess and in deficiency.

T.2. Tolerance Values. - Maintenance and acceptance tolerances shall be as shown in Table 1.

UR. User Requirements

UR.1. Conditions of Use.

UR.1.1. Filling. - A vehicle shall stand upon a level surface during the filling of a compartment.

UR.1.2. Delivering. - During a delivery, a vehicle shall be so positioned as to assure complete emptying of a compartment. Each compartment shall be used for an individual delivery only; that is, an individual delivery shall consist of the entire contents of a compartment or compartments.
(Amended 1976)

Table 1.
Maintenance and Acceptance Tolerances
on Vehicle Tank Compartments

Nominal Capacity of Compartment	Maintenance and acceptance tolerance	
Gallons	Expressed in quarts	Expressed in gallons
200 or less	2	0.5
201 to 400, inclusive	3	0.75
401 to 600, inclusive	4	1.0
601 to 800, inclusive	5	1.25
801 to 1000, inclusive	6	1.50
over 1000	Add 1 quart per 200 gallons or fraction thereof	Add 0.25 gallons per 200 gallons or fraction thereof

[THIS PAGE LEFT INTENTIONALLY BLANK]

Sec. 4.41. Liquid Measures

A. Application

A.1. - This code applies to liquid measures; that is, to rigid measures of capacity designed for general and repeated use in the measurement of liquids.

A.2. - The code does not apply to test measures or other volumetric standards.

A.3. - See also Sec. 1.10; General Code requirements.

S. Specifications

S.1. Units.

(a) The capacity of a liquid measure shall be 0.1 L, 0.2 L, 0.5 L, 1 L, 2 L, 5 L, or a multiple of 5 L, and the measure shall not be subdivided.

(b) The capacity of a liquid measure shall be 1 gill, 1/2 liquid pint, 1 liquid pint, 1 liquid quart, 1/2 gallon, 1-1/4 gallon, 1-1/2 gallon, or a multiple of 1 gallon, and the measure shall not be subdivided. However, 3-pint and 5-pint brick molds and 2-1/2 gallon (10 quart) cans shall be permitted when used exclusively for ice cream.

S.2. Material. - Measures shall be made of metal, glass, earthenware, enameled ware, composition, or similar and suitable material. If made of metal, the thickness of the metal shall not be less than the appropriate value given in Table 1.

S.3. Capacity Point. - The capacity of a measure shall be determined to a definite edge, or to the lowest portion of a plate, bar, or wire, at or near the top of the measure, and shall not include the capacity of any lip or rim that may be provided.

S.4. Reinforcing Rings. - Reinforcing rings, if used, shall be attached to the outside of the measure and shall show no divisions or lines on the inside surface of the measure.

S.5. Discharge. - A measure equipped with a discharge faucet or valve shall be susceptible to complete discharge through the faucet or valve when the measure is standing on a level surface.

S.6. Marking Requirements. - A measure shall be marked on its side with a statement of its capacity. If the capacity is stated in terms of the pint or quart, the word “Liquid” or the abbreviation “Liq” shall be included.

T. Tolerances

T.1. - Maintenance tolerances in excess and in deficiency shall be as shown in Table 2. Acceptance tolerances shall be one-half the maintenance tolerances.

Table 1.
Minimum Thickness of Metal for Liquid Measures

Nominal capacity	Minimum thickness	
	For iron or steel, plated or unplated (inch)	For copper or aluminum (inch)
1 pint or less	0.010	0.020
1 quart, 1/2 gallon, 1 gallon	0.014	0.028
Over 1 gallon	0.016	0.032

4.41. Liquid Measures

Table 2. Maintenance Tolerances, in Excess and in Deficiency, for Liquid Measures				
Nominal capacity	Tolerance			
	In excess		In deficiency	
	fluid drams	cubic inches	fluid drams	cubic inches
1/2 pint or less	2	0.4	1.0	0.2
1 pint	3	0.7	1.5	0.3
1 quart	4	0.9	2.0	0.5
1/2 gallon	6	1.4	3.0	0.7
	fluid ounces			
1 and 1-1/4 gallons	1.0	1.8	4.0	0.9
1-1/2 gallons	1.5	2.7	6.0	1.4
			fluid ounces	
2 gallons	2	3.5	1	1.8
3 and 4 gallons	4	7.0	2	3.6
5 gallons	6	11.0	3	5.4
10 gallons	10	18.0	5	9.0

Sec. 4.42. Farm Milk Tanks

A. Application

A.1. - This code applies to farm milk tanks on the premises of producers when these are used, or are to be used, for the commercial measurement of milk.

A.2. - This code does not apply to tanks mounted on highway vehicles.

A.3. - See also Sec. 1.10; General Code requirements.

S. Specifications

S.1. Components. - A farm milk tank, whether stationary or portable, shall be considered suitable for commercial use only when it comprises:

(a) a vessel, whether or not it is equipped with means for cooling its contents;

(b) means for reading the level of liquid in the tank, such as a removable gauge rod or surface gauge; and

(c) a chart for converting level-of-liquid readings to volume.

Each compartment of a subdivided tank shall, for the purposes of this code, be construed to be a farm milk tank.

S.2. Design of Tank.

S.2.1. Level. - A farm milk tank shall be designed to be in normal operating position when it is in level. The tank shall be so constructed that it will maintain its condition of level under all normal conditions of lading.

S.2.2. Level-Indicating Means. - A tank shall be permanently equipped with sensitive means by which the level of the tank can be determined.

S.2.2.1. On a Stationary Tank. - A stationary tank shall be provided with such level-indicating means as a two-way or circular level, a plumb bob, two-way leveling lugs, or the like; or the top edge or edges of the tank shall be so constructed throughout as to provide an accurate reference for level determinations; provided, that when leveling lugs or the top edge or edges of the tank are used as the reference for level determinations, there shall be supplied with the tank a sensitive spirit level of appropriate dimensions, and the positions where such level is intended to be used shall be permanently marked on the reference surface of the tank; and provided further, that when leveling lugs are used they shall be so designed, constructed, and installed at the factory that any alteration of the original position or condition, such as by hammering or filing, would be difficult and would become obvious. A stationary tank with a nominal capacity of 2 000 L or 500 gal, or greater shall be provided with at least two similar level-indicating means, and these shall be located in opposite and distant positions from each other to facilitate an accurate level determination in both directions of the tank's horizontal plane.
(Amended 1980)

S.2.2.2. On a Portable Tank. - A portable tank shall be provided with either a two-way or a circular level.

S.2.3. Portable Tank. - A portable tank shall be of the center-reading type; that is, it shall be so designed that the gauge rod or surface gauge, when properly positioned for use, will be approximately in the vertical axis of the tank, centrally positioned with respect to the tank walls.

S.2.4. Capacity. - *A farm milk tank shall be clearly and permanently marked on a surface visible after installation with its capacity as determined by the manufacturer. The capacity shall not exceed an amount that can be agitated without overflowing and that can be measured accurately with the liquid at rest.*
[Nonretroactive as of 1979.]

S.3. Design of Indicating Means.

S.3.1. General. - *A tank shall include indicating means and shall be calibrated over the entire range of the volume of the tank from 5 percent of capacity or 2 m^3 (500 gal) whichever is less, to its maximum capacity.*
[Nonretroactive as of January 1, 1986.]
(Added 1985)

S.3.2. Gauge-Rod Bracket or Supports. - If a tank is designed for use with a gauge rod, a substantial and rigid gauge-rod bracket or other suitable supporting elements for positioning the gauge rod shall be provided. A gauge rod and its brackets or other supporting elements shall be so constructed that, whenever the rod is placed in engagement with the bracket or supports and released, the rod will automatically seat itself at a fixed height and

in a vertical position. When a gauge rod is properly seated on its brackets or supports, there shall be a clearance of at least 7.5 cm (3 in) between the graduated face of the rod and any tank wall or other surface that it faces.

S.3.3. Gauge Rod. - When properly seated in position, a rod shall not touch the bottom of the tank unless this is required by the design of the supporting elements. The rod shall be graduated throughout an interval corresponding to the volume range within which readings of liquid level are to be made.

S.3.4. Surface-Gauge Bracket or Supports. - If a tank is designed for use with a surface gauge, a substantial and rigid surface-gauge bracket or other suitable supporting elements for positioning the surface gauge shall be provided. A surface gauge and its brackets or other supporting elements shall be so constructed that, whenever the gauge assembly is placed in engagement with the bracket or supports, the indicator, if not permanently mounted on the tank, will automatically seat itself in correct operating position, and the graduated element will be vertically positioned and will be securely held at any height to which it may be manually set.

S.3.5. Surface Gauge. - When properly engaged with its bracket and set to its lowest position, a surface gauge shall not touch the bottom of the tank. The gauge shall be graduated throughout an interval corresponding to the volume range within which readings of liquid level are to be made.

S.3.6. External Gauge Assemblies. (Added 1977)

S.3.6.1. Design and Installation. - The gauge assembly shall be designed to meet sanitary requirements and shall be readily accessible for cleaning purposes. The gauge assembly shall be mounted in a vertical position and equipped with a sliding mechanism to assist in determining the liquid level.

S.3.6.2. Gauge Tube. - The gauge tube shall be borosilicate glass or approved rigid plastic or rigidly supported flexible tubing with a uniform internal diameter not less than 2 cm (3/4 in). It shall be designed and constructed so that all product in the gauge can be discarded in such a manner that no product in the gauge tube will enter the discharge line or tank.
(Amended 1983)

S.3.6.3. Scale Plate. - The scale plate shall be mounted adjacent to and parallel with the gauge tube and be no more than 7 mm (1/4 in) from the tube.

S.3.6.4. Scale Graduations. - The graduation lines shall be clear and easily readable and shall comply with the requirements of paragraphs included under S.3.7. Graduations.

S.3.6.5. Venting. - An external gauge tube shall be adequately vented at the top, open to the atmosphere. Any attachment to the gauge tube shall not adversely affect the operation of this vent.
(Added 1984)

S.3.7. Graduations.

S.3.7.1. Spacing and Width of Graduations. - On a gauge rod or surface gauge, the spacing of the graduations, center to center, shall be not more than 1.6 mm (0.0625 in or 1/16 in) and shall not be less than 0.8 mm (0.03125 in or 1/32 in). The graduations shall not be less than 0.12 mm (0.005 in) in width, and the clear interval between adjacent edges of successive graduations shall be not less than 0.4 mm (0.015625 in or 1/64 in).

S.3.7.2. Values of Graduations. - On a gauge rod or surface gauge, the graduations may be designated in inches or in centimeters and fractions thereof, or may be identified in a numerical series without reference to inches or centimeters or fractions thereof. In either case, a volume chart shall be provided for each such rod or gauge and each tank with which it is associated, showing values in terms of the graduation on the rod or gauge. If a rod or gauge is associated with but one tank, in lieu of linear or numerical series graduations and volume chart, values in terms of volume of liquid in the tank may be shown directly on the rod or gauge.

S.3.7.3. Value of Graduated Interval. - The value of a graduated interval on a gauge rod or surface gauge (exclusive on the interval from the bottom of the tank to the lowest graduation) shall not exceed:

(a) 2 L for a tank of a nominal capacity of 1 000 L or less; 1/2 gal for a tank of a nominal capacity of 250 gal or less;

(b) 4 L for a tank of a nominal capacity of 1 001 to 2 000 L, inclusive; 1 gal for a tank of a nominal capacity of 251 to 500 gal, inclusive,

(c) 6 L for a tank of a nominal capacity of 2 001 to 6 000 L, inclusive; 1-1/2 gal for a tank of a nominal capacity of 501 to 1 500 gal, inclusive,

(d) 8 L for a tank of a nominal capacity of 6 001 to 10 000 L, inclusive; 2 gal for a tank of a nominal capacity of 1 501 to 2 500 gal, inclusive,

(e) 8 L plus 4 L for each additional 10 000 L or fraction thereof, for tanks of nominal capacity above 10 000 L or 2 gal plus 1 gal for each additional 2 500 gal or fraction thereof, for tanks with nominal capacity above 2 500 gal.

(Amended 1980)

S.3.8. Design of Indicating Means on Tanks with a Capacity Greater than 8 000 Liters or 2 000 gallon. - *Any farm milk tank with a capacity greater than 8 000 L, or 2 000 gal, shall be equipped with an external gauge assembly.*
[Nonretroactive and applicable only to tanks manufactured after January 1, 1981.]
(Added 1980)

S.4. Design of Volume Chart.

S.4.1. General. - A volume chart shall show volume values only, *over the entire range of the volume of the tank from 5 percent of capacity or 2 m^3 (500 gal) whichever is less, to its maximum capacity.** All letters and figures on the chart shall be distinct and easily readable. The chart shall be substantially constructed, and the face of the chart shall be so protected that its lettering and figures will not tend easily to become obliterated or illegible.
*[*Nonretroactive as of January 1, 1986.]*
(Amended 1985)

S.4.2. For a Tank of 1 000 Liters, or 250 Gallons, or Less. - The volume chart for a tank of nominal capacity of 1 000 L, or 250 gal, or less shall show values at least to the nearest 1 L, or 1/4 gal.

S.4.3. For a Tank of 1 001 to 2 000 Liters, or 251 to 500 Gallons. - The volume chart for a tank of nominal capacity of 1 001 to 2 000 L, or 251 to 500 gal, inclusive, shall show values at least to the nearest 2 L, or 1/2 gal.

S.4.4. For a Tank of Greater than 2 000 Liters, or 500 Gallons. - The volume chart for a tank of nominal capacity of greater than 2 000 L, or 500 gal, shall show values at least to the nearest gallon, or 4 L.
(Amended 1980)

S.5. Gauging.

S.5.1. Level. - A farm milk tank shall be level, as shown by the level-indicating means, during the original gauging operation.

S.5.2. To Deliver. - A farm milk tank shall be originally gauged "to deliver." If the tank is gauged by measuring the test liquid into the tank, the inside tank walls shall first be thoroughly wetted and the tank shall then be drained for 30 seconds after the main drainage flow has ceased.

S.5.3. Preparation of Volume Chart. - When a tank is gauged for the purposes of preparing a volume chart, tolerances are not applicable, and the chart shall be prepared as accurately as practicable.

S.6. Identification. - A tank and any gauge rod, surface gauge, spirit level, and volume chart intended to be used therewith shall be mutually identified, as by a common serial number, in a prominent and permanent manner.

N. Notes

N.1. Test Liquid. - Water shall be used as the test liquid for a farm milk tank.

N.2. Evaporation and Volume Change. - Care shall be exercised to reduce to a minimum, evaporation losses and volume changes resulting from changes in temperature of the test liquid.

N.3. To Deliver. - A farm milk tank shall be tested "to deliver." If the tank is gauged by measuring the test liquid delivered into the tank, the inside tank walls shall first be thoroughly wetted and the tank then shall be drained for 30 seconds after the main drainage flow has ceased.

N.4. Level. - A farm milk tank shall be level, as shown by the level-indicating means, during gauging and testing.

N.5. Test Methods. - Acceptance tests of milk tanks may be of either the prover method or the master meter method provided that the master metering system is capable of operating within 25 percent of the applicable tolerance found in T.3. Subsequent tests may be of either the prover method or the master meter method provided that the master metering system is capable of operating within 25 percent of the applicable tolerance found in T.4.

N.5.1. Verification of Master Metering Systems. - A master metering system used to gauge a milk tank shall be verified before and after the gauging process. A master metering system used to calibrate a milk tank, shall be verified before starting the calibration and reverified at least every quarter of the tank capacity, or every 2000 L (500 gal), whichever is greater.
(Added 2001)

N.5.2. Temperature Changes in Water Supply. - When using a master metering system to gauge or calibrate a milk tank, the official shall monitor the temperature of the water before and after changing sources of supply. If the water temperature of the new source changes by more than 2.8 °C (5 °F) from the previous supply, the official shall reverify the accuracy of the master metering system as soon as possible after the system reaches temperature equilibrium with the new supply source.
(Added 2001)

N.6. Reading the Meniscus. - When a reading or setting is to be obtained from a meniscus formed by milk or other opaque liquid, the index or reading line is the position of the highest point of the center of the meniscus. When calibrating a device with water and the device is to be used with an opaque liquid, the reading should be obtained accordingly; that is, the position of the highest point of the center of the meniscus.
(Added 1984)

T. Tolerances

T.1. Application. - The tolerances hereinafter prescribed shall be applied equally to errors in excess and errors in deficiency.

T.2. Minimum Tolerance Values. - On a particular tank, the maintenance and acceptance tolerance applied shall be not smaller than the volume corresponding to the graduated interval at the point of test draft on the indicating means or one-half gal, or 2 L, whichever is greater.
(Amended 1980)

T.3. Basic Tolerance Values. - The basic maintenance and acceptance tolerance shall be 0.2 percent of the volume of test liquid in the tank at each test draft.
(Amended 1975)

T.4. Basic Tolerance Values, Master Meter Method. - The basic maintenance and acceptance tolerance for tanks tested by the master meter method shall be 0.4 percent of the volume of test liquid in the tank at each test draft.
(Added 1975)

UR. User Requirements

UR.1. Installation. - A stationary tank shall be rigidly installed in level without the use of removable blocks or shims under the legs. If such tank is not mounted permanently in position, the correct position on the floor for each leg shall be clearly and permanently defined.

UR.2. Level Condition.

UR.2.1. Stationary Tank. - A stationary farm milk tank shall be maintained in level.

UR.2.1.1. Leveling Lugs. - If leveling lugs are provided on a stationary tank, such lugs shall not be hammered or filed to establish or change a level condition of the tank.

UR.2.2. Portable Tank. - On a portable tank, measurement readings shall be made only when the tank is approximately level; that is, when it is not out-of-level by more than 5 percent or approximately 3 degrees in any direction.

UR.3. Weight Chart. - An auxiliary weight chart may be provided, on which shall be prominently displayed the weight per unit volume value used to derive the weight values from the official volume chart.

UR.4. Use. - A farm milk tank shall not be used to measure quantities greater than an amount that can be agitated without overflowing.

4002.7. Farm Milk Tanks.

(a) Calibration at Installation. Any farm milk tank exceeding 1,000 gallons capacity installed or relocated after January 1, 1982 shall be calibrated at the farm and a volume chart prepared before the acceptance test is performed.

Sec. 4.43. Measure-Containers

A. Application

A.1. - This code applies to measure-containers, including lids or closures if such are necessary to provide total enclosure of the measured commodity, as follows:

(a) Retail measure-containers intended to be used only once to determine at the time of retail sale, and from bulk supply, the quantity of commodity on the basis of liquid measure. The retail measure-container serves as the container for the delivery of the commodity.

(b) Prepackaged measure-containers intended to be used only once to determine in advance of sale the quantity of a commodity (such as ice cream, ice milk, or sherbet) on the basis of liquid measure. The prepackaged measure-container serves as the container for the delivery of the commodity, in either a wholesale or a retail marketing unit.

A.2. - This code does not apply to rigid containers used for milk, cream, or other fluid dairy products, which are covered by packaging requirements.

A.3. - See also Sec. 1.10; General Code requirements.

S. Specifications

S.1. Units. - The capacity of a measure-container shall be a multiple of or a binary submultiple of a quart or a liter, and the measure shall not be subdivided. However, for prepackaged measure-containers, any capacity less than 1/4 L or 1/2 liquid pint shall be permitted.
(Amended 1979)

S.2. Capacity Point. - The capacity of a measure-container shall be sharply defined by:

(a) the top edge,

(b) a line near the top edge, or

(c) the horizontal cross-sectional plane established by the bottom surface of the removable lid or cap when seated in the container.

S.3. Shape. - A measure-container shall be designed as some suitable geometrical shape, and its capacity shall be determined without distortion from its normal assembled shape.

S.4. Marking.

S.4.1. Capacity Point. - If the capacity point of a measure-container is defined by a line, the container shall be marked conspicuously on its side with a suitable statement clearly identifying this line as the capacity point.

S.4.2. Capacity Statement. - A measure-container shall be clearly and conspicuously marked with a statement of its capacity in terms of one of the units prescribed in S.1.

N. Notes

N.1. Test Liquid. - Water shall be used as the test liquid for a measure-container.

N.2. Preparation of Container for Test.

N.2.1. General. - Before an actual test is begun, a measure-container shall, if necessary, be so restrained that it will maintain its normal assembled shape and that its sides will not bulge when it is filled with water.

N.2.2. Restraining Form for Test.

N.2.2.1. For Rectangular Containers of One Liter, One Quarter Less. - Bulging of the sides of a rectangular measure-container of 1-liter (1-quart) capacity or less may be controlled by holding against each side of the container, with a cord, rubber bands, or tape, a metal plate or a piece of heavy cardboard slightly smaller than the side of the container.
(Amended 1979)

N.2.2.2. For Rectangular Prepackaged Measure-Container of Two Quarts or Two Liters or Greater. - A rectangular prepackaged measure-container of 2-liter (2-quart) capacity or greater shall be supported during a test by a rigid restraining form. This form shall restrain not less than the entire area of the central two-thirds of each side of the container, measured from bottom to top. The inside width dimension of any side panel of the restraining form shall be 1.6 mm (1/16 in) greater than the corresponding outside dimension of the container. (The outside width dimension of any side panel of the container shall be established by

adding to the inner side center-of-score to center-of-score dimension two thicknesses of the board used, and the sum thus obtained shall be rounded off to the nearest 0.4 mm (1/64 in).
(Amended 1979)

T. Tolerances

T.1. Tolerances on an Individual Measure. - The acceptance tolerances in excess and in deficiency on an individual measure shall be as shown in Table 1.

T.2. Tolerance on Average Capacity. - The average capacity on a random sample of ten measures selected from a lot of 25 or more shall be equal to or greater than the nominal capacity.
(Amended 1979)

UR. User Requirements

UR.1. - Limitation of Use. - The use of a measure-container with a rectangular cross section of a capacity of 2 qt or 2 L or greater shall be limited to the packaging, in advance of sale, of ice cream, sherbet, or other similar frozen desserts.
(Amended 1979)

Table 1.
Acceptance Tolerances,
in Excess and in Deficiency, for Measure-Containers

Nominal Capacity	Tolerance			
	In excess		In deficiency	
	milliliters		milliliters	
1/4 liter or less	10		5.0	
1/2 liter	15		7.5	
1 liter	20		10.0	
Over 1 liter	Add per liter 10 milliliters		Add per liter 5.0 milliliters	
	fluid drams	cubic inches	fluid drams	cubic inches
1/2 pint or less	3	0.6	1.5	0.3
1 pint	4	1.0	2.0	0.5
1 quart	6	1.4	3.0	0.7
2 quarts	9	2.0	4.5	1.0
3 quarts	10	2.4	5.0	1.2
4 quarts	12	2.8	6.0	1.2
Over 4 quarts	Add per quart 3 fluid drams	Add per quart 0.7 cubic inch	Add per quart 1.5 fluid drams	Add per quart 0.35 cubic inch

Sec. 4.44. Graduates

A. Application

A.1. - This code applies to subdivided glass measures of capacity, either cylindrical or conical in shape.

A.2. - See also Sec. 1.10; General Code requirements.

S. Specifications

S.1. Units. - Nominal capacities, graduation ranges, values of graduated intervals, and numbered graduations applicable to single-scale graduates and to the appropriate portions of double-scale graduates shall be as shown in Table 1.

Table 1.
Design Details for Graduates

Nominal capacity	To be graduated between	Value of graduated intervals	Number at each graduation divisible by
Milliliters	Milliliters	Milliliters	Milliliters
5	1 and 5	1/2	1
10	2 and 10	1	2
25	5 and 25	5	5
50	10 and 50	5	10
100	20 and 100	10	20
500	100 and 500	25	50
1 000	200 and 1 000	50	100
Minims	Minims	Minims	Minims
60	15 and 60	5	10[a]
120	30 and 120	10	20[b]
Fluid drams	Fluid drams	Fluid drams	Fluid drams
4	1 and 4	1/2	1
8	2 and 8	1	2
Fluid ounces	Fluid ounces	Fluid ounces	Fluid ounces
2	1/2 and 2	1/4	1/2
4	1 and 4	1/2	1
8	2 and 8	1/2	1
16	4 and 16	1	2
32	8 and 32	2	4

[a] And, in addition, at the first (15-minim) graduation.
[b] And, in addition, at the first (30-minim) graduation.

S.2. Initial Interval. - A graduate shall have an initial interval that is not subdivided, equal to not less than one-fifth and not more than one-fourth of the capacity of the graduate.

S.3. Shape. - A graduate of a capacity of more than 15 mL (4 fluid drams) may be of either the cylindrical or circular conical type. A graduate of a capacity of 15 mL (4 fluid drams) or less shall be of the single-scale cylindrical type.

S.4. Material. - A graduate shall be made of good-quality, thoroughly annealed, clear, transparent glass, free from bubbles and streaks that might affect the accuracy of measurement. The glass shall be uniform in thickness and shall not be excessively thick.

S.5. Dimensional Proportions

S.5.1. On a Circular Conical Graduate. - The inside measurement from the bottom of a circular conical graduate to the capacity graduation shall be not less than two times the inside diameter at the capacity graduation. The inside measurement from the bottom of the graduate to the point representing one-fourth of the capacity shall be not less than the inside diameter at that point.

S.5.2. On a Cylindrical Graduate. - The inside measurement from the bottom of a cylindrical graduate to the capacity graduation shall be not less than five times the inside diameter at the capacity graduation.

S.6. Base. - The base of the graduate shall be perpendicular to the vertical axis of the graduate. The diameter of the base shall be of such size that the empty graduate will remain standing on an inclined surface of 25 percent, or approximately 15 degrees, from the horizontal.

S.7. Design of Graduations

S.7.1. General. - Graduations shall be perpendicular to the vertical axis of the graduate and parallel to each other. Graduations shall be continuous, of uniform thickness not greater than 0.4 mm (0.015 in), clearly visible, permanent, and indelible under normal conditions of use.
(Amended 1977)

S.7.2. On a Single-Scale Graduate. - On a single-scale graduate, the main graduations shall completely encircle the graduate and subordinate graduations shall extend at least one-half the distance around the graduate.

S.7.3. On a Double-Scale or a Duplex Graduate. - On a double-scale or duplex graduate, there shall be a clear space between the ends of the main graduations on the two scales, and this space shall be approximately 90 degrees from the lip of the graduate and shall conform to the requirements of Table 2.

Table 2.
Clear Space Between Ends of Main Graduations on Double-Scale Graduates

Inside diameter of graduate at the graduations (inches)	Clear space between ends of main graduations (inch)
Less than 1.5	1/8 to 1/4
1.5 to 3, inclusive	1/4 to 1/2
Over 3	3/8 to 5/8

S.8. Basis of Graduation. - A graduate shall be graduated "to deliver" when the temperature of the graduate is 20 °C (68 °F), and shall be marked accordingly in a permanent and conspicuous manner.

S.9. Marking Requirements. - Each main graduation shall be marked to show its value. Intermediate graduations shall not be marked. Value figures shall be uniformly positioned either directly upon or immediately above the graduations to which they refer. Figures placed upon graduations shall be set in from the ends of the graduations a sufficient distance to allow the ends of the graduations to be used in making a setting.

N. Notes

N.1. Test Liquid. - Water shall be used as the test liquid for graduates.

N.2. Temperature Control. - During the test of a graduate, appropriate precautions shall be exercised to reduce any detrimental temperature effects to the practicable minimum.

T. Tolerances

T.1. - Maintenance and acceptance tolerances in excess and in deficiency shall be as shown in Table 3 for graduates that are graduated "to contain" or "to deliver." (The tolerance to be applied at any graduation is determined by the inside diameter of the graduate at the graduation in question.)

Table 3. Maintenance and Acceptance Tolerances, in Excess and in Deficiency, for Graduates					
Inside diameter of graduate		Tolerance	Inside diameter of graduate		Tolerance
From	to but not including		From	to but not including	
millimeters		milliliters	inches		minims
0	16	0.1	0	9/16	2
16	21	0.2	9/16	13/16	3
21	26	0.4	13/16	1 1/16	6
26	31	0.6	1 1/16	1 5/16	10
31	36	0.8	1 5/16	1 9/16	15
36	41	1.1	1 9/16	1 13/16	20
41	46	1.4	1 13/16	2 1/16	30
46	51	1.8	2 1/16	2 5/16	40
51	56	2.2	2 5/16	2 9/16	50
56	61	2.8	2 9/16	2 13/16	65
61	66	3.4	2 13/16	3 1/16	80
66	71	4.1	3 1/16	3 5/16	95
71	76	4.8	3 5/16	3 9/16	110
76	81	5.6	3 9/16	3 13/16	130
81	86	6.4	3 3/16	4 1/16	150
86	91	7.2			
91	96	8.1			
96	101	9.0			

(Amended 1974)

[THIS PAGE LEFT INTENTIONALLY BLANK]

Sec. 4.45. Dry Measures

A. Application

A.1. - This code applies to rigid measures of capacity designed for general and repeated use in the measurement of solids, including capacities of 1/2 bushel or more.

A.2. - This code does not apply to "standard containers" used for the measurement of fruits and vegetables and as shipping containers thereof.

A.3. - This code does not apply to berry baskets and boxes (for which, see Sec. 4.46., Code for Berry Baskets and Boxes). (Added 1976)

A.4. - See also Sec. 1.10., General Code requirements.

S. Specifications

S.1. Units. - The capacity of a measure shall be 1 bushel, a multiple of the bushel, or a binary submultiple of the bushel, and the measure shall not be subdivided or double-ended.

S.2. Material. - A dry measure shall be made of any suitable material that will retain its shape during normal usage.

S.3. Shape. - A measure, other than a basket, of a capacity of 1/2 bushel or less, shall be cylindrical or conical in shape. The top diameter shall in no case be less than the appropriate minimum diameter shown in Table 1. The bottom of a measure, other than a basket, shall be perpendicular to the vertical axis of the measure and shall be flat, except that a metal bottom may be slightly corrugated. The bottom of a measure shall not be adjustable or movable.

Table 1.
Minimum Top Diameters for Dry Measures
Other Than Baskets

Nominal capacity	Minimum top diameter inches
1 pint	4
1 quart	5 3/8
2 quarts	6 5/8
1/2 peck	8 1/2
1 peck	10 7/8
1/2 bushel	13 3/4

S.3.1. Conical Dry Measure. - If conical, the top diameter shall exceed the bottom diameter by not more than 10 percent of the bottom diameter.

S.4. Capacity Point. - The capacity of a measure shall be determined by the top edge of the measure.

S.5. Top Reinforcement. - The top edge of a measure shall be reinforced. On a wooden measure other than a basket, of a capacity of 1 quart or more, this reinforcement shall be in the form of a firmly attached metal band.

S.6. Marking Requirements. - A measure shall be conspicuously marked on its side with a statement of its capacity. If the capacity is stated in terms of the pint or quart, the word "Dry" shall be included. The capacity statement shall be in letters of the following dimensions:

(a) At least 1/2 inch high and 1/4 inch wide on a measure of any capacity between 1/2 pint and 1 peck.

(b) At least 1 inch high and 1/2 inch wide on a measure of a capacity of 1/2 bushel or more.

(c) On a measure of a capacity of 1/4 pint or less, the statement shall be as prominent as practicable, considering the size and design of such measure.

N. Notes

N.1. Testing Medium.

N.1.1. Watertight Dry Measures. - Water shall be used as the testing medium for watertight dry measures.

N.1.2. Nonwatertight Dry Measures. - A dry measure shall be tested either volumetrically using rape seed as a testing medium or geometrically through inside measurement and calculation.
(Amended 1988)

T. Tolerances

T.1. - Maintenance tolerances in excess and in deficiency shall be as shown in Table 2. Acceptance tolerances shall be one-half the maintenance tolerances.

Table 2. Maintenance Tolerances, in Excess and in Deficiency, for Dry Measures		
Nominal capacity	Tolerance	
	In excess cubic inches	In deficiency cubic inches
1/32 pint or less	0.1	0.05
1/16 pint	0.15	0.1
1/8 pint	0.25	0.15
1/4 pint	0.5	0.3
1/2 pint	1.0	0.5
1 pint	2.0	1.0
1 quart	3.0	1.5
2 quarts	5.0	2.5
1/2 peck	10.0	5.0
1 peck	16.0	8.0
1/2 bushel	30.0	15.0
1 bushel	50.0	25.0

Sec. 4.46. Berry Baskets and Boxes

A. Application

A.1. - This code applies to baskets and boxes for berries and small fruits in capacities of 1 dry quart and less.

A.2. - See also Sec. 1.10; General Code requirements.

S. Specifications

S.1. Units. - The capacity of a berry basket or box shall be 1/2 dry pint, 1 dry pint, or 1 dry quart.

S.2. Materials. - A berry basket or box shall be made of any suitable materials that will retain its shape during normal filling, storage, and handling.

S.3. Capacity Point. - The capacity of a berry basket or box shall be determined by its top edges.

N. Notes

N.1. Method of Test. - A berry basket or box may be tested either volumetrically, using rape seed as the testing medium, or geometrically through accurate inside dimension measurement and calculation.

T. Tolerances

T.1. Tolerances on Individual Measures. - Maintenance and acceptance tolerances in excess and deficiency on an individual measure shall be as shown in Table 1.

T.2. Tolerances on Average Capacity. - The average capacity on a random sample of 10 measures selected from a lot of 25 or more shall be equal to or greater than the nominal capacity.
(Amended 1979)

Table 1.
Maintenance and Acceptance Tolerances
in Excess and in Deficiency

Nominal capacity	Tolerance	
	In excess cubic inches	In deficiency cubic inches
1/2 pint	1	0.5
1 pint	2	1.0
1 quart	3	1.5

[THIS PAGE LEFT INTENTIONALLY BLANK]

Sec. 5.50. Fabric-Measuring Devices

A. Application

A.1. - This code applies only to mechanisms and machines designed to indicate automatically (with or without value-computing capabilities) the length of fabric passed through the measuring elements.

A.2. - Insofar as they are clearly appropriate, the requirements and provisions of this code apply also to devices designed for the commercial measurement of other material similar to fabrics, in sheet, roll, or bolt form.

A.3. - See also Sec. 1.10; General Code requirements.

S. Specifications

S.1. Units. - A fabric-measuring device shall indicate lengths in terms of 10 cm (1/8 yd), 25 cm (1/4 yd), 50 cm (1/2 yd), and meters (yd). In addition, lengths may be indicated in terms of any or all of the following subdivisions: 30 cm (1/3 yd), 6 cm (1/16 yd), meters and centimeters (feet and inches). Digital indicators may indicate values in decimal fractions.
(Amended 1977)

S.2. Design of Indicating Elements.

S.2.1. Graduations.

S.2.1.1. Length. - Graduations shall be so varied in length that they may be conveniently read.

S.2.1.2. Width. - In any series of graduations, the width of a graduation shall in no case be greater than the width of the minimum clear interval between graduations, and the width of main graduations shall be not more than 50 percent greater than the width of subordinate graduations. Graduations shall in no case be less than 0.2 mm (0.008 in) in width.

S.2.1.3. Clear Interval Between Graduations. - The clear interval between graduations shall be at least 6 mm for cm graduations (1/4 in) for 1/8-yard graduations), and 3 mm for 20-cm graduations (1/8 inch for 1-inch graduations).

S.2.2. Indicator.

S.2.2.1. Symmetry. - The index of an indicator shall be symmetrical with respect to the graduations, at least throughout that portion of its length associated with the graduations.

S.2.2.2. Length. - The index of an indicator shall reach to the finest graduations with which it is used, unless the indicator and the graduations are in the same plane, in which case the distance between the end of the indicator and the ends of the graduations, measured along the line of the graduations, shall be not more than 1.0 mm (0.04 in).

S.2.2.3. Width. - The index of an indicator shall not be wider than the narrowest graduations with which it is used, and shall in no case exceed 0.4 mm (0.015 in).

S.2.2.4. Clearance. - The clearance between the index of an indicator and the graduations shall in no case be more than 1.5 mm (0.06 in).

S.2.2.5. Parallax. - Parallax effects shall be reduced to the practicable minimum.

S.2.3. Money-Value Computations.

S.2.3.1. Full-Computing Type. - In this type, the money value at each of a series of unit prices shall be computed automatically for every length within the range of measurement of the fabric-measuring device. Value graduations shall be provided and shall be accurately positioned. The value of each graduated interval shall be 1 cent at all prices per yard of 30 cents and less, and shall not exceed 2 cents at higher prices per yard. Five-cent intervals may be represented in the 2-cent range by special graduations, but these shall not be positioned in the clear intervals between graduations of the regular series.

S.2.3.2. Limited-Computing Type. - In this type, the money value at each of a series of unit prices shall be computed automatically only for lengths corresponding to a definite series of length graduations. There shall be no value graduations. At no position that the chart can assume shall two value figures at the same price per yard be completely and clearly exposed to view at one time. Money values shown shall be mathematically accurate, except that a fraction of less than 1/2 cent shall be dropped and the next higher cent shall be shown in the case of a fraction of 1/2 cent or more. One of the following requirements shall be met:

(a) There shall be a money-value computation for each length graduation within the range of measurement of the device.

(b) No money-value computation shall be exposed to view except at such times as the device shows a length indication for which a corresponding series of value indications is computed.

(c) Each column or row of money-value computations shall be marked to show the length to which the computations correspond, the device shall be marked to show the character and limitations of the computations, and there shall be computations corresponding to at least 10 cm (1/8 yd) throughout the range of measurement of the device.

S.2.4. Return to Zero. - Primary indicating elements shall be readily returnable to a definite zero indication. Means shall be provided to prevent the return of the indicating elements beyond their correct zero positions.

S.3. Marking Requirements. - If a device will not accurately measure all fabrics, it shall be marked to indicate clearly its limitations.

S.4. Design Accuracy. - Indications of length and money value shall be accurate whether the values of the indications are being increased or decreased.

N. Notes

N.1. Testing Medium. - A fabric-measuring device shall be tested with a suitable testing tape approximately 7.62 cm (3 in) wide and with a graduated length of at least 11 m (12 yd), made from such material and having such surface finish as to provide dimensional stability and reduce slippage to the practicable minimum.

T. Tolerances

T.1. Tolerance Values. - Maintenance and acceptance tolerances shall be as shown in Table 1.

UR. User Requirements

UR.1. Installation Requirements.

UR.1.1. Installation. - A fabric-measuring device shall be securely supported and firmly fixed in position.

UR.2. Use Requirements.

UR.2.1. Limitation of Use. - A fabric-measuring device shall be used to measure only those fabrics that it was designed to measure, and in no case shall it be used to measure a fabric that a marking on the device indicates should not be measured.

UR.2.2. Return of Indicating Elements to Zero. - The primary indicating elements shall be returned to zero before each measurement.

Table 1.
Maintenance and Acceptance Tolerances
for Fabric-Measuring Devices

Indication of device (yards)	Maintenance Tolerance		Acceptance Tolerance	
	On underregistration (inches)	On overregistration (inches)	On underregistration (inches)	On overregistration (inches)
2 or less	3/8	1/4	1/4	1/8
3	3/8	5/16	1/4	5/32
4	1/2	5/16	1/4	5/32
5	5/8	3/8	5/16	3/16
6	3/4	3/8	3/8	3/16
7 and 8	1	1/2	1/2	1/4
9	1-1/4	5/8	5/8	5/16
10 and 11	1-1/2	3/4	3/4	3/8
12 and 13	1-3/4	7/8	7/8	7/16
14 and 15	2	1	1	1/2
Over 15	Add 1/8 inch per indicated yard	Add 1/16 inch per indicated yard	Add 1/16 inch per indicated yard	Add 1/32 inch per indicated yard

[THIS PAGE LEFT INTENTIONALLY BLANK]

Sec. 5.51. Wire- and Cordage-Measuring Devices

A. Application

A.1. - This code applies to mechanisms and machines designed to indicate automatically the length of cordage, rope, wire, cable, or similar flexible material passed through the measuring elements.

A.2. - See also Sec. 1.10; General Code requirements.

S. Specifications

S.1. Units. - A wire- or cordage-measuring device shall indicate lengths in terms of feet, yards, or meters, or combinations of units of the same measurement system, and shall have minimum increments with values that do not exceed the equivalent of 0.1 meter or 0.1 yard.
(Amended 1989)

S.2. Design of Indicating Elements.

S.2.1. Graduations.

S.2.1.1. Length. - Graduations shall be so varied in length that they may be conveniently read.

S.2.1.2. Width. - In any series of graduations, the width of a graduation shall in no case be greater than the width of the minimum clear interval between graduations, and the width of main graduations shall be not more than 50 percent greater than the width of subordinate graduations. Graduations shall in no case be less than 0.2 mm (0.008 in), nor more than 1.0 mm (0.04 in), in width.

S.2.1.3. Clear Interval Between Graduations. - The clear interval between graduations shall be at least as wide as the widest graduation, and in no case less than 0.8 mm (0.03 in).

S.2.2. Indicator.

S.2.2.1. Symmetry. - The index of an indicator shall be symmetrical with respect to the graduations, at least throughout that portion of its length associated with the graduations.

S.2.2.2. Length. - The index of an indicator shall reach to the finest graduations with which it is used, unless the indicator and the graduations are in the same plane, in which case the distance between the end of the indicator and the ends of the graduations, measured along the line of the graduations, shall be not more than 1.0 mm (0.04 in).

S.2.2.3. Width. - The index of an indicator shall not be wider than the narrowest graduations with which it is used, and shall in no case exceed 0.4 mm (0.015 in).

S.2.2.4. Clearance. - The clearance between the index of an indicator and the graduations shall in no case be more than 1.5 mm (0.06 in).

S.2.2.5. Parallax. - Parallax effects shall be reduced to the practicable minimum.

S.2.3. Zero Indication. - Primary indicating elements shall be readily returnable to a definite zero indication.

S.3. Design of Measuring Elements.

S.3.1. Sensitiveness. - If the most sensitive element of the indicating system utilizes an indicator and graduations, the relative movement of these parts corresponding to a measurement of 30 cm (1 ft) shall be not less than 6 mm (1/4 in).

S.3.2. Slippage. - The measuring elements of a wire- or cordage-measuring device shall be so designed and constructed as to reduce to the practicable minimum any slippage of material being measured and any lost motion in the measuring mechanism.

S.3.3. Accessibility. - A wire- or cordage-measuring device shall be so constructed that the measuring elements are readily visible and accessible, without disassembly of any supporting frame or section of the main body, for purposes of cleaning or removing any foreign matter carried into the mechanism by the material being measured.

S.4. Marking Requirements.

S.4.1. Limitation of Use. - If a device will measure accurately only certain configurations, diameters, types, or varieties of materials, or with certain accessory equipment, all limitations shall be clearly and permanently stated on the device.

S.4.2. Operating Instructions. - Any necessary operating instructions shall be clearly stated on the device.

S.4.3. Indications. - Indicating elements shall be identified by suitable words or legends so that the values of the indications will be unmistakable.

S.5. Design Accuracy. - Indications of length shall be accurate whether the values of the indications are being increased or decreased.

N. Notes

N.1. Testing Medium. - Wherever feasible, a wire- or cordage-measuring device shall be tested with a steel tape not less than 10 mm (3/8 in) in width and at least 15 m (50 ft) in length. When a device cannot be tested in this manner because of the design of the device, it shall be tested with a dimensionally stable material appropriately marked and compared at frequent periodic intervals with a steel tape in order to assure that any marked interval is not in error by more than 1/3 of the tolerance of the device at that particular interval. (Amended 1981)

N.2. Minimum Test. - Tests shall be conducted at a minimum initial increment of 5 m (20 ft) and appropriate increments up to at least 15 m (50 ft).

T. Tolerances

T.1. Tolerance Values. - Maintenance and acceptance tolerances shall be as shown in Table 1.

UR. User Requirements

UR.1. Installation Requirements.

UR.1.1. Installation. - A wire- or cordage-measuring device shall be securely supported and firmly fixed in position.

UR.2. Use Requirements.

UR.2.1. Limitation of Use. - A wire- or cordage-measuring device shall be used to measure only those materials that it was designed to measure, and in no case shall it be used to measure a material that a marking on the device indicates should not be measured.

UR.2.2. Return to Zero. - The primary indicating elements of a wire- or cordage-measuring device shall be returned to zero before each measurement.

UR.2.3. Operation of Device. - A wire- or cordage-measuring device shall not be operated in such a manner as to cause slippage or inaccurate measurement.

UR.2.4. Cleanliness. - The measuring elements of a wire- or cordage-measuring device shall be kept clean to prevent buildup of dirt and foreign material that would adversely affect the measuring capability of the device.

Table 1.
Maintenance and Acceptance Tolerances for
Wire- and Cordage-Measuring Devices

Indication of device (feet)	Acceptance and Maintenance Tolerances	
	On underregistration (inches)	On overregistration
20	6	3
Over 20 to 30	8	4
Over 30 to 40	10	5
Over 40 to 50	12	6
Over 50	Add 2 inches per indicated 10 feet	Add 1 inch per indicated 10 feet

Sec. 5.52. Linear Measures

A. Application

A.1. - This code applies to any linear measure or measure of length, whether flexible or inflexible, permanently installed or portable.

A.2. - See also Sec. 1.10; General Code requirements.

S. Specifications

S.1.M. Units. - A linear measure may be in total length, and the total length may be subdivided in any or all of the following:

(a) centimeters and tenths of the centimeter;

(b) meters; and

(c) multiples of meters.

A 1-m measure may be graduated, in addition, to show 0.1-m and multiples of 0.1-m subdivisions.

S.1. Units. - A linear measure may be in total length, and the total length may be subdivided in any or all of the following:

(a) inches and binary submultiples of the inch;

(b) feet;

(c) yards and multiples of yards.

A 1-yd measure may be graduated, in addition, to show 1/3-yd and 2/3-yd subdivisions. A flexible tape may be graduated in tenths or hundredths of a foot, or both tenths and hundredths of a foot. (Any other subdivisions are allowable only on measures of special purposes and when required for such purposes.)

S.2. Material.

S.2.1. Flexible Tape. - A flexible tape shall be made of metal.

S.2.2. End Measure. - If an end measure is made of material softer than brass, the ends of the measure shall be protected by brass (or other metal at least equally hard) securely attached.

S.3. Finish. - Measures shall be smoothly finished.

S.4. Design.

S.4.1. Rigid Measure. - A rigid measure shall be straight.

S.4.2. Folding Measure. - A folding measure shall open to a definite stop, and when so opened shall be straight.

S.5. Graduations.

S.5.1. General. - Graduations shall be perpendicular to the edge of the measure.

S.5.2. Width. - The width of the graduations on any measure shall not exceed one-half the width of the smallest graduated interval on the measure, and in no case shall be wider than 0.75 mm (0.03 in).
(Amended 1982)

T. Tolerances

T.1. For Measures Except Metal Tapes. - Maintenance tolerances in excess and in deficiency for measures except metal tapes shall be as shown in Table 1. Acceptance tolerances shall be one-half the maintenance tolerances.

Table 1.
Maintenance Tolerances, in Excess and in Deficiency, for Linear Measures Except Metal Tapes

Nominal interval from zero	Tolerance
feet	inch
1/2 or less	1/64
1	1/32
2	1/16
3	3/32
4	1/8
5	5/32
6	3/16

T.2. For Metal Tapes. - Maintenance and acceptance tolerances in excess and in deficiency for metal tapes shall be as shown in Table 2. Tapes of 10 m (25 ft) or over shall be tested at a tension resulting from a load of 5 kg (10 lb). Tapes less than 10 m (25 ft) shall be tested at a tension resulting from a load of 2.5 kg (5 lb). However, flexible metal tapes of 10 m (25 ft) or less that are not normally used under tension shall be tested with no tension applied. All tapes shall be supported throughout on a horizontal flat surface whenever tested.
(Amended 1972)

Table 2.
Maintenance and Acceptance Tolerances,
in Excess and in Deficiency, for Metal Tapes

Nominal interval from zero	Tolerance
feet	inch
6 or less	1/32
7 to 30, inclusive	1/16
31 to 55, inclusive	1/8
56 to 80, inclusive	3/16
81 to 100, inclusive	1/4

Sec. 5.53. Odometers

A. Application

A.1. - This code applies to odometers that are used or are to be used to determine the charges for rent or hire of passenger vehicles and trucks and buses. (When official examinations are undertaken on odometers that form the basis for the payment of fees or taxes to, or the preparation of reports for, governmental agencies, and in similar cases, the requirements of this code shall be applied insofar as they are applicable and appropriate to the conditions of such special uses.)
(Amended 1977)

A.2. - This code does not apply to taximeters (for which see Sec. 5.54; Code for Taximeters).
(Amended 1977)

A.3. See also Sec. 1.10; General Code requirements.

S. Specifications

S.1. Design of Indicating Elements.

S.1.1. General. - The primary indicating element of an odometer may be:

(a) the distance-traveled portion of the "speedometer" assembly of a motor vehicle;

(b) a special cable-driven distance-indicating device; or

(c) a hub odometer attached to the hub of a wheel on a motor vehicle.
(Amended 1977)

S.1.2. Units. - An odometer shall indicate in terms of miles or kilometers.
(Amended 1977)

S.1.3. Minimum Indicated Value. - The value of the interval of indicated distance shall be:

(a) for odometers indicating in kilometers, 0.1 kilometer; or

(b) for odometers indicating in miles, 0.1 mile.
(Amended 1977)

S.1.4. Advancement of Indicating Elements. – The most sensitive indicating elements of an odometer may advance continuously or intermittently; all other elements shall advance intermittently. Except when the indications are being returned to zero, the indications of an installed odometer shall be susceptible to advancement only by the rotation of the vehicle wheel or wheels.
(Amended 1977)

S.1.5. Readability. - Distance figures and their background shall be of sharply contrasting colors. Figures indicating tenth units shall be differentiated from other figures with different colors, or with a decimal point, or by other equally effective means. Except during the period of advance of any decade to the next higher indication, only one figure in each decade shall be exposed to view. Any protective covering intended to be transparent shall be in such condition that it can be made transparent by ordinary cleaning of its exposed surface.
(Amended 1977)

S.1.6. Digital Indications and Representation. - Digital indicating odometers (discontinuous registration) shall "round off" indications to the nearest minimum division or truncate indications to the lower minimum division.
(Added 1990)

N. Notes

N.1. Testing Procedures.

N.1.1. Test Methods. - To determine compliance with distance tolerances, a distance test of an odometer shall be conducted utilizing one or more of the following test methods:

(a) Road Test. - A road test consists of driving the vehicle over a precisely measured road course.

(b) Fifth-Wheel Test. - A fifth-wheel test consists of driving the vehicle over any reasonable road course and determining the distance actually traveled through the use of a mechanism known as a "fifth wheel" that is attached to the vehicle and that independently measures and indicates the distance.

(c) Simulated-Road Test. - A simulated-road test consists of determining the distance traveled by use of a roller device, or by computation from rolling circumference and wheel-turn data.
(Amended 1977)

N.1.2. Test Runs. - Not less than two test runs shall be conducted. Acceleration and deceleration shall be carefully controlled to avoid spinning or skidding the wheels.
(Amended 1977)

N.1.2.1. For Devices Indicating in Miles. - The test runs shall be two miles in length, shall start from, and finish at, a dead stop with a minimum of 80 percent of the run between 30 miles per hour and 45 miles per hour.
(Added 1977)

N.1.2.2. For Devices Indicating in Kilometers. - The test runs shall be 3 kilometers in length, shall start from, and finish at, a dead stop with a minimum of 80 percent of the run between 50 kilometers per hour and 75 kilometers per hour.
(Added 1977)

N.1.3. Test Conditions.

N.1.3.1. Tire Stabilization. - Road tests or fifth-wheel tests shall be preceded by a run of at least 8 kilometers or 5 miles, for the purpose of stabilizing tire pressures. Simulated road tests on a roller device shall be made at stable tire pressures.
(Amended 1977)

N.1.3.2. Tire Pressure. - At the completion of the test run or runs, the tires of the vehicle under test shall be checked to determine that the tire pressure is that operating tire pressure posted in the vehicle. If not, the tire pressure should be adjusted to the posted tire pressure and further tests may be conducted to determine the operating characteristics of the odometer.
(Amended 1977)

N.1.3.3. Vehicle Loading.

(a) **Passenger Load.** - During the distance test of an odometer, the vehicle may carry two persons.

(b) **Truck Cargo Load.** - Truck odometers shall be tested by one of the following methods:

1. the truck is loaded with one-half of the maximum cargo load; or

2. unloaded if unloaded test tolerances are applied.

(Amended 1977, 1987)

T. Tolerances

T.1. To Underregistration and to Overregistration. - The tolerances hereinafter prescribed shall be applied to errors of underregistration and errors of overregistration.

T.2. Tolerance Values. - Except for unloaded trucks, maintenance and acceptance tolerances on odometers shall be 4 percent of the interval under test.
(Amended 1977, 1987)

T.2.1. Tolerances for Unloaded Trucks. - Maintenance and acceptance tolerances on truck odometers shall be 5 percent for underregistration and 3 percent for overregistration of the interval under test.
(Added 1987)

UR. User Requirements

UR.1. Inflation of Vehicle Tires. - The operational tire pressure of passenger vehicle and truck tires shall be posted in the vehicle and tires shall be maintained at the posted pressure.
(Amended 1977)

Sec. 5.54. Taximeters

A. Application

A.1. This code applies to taximeters; that is, to devices that automatically calculate at a predetermined rate or rates and indicate the charge for hire of a vehicle.

A.2. This code does not apply to odometers on vehicles that are rented on a distance basis (for which see Sec. 5.53 Code for Odometers).
(Amended 1977)

A.3. See also Sec. 1.10; General Code requirements.

S. Specifications

S.1. Design of Indicating and Recording Elements.

S.1.1. General. - A taximeter shall be equipped with a primary indicating element and may be equipped with a recording element.
(Amended 1988)

S.1.2. Advancement of Indicating Elements. - Except when a taximeter is being cleared, the primary indicating and recording elements shall be susceptible of advancement only by the movement of the vehicle or by the time mechanism.
(Amended 1988)

S.1.3. Visibility of Indications. - The indications of fare, including extras, and the mode of operation, such as "time" or "hired," shall be constantly displayed whenever the meter is in operation. All indications of passenger interest shall be easily read from a distance of 1.2 m (4 ft) under any condition of normal operation.
(Amended 1986, 1977, and 1988)

S.1.3.1. Minimum Height of Figures, Words, and Symbols. - The minimum height of the figures used to indicate the fare shall be 10 mm and for extras, 8 mm. The minimum height of the figures, words, or symbols used for other indications, including those used to identify or define, shall be 3.5 mm.
(Added 1986)

S.1.3.2. Lighting of Indications. - *Integral lighting shall be provided to illuminate the fare, extras, the rate or rate code, and the taximeter status (i.e., vacant, hired, and time off).*
[Nonretroactive as of January 1, 1989.]
(Added 1988) (Amended 1990)

S.1.4. Actuation of Fare-Indicating Mechanism. - When a taximeter designed to calculate fares upon the basis of a combination of distance traveled and time elapsed is operative with respect to fare indication, the fare-indicating mechanism shall be actuated by the distance mechanism whenever the vehicle is in motion at such a speed that the rate of distance revenue equals or exceeds the time rate, and may be actuated by the time mechanism whenever the vehicle speed is less than this and when the vehicle is not in motion. Means shall be provided for the vehicle operator to render the time mechanism either operative or inoperative with respect to the fare-indicating mechanism.
(Amended 1977)

S.1.5. Operating Condition.

S.1.5.1. General. - When a taximeter is cleared, the indication "Not Registering," "Vacant," or an equivalent expression shall be shown. Whenever a taximeter is set to register charges, it shall indicate "Registering," "Hired," or an equivalent expression and the rate at which it is set shall be automatically indicated (Rate 1 or Rate A, for example).
(Amended 1988)

S.1.5.2. Time not Recording. - When a taximeter is set for fare registration with the time mechanism inoperative, it shall indicate "Time Not Recording" or an equivalent expression.
(Amended 1988)

S.1.6. Fare Identification. - Fare indications shall be identified by the word "Fare" or by an equivalent expression. Values shall be defined by suitable words or monetary signs.

S.1.7. Extras. - Extras shall be indicated as a separate item and shall not be included in the fare indication. They shall be identified by the word "Extras" or by an equivalent expression. Values shall be defined by suitable words or monetary signs. Means may be provided to totalize the fare and extras if the totalized amount returns to separate indications of fare and extras within five seconds or less.
(Amended 1988)

S.1.7.1. Nonuse of Extras. - If and when taximeter extras are prohibited by legal authority or are discontinued by a vehicle operator, the extras mechanisms shall be rendered inoperable or the extras indications shall be effectively obscured by permanent means.

S.1.8. Protection of Indications. - Indications of fare and extras shall be displayed through and entirely protected by glass or other suitable transparent material securely attached to the housing of the taximeter.

S.1.9. Recorded Representation. *– A printed receipt issued from a taximeter, whether through an integral or separate recording element, shall include the following:*

(a) date

*(b) unique vehicle identification number, such as the medallion number, taxi number, vehicle identification number (VIN) or permit number**

*(c) start and end time of trip**

*(d) distance traveled, maximum increment of 0.1 kilometer (0.1 mile)**

(e) fare in $

*(f) for multi-rate taximeters, each rate at which fare was computed and the associated fare at that rate**

*(g) additional charges where permitted such as extras, surcharge, telephone use, tip and tax shall be identified and itemized**

*(h) total fare in $ (total charge)**

[Nonretroactive as of January 1, 1989]
** [Nonretroactive as of January 1, 2000]*
(Added 1988) (Amended 1999)

S.1.9.1. Multiple Recorded Representation.

S.1.9.1.1. Duplicate Receipts. *– A recording element may produce a duplicate receipt for the previous transaction provided the information printed is identical to the original with the exception of time issued. The duplicate receipt shall include the words "duplicate" or "copy." The feature to print a duplicate receipt shall be deactivated at the time the meter is hired for the next fare.*
[Nonretroactive as of January 1, 2000]
(Added 1999)

S.1.10. Non-fare Information. *– The fare and extras displays may be used to display auxiliary information provided the meter is in the vacant condition and such information is only displayed for ten seconds, or less. If the information consists of a list of information, the list may be displayed one item after another, provided that each item is displayed for ten seconds, or less.*
[Nonretroactive as of January 1, 2002]
(Added 2000)

S.2. Basis of Fare Calculations. - A taximeter shall calculate fares only upon the basis of:

(a) distance traveled,

(b) time elapsed, or

(c) a combination of distance traveled and time elapsed.
(Amended 1977)

S.2.1. Initial Time and Distance Intervals. - The time and distance intervals of a taximeter shall be directly proportional as expressed in the following formula:

$$\frac{\text{Seconds of Initial Time Interval}}{\text{Seconds Per Non - Initial Time Interval}} = \frac{\text{Distance of Initial Mileage Interval}}{\text{Distance Per Non - Initial Mileage Interval}}$$

(Added 1990)

S.3. Design of Operating Control.

S.3.1. Positions of Control. - The several positions of the operating controls shall be clearly defined and shall be so constructed that accidental or inadvertent changing of the operating condition of the taximeter is improbable. Movement of the operating controls to an operating position immediately following movement to the cleared position shall be delayed enough to permit the taximeter to come to a complete rest in the cleared position.
(Amended 1988)

S.3.2. Flag. - If the control for the operating condition is a lever-arm and flag, the flag shall be at its highest position when the taximeter is cleared, and in this position the whole of the flag shall be above the level of the taximeter housing.

S.3.3. Control for Extras Mechanism. - The knob, handle, or other means provided to actuate the extras mechanism shall be inoperable whenever the taximeter is cleared.

S.4. Interference. - The design of a taximeter shall be such that there will be no interference between the time and the distance portions of the mechanism device at any speed of operation.
(Amended 1977 and 1988)

S.5. Provision for Security Seals. - Adequate provision shall be made to provide security for a taximeter. Security may be provided either by:

(a) Affixing security seals to the taximeter and to all other components required for service operation of a complete installation on a vehicle, so that no adjustments, alterations, or replacements affecting accuracy or indications of the device or the assembly can be made without mutilating the seal or seals; or

(b) Using a combination of security seals described in paragraph (a) and, in the case of a component that may be removed from a vehicle (e.g., slide mounting the taximeter), providing a physical or electronic link between components affecting accuracy or indications of the device to ensure that its performance is not affected and operations is permitted only with those components having the same unique properties.

The sealing means shall be such that it is not necessary to disassemble or remove any part of the device or of the vehicle to apply or inspect the seals.
(Amended 1988 and 2000)

S.6. Power Interruption, Electronic Taximeters.

(a) After a power interruption of 3 seconds or less, the fare and extras indications shall return to the previously displayed indications and may be susceptible to advancement without the taximeter being cleared.

(b) After a power interruption exceeding 3 seconds, the fare and extras indications shall return to the previously displayed indications and shall not be susceptible to advancement until the taximeter is cleared.

*After restoration of power following an interruption exceeding 3 seconds, the previously displayed fare shall be displayed for a maximum of 1 minute at which time the fare shall automatically clear and the taximeter shall return to the vacant condition.**
**[Nonretroactive as of January 1, 2002]*
(Added 1988) (Amended 1989, 1990 and 2000)

S.7. Anti-fraud Provisions, Electronic Taximeters. - An electronic taximeter may have provisions to detect and eliminate distance input that is inconsistent with output of the vehicle's distance sensor. When a taximeter equipped with this feature detects input inconsistent with the distance sensor:

(a) The meter shall either filter out the inconsistent distance input signals or cease to increment fare based on distance until the distance input signal returns to normal. If the meter ceases to increment fare based on distance, the taximeter may continue to increment fare based on elapsed time;

(b) The taximeter shall provide a visible or audible signal that inconsistent input signals are being detected; and

(c) The taximeter shall record the occurrence in an event logger. The event logger shall include an event counter (000 to 999), the date, and the time of at least the last 1000 occurrences.
(Added 2001)

N. Notes

N.1. Distance Tests.

N.1.1. Test Methods. - To determine compliance with distance tolerances, a distance test of a taximeter shall be conducted utilizing one or more of the following test methods:

(a) **Road Test. -** A road test consists of driving the vehicle over a precisely measured road course.

(b) **Fifth-Wheel Test. -** A fifth-wheel test consists of driving the vehicle over any reasonable road course and determining the distance actually traveled through the use of a mechanism known as a "fifth wheel" that is attached to the vehicle and that independently measures and indicates the distance.

(c) **Simulated-Road Test. -** A simulated-road test consists of determining the distance traveled by use of a roller device, or by computation from rolling circumference and wheel-turn data.
(Amended 1977)

N.1.2. Test Procedures. - The distance test of a taximeter, whether a road test, a simulated-road test, or a fifth-wheel test, shall include at least duplicate runs of sufficient length to cover at least the third money drop or one mile, whichever is greater, and shall be at a speed approximating the average speed traveled by the vehicle in normal service. In the case of metric-calibrated taximeters, the test should cover at least the third money drop or 2 km, whichever is greater.
(Amended 1977)

N.1.3. Test Conditions.

N.1.3.1. Vehicle Lading. - During the distance test of a taximeter, the vehicle shall carry two persons, or in the case of a simulated-road test, 70 kg or 150 lb of test weights may be substituted in lieu of the second person.

N.1.3.2. Tire Pressure. - At the completion of test run or runs, the tires of the vehicle under test shall be checked to determine that the tire pressure is that operating tire pressure posted in the vehicle. If not, the tire pressure should be adjusted to the posted tire pressure and further tests may be conducted to determine the operating characteristics of the odometer.
(Amended 1977)

N.2. Time Test. - If a taximeter is equipped with a timing device through which charges are made for time intervals, the timer shall be tested at the initial interval, four separate subsequent intervals, and an average time test of at least four consecutive subsequent time intervals.
(Amended 1988)

N.3. Interference Test. - If a taximeter is equipped with a timing device through which charges are made for time intervals, a test shall be conducted to determine whether there is interference between the time and distance elements. During the interference test, the vehicle's operating speed shall be 3 or 4 km/h, or 2 or 3 mi/h faster than the speed at which the basic distance rate equals the basic time rate. The basic rate per hour divided by the basic rate per mile is the speed (km/h or mi/h) at which the basic time rate and basic distance rate are equal.
(Amended 1988)

T. Tolerances

T.1. Tolerance Values.

T.1.1. On Distance Tests. - Maintenance and acceptance tolerances for taximeters shall be as follows:

(a) On Overregistration: 1 percent of the interval under test.

(b) On Underregistration: 4 percent of the interval under test, with an added tolerance of 30 m or 100 ft whenever the initial interval is included in the interval under test.

T.1.2. On Time Tests.

T.1.2.1. On Individual Time Intervals. Maintenance and acceptance tolerances on individual time intervals shall be as follows:

(a) On Overregistration: 3 seconds per minute (5 percent).

(b) On Underregistration: 9 seconds per minute (15 percent) on the initial interval, and 6 seconds per minute (10 percent) on subsequent intervals.

T.1.2.2. On Average Time Interval Computed After the Initial Interval. - Except for the initial interval, maintenance and acceptance tolerances on the average time interval shall be as follows:

(a) On Overregistration: 0.2 second per minute (0.33 percent).

(b) On Underregistration: 3 seconds per minute (5 percent).
(Amended 1991)

T.1.3. On Interference Tests.

T.1.3.1. The registration of a taximeter in the "time on" position shall agree within one percent of its performance in the "time off" position.
(Added 1988)

UR. User Requirements

UR.1. Inflation of Vehicle Tires. - The operational tire pressure of passenger vehicles and truck tires shall be posted in the vehicle and shall be maintained at the posted pressure.
(Amended 1977)

UR.2. Position and Illumination of Taximeter. - A taximeter shall be so positioned and illuminated that its indications, operational markings, and controls of passenger interest can be conveniently read by a passenger seated in the back seat of the vehicle.
(Amended 1985 and 1986)

UR.3. Statement of Rates. - The distance and time rates for which a taximeter is set, including the initial distance interval and the initial time interval, the local tax rate, and the schedule of extras when an extras indication is provided, shall be conspicuously displayed inside the front and rear passenger compartments. The words "Rate," "Rates, "or "Rates of Fare" shall precede the rate statement. The rate statement shall be fully informative, self-explanatory, and readily understandable by the ordinary passenger, and shall either be of a permanent character or be protected by glass or other suitable transparent material.
(Amended 1977, 1988, 1990, and 1999)

Sec. 5.55. Timing Devices

A. Application

A.1. - This code applies to devices used to measure time during which services are being dispensed (such as vehicle parking, laundry drying, and car washing).

A.2. - See also Sec. 1.10.; General Code requirements.

S. Specifications

S.1. Design of Indicating and Recording Elements and of Recorded Representations.

S.1.1. Primary Elements.

S.1.1.1. General. - A timing device shall be equipped with a primary indicating element, and may also be equipped with a primary recording element. A readily observable in-service light or other equally effective means that automatically indicates when laundry driers, vacuum cleaners, and car washes are in operation shall be deemed an appropriate primary indicating element.
(Amended 1979)

S.1.1.2. Units. - A timing device shall indicate and record, if the device is equipped to record, the time in terms of minutes for time intervals of 60 minutes or less and in hours and minutes for time intervals greater than 60 minutes.

S.1.1.3. Value of Smallest Unit. - The value of the smallest unit of indicated time and recorded time, if the device is equipped to record, shall not exceed the equivalent of:

(a) one-half hour on parking meters indicating time in excess of 2 hours;

(b) six minutes on parking meters indicating time in excess of 1 but not greater than 2 hours; or

(c) five minutes on all other devices, except those equipped with an in-service light.

(Amended 1975)

S.1.1.4. Advancement of Indicating and Recording Elements. - Primary indicating and recording elements shall be susceptible to advancement only during the mechanical operation of the device, except that clocks may be equipped to manually reset the time.

S.1.1.5. Operation of In-Service Indicator Light. The in-service light indicator shall be operative only during the time the device is in operation.

S.1.1.6. Discontinuous Indicating Parking Meters. - An indication of the time purchased shall be provided at the time the meter is activated in units of no more than 1 minute for times less than 1 hour and not more than 2 minutes for times of 1 hour or more. Convenient means shall be provided to indicate to the purchaser the unexpired time.
(Added 1975 and amended 1976)

S.1.2. Graduations.

S.1.2.1. Length. - Graduations shall be so varied in length that they may be conveniently read.

S.1.2.2. Width. - In any series of graduations, the width of a graduation shall in no case be greater than the width of the minimum clear interval between graduations and the width of main graduations shall be not more than 50 percent greater than the width of subordinate graduations. Graduations shall in no case be less than 0.2 mm (0.008 in) in width.

S.1.2.3. Clear Interval Between Graduations. - The clear interval shall be not less than 0.75 mm (0.03 in). If the graduations are not parallel, the measurement shall be made:

(a) along the line of relative movement between the graduations at the end of the indicator, or

(b) if the indicator is continuous, at the point of widest separation of the graduations.

S.1.3. Indicators.

S.1.3.1. Symmetry. - The index of an indicator shall be symmetrical with respect to the graduations, at least throughout that portion of its length associated with the graduations.

S.1.3.2. Length. - The index of an indicator shall reach to the finest graduations with which it is used, unless the indicator and the graduations are in the same plane, in which case the distance between the end of the indicator and the ends of the graduations,

measured along the line of the graduations, shall be not more than 1.0 mm (0.04 in).

S.1.3.3. Width. - The width of the index of an indicator in relation to the series of graduations with which it is used shall be not greater than:

(a) the width of the widest graduation, and

(b) the width of the minimum clear interval between the graduations.

S.1.3.4. Parallax. - Parallax effect shall be reduced to a practicable minimum.

S.1.4. Printed Tickets. - A printed ticket issued or stamped by a timing device shall have printed clearly thereon:

(a) the time and day when the service ends and the time and day when the service begins, except that a self-service money-operated device that clearly displays the time of day need not record the time and day when the service begins; or

(b) the time interval purchased, and the time and day that the service either begins or ends.

(Amended 1983)

S.2. Marking Requirements, Operating Instructions. - Operating instructions shall be clearly stated on the device.

N. Notes

N.1. Test Method. - A timing device shall be tested with a timepiece with an error of not greater than plus or minus 15 seconds per 24-hour period. In the test of timing devices with a nominal capacity of 1 hour or less, stopwatches with a minimum division of not greater than one-fifth second shall be used. In the test of timing devices with a nominal capacity of more than 1 hour, the value of the minimum division on the timepiece shall be not greater than 1 second. Time pieces and stopwatches shall be calibrated with standard time signals as described in National Institute of Standards and Technology Special Publication 432, NIST Time and Frequency Dissemination Services, or any superseding publication.
(Amended 1978)

N.2. Broadcast Times and Frequencies. - Time and frequency standards are broadcast by the stations listed in Table N.2.

T. Tolerances

T.1. Tolerance Values. - Maintenance and acceptance tolerances for timing devices shall be as follows:

T.1.1. For Timing Devices Other Than Those Specified in T.1.2. and T.1.3. - The maintenance and acceptance tolerances shall be:

(a) On Overregistration: 5 seconds for any time interval of 1 minute or more; and

Table N.2.* Broadcast Times and Frequencies

Station	Location, Latitude, Longitude	Frequency (MHz)	Times of Transmission (UTC)
WWV	Fort Collins, Colorado 40°41' N 105°02' W	2.5 5.0 10.0 15.0	Continuous
WWVH	Kauai, Hawaii 21°59' N 159°46' W	2.5 5.0 15.0	Continuous
CHU	Ottawa, Canada 45°18'N 75°45'W	3.330 7.335 14.670	Continuous

*From NIST Special Publication 559, “Time and Frequency Users’ Manual,” 1979.
(Added 1988)

(b) On Underregistration: 6 seconds per indicated minute.
(Amended 1975 and 1986)

T.1.2. For Time Clocks and Time Recorders. - The maintenance and acceptance tolerances on over-registration and underregistration shall be 3 seconds per hour, but not to exceed 1 minute per day.
(Amended 1975)

T.1.3. On Parking Meters. - The maintenance and acceptance tolerances are shown in Table T.1.3.

T.2. Tests Involving Digital Indications or Representations. To the tolerances that would otherwise be applied, there shall be added an amount equal to one-half the minimum value that can be indicated or recorded.

UR. User Requirements

UR.1. Statement of Rates. - The price in terms of money per unit or units of time for the service dispensed and the number of coins the device will accept and be activated by at one time, shall be clearly, prominently, and conspicuously displayed.
(Amended 1976)

UR.2. Time Representations. - Any time representation shall be within plus or minus 2 minutes of the correct time in effect in the area, except on an individual clock used only for "time out"; in addition, the time indication of the "time-out" clock shall be the same as or less than that of the "time-in" clock.
(Amended 1975)

Table T.1.3.
Maintenance and Acceptance Tolerance
for Parking Meters

Maintenance and Acceptance Tolerance		
Nominal Time Capacity	On Overregistration	On Underregistration
30 minutes or less	No tolerance	10 seconds per minute, but not less than two minutes
Over 30 minutes to and including 1 hour	No tolerance	5 minutes plus 4 seconds per minute over 30 minutes
Over 1 hour	No tolerance	7 minutes plus 2 minutes per hour over 1 hour

[THIS PAGE LEFT INTENTIONALLY BLANK]

Sec. 5.56.(a) Grain Moisture Meters

Section 5.56. has been reorganized into two sections. This Section, 5.56.(a), is applicable to all NTEP grain moisture meters. It is also applicable to any grain moisture meter manufactured or placed into service after January 1, 1998. (Code reorganized and renumbered 1996.)

A. Application

A.1. This code applies to grain moisture meters; that is, devices used to indicate directly the moisture content of cereal grain and oil seeds. The code consists of general requirements applicable to all moisture meters and specific requirements applicable only to certain types of moisture meters. Requirements cited for "test weight per bushel" indications or recorded representations are applicable only to devices incorporating an automatic test weight per bushel measuring feature.
(Amended 2003)

A.2. This code does not apply to devices used for in-motion measurement of grain moisture content or seed moisture content.

A.3. Type Evaluation - The National Type Evaluation Program will accept for type evaluation only those devices that comply with this code. State enforcement will be based upon the effective dates identified with each requirement when specific dates are shown.
(Added 1993)

A.4. See also Sec. 1.10; General Code requirements.

S. Specifications

S.1. Design of Indicating, Recording, and Measuring Elements.

S.1.1. Digital Indications and Recording Elements.

(a) Meters shall be equipped with a digital indicating element.

(b) The minimum height for the digits used to display moisture content shall be 10 mm.

(c) Meters shall be equipped with a communication interface that permits interfacing with a recording element and transmitting the date, grain type, grain moisture results, test weight per volume results, and calibration version identification.

(d) A digital indicating element shall not display, and a recording element shall not record, any moisture content values or test weight per volume values before the end of the measurement cycle.

(e) Moisture content results shall be displayed and recorded as percent moisture content, wet basis. Test weight per bushel results shall be displayed and recorded as pounds per bushel. Subdivisions of these units shall be in terms of decimal subdivisions (not fractions).

(f) A meter shall not display or record any moisture content or test weight per volume values when the moisture content of the grain sample is beyond the operating range of the device, unless the moisture and test weight representations include a clear error indication (and recorded error message with the recorded representation).

(g) On multi-constituent meters (e.g., meters which also measure grain protein), provision shall be made for displaying and recording the constituent label (such as moisture, protein, etc.) to make it clear which constituent is associated with each of the displayed and recorded values.
(Added 1995)

(Added 1993) (Amended 1994, 1995 and 2003)

S.1.2. Grain or Seed Kind and Class Selection and Recording. - Provision shall be made for selecting and recording the kind and class (as appropriate) of grain or seed to be measured. The means to select the kind and class of grain or seed shall be readily visible and the kind and class of grain or seed selected shall be clearly and definitely identified. Abbreviations for grain types indicated on the meter must meet the minimum acceptable abbreviations listed in Table S.1.2. Meters shall have the capability (i.e., display capacity) of indicating the grain type using a minimum of four characters in order to accommodate the four-character abbreviations listed in Table S.1.2.
(Amended 1993, 1995, and 1997)

S.1.3. Operating Range. - A meter shall automatically and clearly indicate when the operating range of the meter has been exceeded. The operating range shall specify the following:

(a) Temperature Range of the Meter

The temperature range over which the meter may be used and still comply with the applicable requirements shall be specified. The minimum temperature range shall be 10 °C to 30 °C. No moisture value may be displayed when the temperature range is exceeded. An appropriate message shall be displayed when the temperature of the meter is outside its specified operating range.

(b) Temperature Range of Each Grain or Seed

The temperature range for each grain or seed for which the meter is to be used shall be specified. The minimum temperature range for each grain shall be 0 °C to 40 °C. No moisture value may be displayed when the temperature range is exceeded. An appropriate error message shall be displayed when the temperature of the grain sample exceeds the specified temperature range for the grain.

(c) Moisture Range of the Grain or Seed

The moisture range for each grain or seed for which the meter is to be used shall be specified. Moisture and test weight per bushel values may be displayed when the moisture range is exceeded if accompanied by a clear indication that the moisture range has been exceeded.
(Amended 2003)

(d) Maximum Allowable Meter/Grain Temperature Difference

The maximum allowable difference in temperature between the meter and the sample for which an accurate moisture determination can be made shall be specified. The minimum temperature difference shall be 10 °C. No moisture value may be displayed when the maximum allowable temperature difference is exceeded. An appropriate error message shall be displayed when the difference in temperature between the meter and the sample exceeds the specified difference.
(Added 1993) (Amended 1995)

S.1.4. Value of Smallest Unit. - The display shall permit moisture value determination to both 0.01% and 0.1% resolution. The 0.1% resolution is for commercial transactions; the 0.01% resolution is for type evaluation and calibration purposes only, not for commercial purposes. Test weight per bushel values shall be determined to the nearest 0.1 pound per bushel.
(Amended 2003)

S.1.5. Operating Temperature.

(a) Warm up period: When a meter is turned on it shall not display or record any usable values until the operating temperature necessary for accurate determination has been attained, or the meter shall bear a conspicuous statement adjacent to the indication stating that the meter shall be turned on for a time period specified by the manufacturer prior to use.

(b) A meter shall meet the requirements of T.2. – Tolerance values when operated in the temperature range of 10 °C to 30 °C (50 °F to 86 °F) or within the range specified by the meter manufacturer.

(c) If the manufacturer specifies a temperature range, the range shall be at least 20 °C (36 °F).

(Added 1993) (Amended 1995 and 1996)

S.2. Design of Grain Moisture Meters

S.2.1. Minimum Sample Size. - Meters shall be designed to measure the moisture content of representative-size grain samples. The minimum allowable sample size used in analysis shall be 100 g or 400 kernels or seeds, whichever is smaller.
(Added 1993) (Amended 1995)

S.2.2. Electric Power Supply.

S.2.2.1. Power Supply, Voltage and Frequency.

(a) A meter that operates using alternating current must perform within the tolerances defined in Section T.2. Tolerance Values over the line voltage range 100 V to 130 V, or 200 V to 250 V rms as designed, and over the frequency range of 59.5 Hz to 60.5 Hz.

(b) Battery-operated instruments shall not indicate or record values outside the applicable tolerance limits when battery power output is excessive or deficient.

S.2.2.2. Power Interruption. - A power interruption shall not cause an indicating or recording element to display or record any values outside the applicable tolerance limits.
(Added 1988)

S.2.3 Level-Indicating Means. - A meter shall be equipped with a level indicator and leveling adjustments if its performance is changed by an amount greater than the applicable tolerance when the meter is moved from a level position to a position that is out of level in any upright direction by up to 5 percent (approximately 3 degrees).

The level-indicating means shall be readable without removing any meter parts requiring a tool.
(Added 1988) (Amended 1994)

S.2.4. Calibration Integrity.

S.2.4.1. Calibration Version. - A meter must be capable of displaying either calibration constants, a unique calibration name, or a unique calibration version number for use in verifying that the latest version of the calibration is being used to make moisture content and test weight per bushel determinations.
(Added 1993) (Amended 1995 and 2003)

S.2.4.2. Calibration Corruption. - If calibration constants are digitally stored in an electronically alterable form, the meter shall be designed to make automatic checks to detect corruption of calibration constants. An error message must be displayed if calibration constants have been electronically altered.
(Added 1993) (Amended 1995)

S.2.4.3. Calibration Transfer. *- The instrument hardware/software design and calibration procedures shall permit calibration development and the transfer of calibrations between instruments of like models without requiring user slope or bias adjustments.*

[Note: Only the manufacturer or the manufacturer's designated service agency may make standardization adjustments on moisture meters. This does not preclude the possibility of the operator installing manufacturer-specified calibration constants under the instructions of the manufacturer or its designated service agency.] Standardization adjustments (not to be confused with grain calibrations) are those physical adjustments or software parameters which make meters of like type respond identically to the grain(s) being measured.
[Nonretroactive as of January 1, 1999.]
(Added 1994) (Amended 1998)

S.2.5. Provision for Sealing. - Provision shall be made for applying a security seal in a manner that requires the security seal to be broken, or for using other approved means of providing security (e.g., audit trail available at the time of inspection as defined in Table S.2.5.*) before any change that affects the metrological integrity of the device can be made to any mechanism.

[*Note: Table S.2.5. is Nonretroactive as of January 1, 1999.]

[Note: Zero-setting and test point adjustments are considered to affect metrological characteristics and must be sealed.]
(Added 1993) (Amended 1995 and 1997)

S.2.6. Determination of Quantity and Temperature. - The moisture meter system shall not require the operator to judge the precise volume or weight and temperature needed to make an accurate moisture determination. External grinding, weighing, and temperature measurement operations are not permitted. In addition, if the meter is capable of measuring test weight per bushel, determination of sample volume and weight for this measurement shall be fully automatic *and means shall be provided to ensure that measurements of test weight per volume are not allowed to be displayed or printed when an insufficient sample volume is available to provide an accurate measurement.*
[Nonretroactive as of January 1, 2004]
(Added 1994) (Amended 1995 and 2003)

S.3. Accessory Equipment - When the operating instructions for a moisture meter require accessory equipment separate from and external to the moisture meter, such equipment shall be appropriate and complete for the measurement.

S.4. Operating Instructions and Use Limitations. – The manufacturer shall furnish operating instructions for the device and accessories that include complete information concerning the accuracy, sensitivity, and use of accessory equipment necessary in obtaining a moisture content. Operating instructions shall include the following information:

(a) name and address or trademark of the manufacturer;

(b) the type or design of the device with which it is intended to be used;

(c) date of issue;

(d) the kinds or classes of grain or seed for which the device is designed to measure moisture content and test weight per bushel;
(Amended 2003)

(e) the limitations of use, including but not confined to the moisture measurement range, grain or seed temperature, maximum allowable temperature difference between grain sample and meter, kind or class of grain or seed, moisture meter temperature, voltage and frequency ranges, electro-magnetic interferences, and necessary accessory equipment.

(Added 1984)

N. Notes

N.1. Testing Procedures. Field evaluation of grain moisture meters shall be performed by one of the following methods:

N.1.1. Air Oven Reference Method Transfer Standards. Official grain samples shall be used as the official transfer standards with moisture content and test weight per bushel values assigned by the reference methods. The reference methods for moisture shall be the oven drying methods as specified by the USDA GIPSA. The test weight per bushel value assigned to a test weight transfer standard shall be the average of 10 test weight per bushel determinations using the quart kettle test weight per bushel apparatus as specified by the USDA GIPSA. Tolerances shall be applied to the average of at least three measurements on each official grain sample. Official grain samples shall be clean and naturally moist, but not tempered (i.e., water not added).

(Amended 1992, 2001 and 2003)

N.1.2. Minimum Test. - A minimum test of a grain moisture meter shall consist of tests using samples (need not exceed three) of each grain or seed type for which the device is used, and for each grain or seed type shall include the following:

(a) tests of moisture indications, using samples having at least two different moisture content values within the operating range of the device; and

(b) if applicable, tests of test weight per volume indications, with at least the lowest moisture samples used in (a) above.

(Amended 1986, 1989 and 2003)

N.1.3. Meter to Like-Type Meter Method Transfer Standards. - Properly standardized reference meters using National Type Evaluation Program approved calibrations shall be used as transfer standards. A reference meter shall be of the same type as the meter under test. Tests shall be conducted side-by-side using, as a comparison medium, grain samples that are clean and naturally moist, but not tempered (i.e., water not added).

(Added 2001)

T. Tolerances

T.1. To Underregistration and to Overregistration. - The tolerances hereinafter prescribed shall be applied to errors of underregistration and errors of overregistration.

T.2. Air Oven Reference Method. - Maintenance and acceptance tolerances shall be as shown in Table T.2.1. Tolerances are expressed as a fraction of the percent moisture content of the official grain sample, together with a minimum tolerance.

(Amended 2001)

Table T.2.1. Acceptance and Maintenance Tolerances Air Oven Reference Method

Type of Grain, Class, or Seed	Tolerance	Minimum Tolerance
Corn, oats, rice, Sorghum, sunflower	0.05 of the percent moisture content	0.8 percent in moisture content
All other cereal grains and oil seeds	0.04 of the percent moisture content	0.7 percent in moisture content

(Amended 2001)

T.2.2. Meter to Like-Type Meter Method. - Maintenance and acceptance tolerances shall be as shown in Table T.2.2. The tolerances shall apply to all types of grain and seed.

(Added 2001)

Table T.2.2. Acceptance and Maintenance Tolerances Meter to Like Type Meter Method

Sample Reference Moisture	Tolerance
Up to 22 percent	0.5 percent in moisture content

(Table Added 2001)

T.3. For Test Weight Per Bushel Indications or Recorded Representations. - The maintenance and acceptance tolerances on test weight per bushel indications or recorded representations shall be as shown in Table T.3. Tolerances are (+) positive or (-) negative with respect to the value assigned to the official grain sample.
(Amended 1992 and 2003)

Table T.3. Acceptance and Maintenance Tolerances Test Weight Per Bushel

Type of Grain or Seed	Tolerance (Pounds Per Bushel)
Corn, oats	0.8
All wheat classes	0.5
Soybeans, all barley classes, all rice classes, sunflower, sorghum	0.7

(Added 2003)

UR. User Requirements

UR.1. Selection Requirements.

UR.1.1. Value of the Smallest Unit on Primary Indicating and Recording Elements. - The resolution of the moisture meter display shall be 0.1% moisture and 0.1 pound per bushel test weight during commercial use.
(Amended 2003)

UR.1.2. See G-UR.1.2.

UR.2. Installation Requirements. - The grain moisture meter shall be installed in an environment within the range of temperature and/or other environmental factors specified in the operating instructions.

UR.3. Use Requirements.

UR.3.1. Operating Instructions. - The operating instructions for the use of the grain moisture meter shall be readily available to the user, service technician, and weights and measures official at the place of installation. It shall include a list of accessory equipment and the kinds of grain or seed to be measured with the moisture meter.
(Amended 1988)

UR.3.2. Other Devices Not Used for Commercial Measurement. - If there are other moisture meters on the premises not used for trade or determining other charges for services, these devices shall be clearly and conspicuously marked "Not for Use in Trade or Commerce."

UR.3.3. Maintaining Integrity of Grain Samples. - Whenever there is a time lapse (temperature change) between taking the sample and testing the sample, means to prevent condensation of moisture or loss of moisture from grain samples shall be used. For example, a cold grain sample may be kept in a closed container in order to permit the cold grain to come to the operating temperature range of the meter before the grain moisture measurements are made.

UR.3.4. Printed Tickets.

(a) Printed tickets shall be free from any previous indication of moisture content or type of grain or seed selected.

(b) The customer shall be given a printed ticket showing the date, grain type, grain moisture results, test weight per bushel, and calibration version identification. The ticket shall be generated by the grain moisture meter system.
(Amended 1993, 1995 and 2003)

UR.3.5. Accessory Devices. - Accessory devices, if necessary in the determination of a moisture content value, shall be in close proximity to the moisture meter and allow immediate use.

UR.3.6. Sampling. - A grain sample shall be obtained by following appropriate sampling methods and equipment. These include, but are not limited to grain probes of appropriate length used at random locations in the bulk, the use of a pelican sampler, or other techniques and equipment giving equivalent results. The grain sample shall be taken such that it is representative of the lot.

UR.3.7. Location. - See G-UR.3.3.

UR.3.8. Level Condition. - If equipped with a level indicator, a meter shall be maintained in a level condition.
(Added 1988)

UR.3.9. Current Calibration Data. - Grain moisture determinations shall be made using only the most recently published calibration data.

UR.3.10. Posting of Meter Operating Range. - The operating range of the grain moisture meter shall be clearly and conspicuously posted in the place of business such that the information is readily visible from a reasonable customer position. The posted information shall include the following:

(a) The temperature range over which the meter may be used and still comply with the applicable requirements. If the temperature range varies for different grains or seed, the range shall be specified for each.

(b) The moisture range for each grain or seed for which the meter is to be used.

(c) The temperature range for each grain or seed for which the meter is to be used.

(d) The maximum allowable difference in temperature that may exist between the meter and the sample for which an accurate moisture determination can be made.
(Added 1988)

Table S.1.2. Grain Types Considered for Type Evaluation and Calibration and Minimum Acceptable Abbreviations

Grain Type	***Minimum Acceptable Abbreviation***	***Grain Type***	***Minimum Acceptable Abbreviation***
Corn	*CORN*	*Soybeans*	*SOYB*
Durum Wheat *Soft White Wheat* *Hard Red Spring Wheat* *Hard Red Winter Wheat* *Soft Red Winter Wheat* *Hard White Wheat*	*DURW* *SWW* *HRSW* *HRWW* *SRWW* *HDWW*	*Two-rowed Barley* *Six-rowed Barley* *Oats*	*TRB* *SRB* *OATS*
Sunflower Seed (Oil)	*SUNF*	*Long Grain Rough Rice* *Medium Grain Rough Rice*	*LGRR* *MGRR*
Grain Sorghum	*SORG* <u>*or*</u> *MILO*	*Small Oil Seeds (under consideration)*	

[Nonretroactive as of January 1, 1998] (Table Added 1993) (Amended 1995, 1998)

Table S.2.5. Categories of Device and Methods of Sealing	
Categories of Device	*Method of Sealing*
Category 1: No remote configuration capability.	*Seal by physical seal or two event counters: One for calibration parameters (000 to 999) and one for configuration parameters (000 to 999). If equipped with event counters, the device must be capable of displaying, or printing through the device or through another on-site device, the contents of the counters.*
Category 2: Remote configuration capability, but access is controlled by physical hardware. *A device shall clearly indicate that it is in the remote configuration mode and shall not be capable of operating in the measure mode while enabled for remote configuration.*	*The hardware enabling access for remote communication must be at the device and sealed using a physical seal or two event counters; one for calibration parameters (000 to 999) and one for configuration parameters (000 to 999). If equipped with event counters, the device must be capable of displaying, or printing through the device or through another on-site device, the contents of the counters.*
Category 3: Remote configuration capability access may be unlimited or controlled through a software switch (e.g., password). *When accessed remotely for the purpose of modifying sealable parameters, the device shall clearly indicate that it is in the configuration mode and shall not be capable of operating in the measuring mode.*	*An event logger is required in the device; it must include an event counter (000 to 999), the parameter ID, the date and time of the change, and the new value of the parameter (for calibration changes consisting of multiple constants, the calibration version number may be used rather than the calibration constants). A printed copy of the information must be available through the device or through another on-site device. The event logger shall have a capacity to retain records equal to twenty-five (25) times the number of sealable parameters in the device, but not more than 1000 records are required. (Note: Does not require 1000 changes to be stored for each parameter.)*
Category 3a: No remote capability, but operator is able to make changes that affect the metrological integrity of the device (e.g., slope, bias, etc.) in normal operation.	*Same as Category 3.*
Category 3b: No remote capability, but access to metrological parameters is controlled through a software switch (e.g., password).	*Same as Category 3.*

[Table Nonretroactive as of January 1, 1999.] (Amended 1998)

[THIS PAGE LEFT INTENTIONALLY BLANK]

Sec. 5.56.(b) Grain Moisture Meters

Section 5.56. has been reorganized into two Sections. This Section, 5.56.(b), is applicable to all non-NTEP grain moisture meters manufactured or placed into service before January 1, 1998. (Code reorganized and renumbered 1996.)

A. Application

A.1. This code applies to grain moisture meters; that is, devices used to indicate directly or through conversion and/or correction tables the moisture content of cereal grain and oil seeds. The code consists of general requirements applicable to all moisture meters and specific requirements applicable only to certain types of moisture meters.

A.2. This code does not apply to devices used for in-motion measurement of grain moisture content or seed moisture content.

A.3. See also Sec. 1.10; General Code requirements.

S. Specifications

S.1. Design of Indicating and Recording Elements and of Recorded Representations.

S.1.1. Primary Elements, General. - A meter shall be equipped with a primary indicating element and may also be equipped with a primary recording element. If the meter indicates directly and/or is equipped to record, the meter shall indicate and/or record its measurements in terms of percent moisture content, wet basis. Subdivisions of this unit shall be in terms of decimal subdivisions (not fractions). If the meter indicates in the conventional scale and requires conversion or correction tables, the resulting values after use of such tables shall be in terms of percent moisture content, wet basis. Subdivisions of this unit shall be in terms of decimal subdivisions (not fractions).

S.1.2. Digital Indications.

S.1.2.1. Measurement Completion. - A digital indicating element shall not display any values (either moisture content or conventional scale) before the end of the measurement cycle.

S.1.3. Graduations.

S.1.3.1. Length. - Graduations shall be so varied in length that they may be conveniently read.

S.1.3.2. Width. - In any series of graduations, the width of a graduation shall in no case be greater than the width of the minimum clear interval between graduations, and the width of the main graduations shall be not more than 50 percent greater than the width of subordinate graduations. Graduations shall in no case be less than 0.2 mm (0.008 in) in width.

S.1.3.3. Clear Interval Between Graduations. - The clear interval shall be not less than 0.75 mm (0.03 in) between graduations. If the graduations are not parallel, the measurement shall be made:

(a) along the line of relative movement between the graduations at the end of the indicator; or

(b) if the indicator is continuous, at the point of widest separation of the graduations.

S.1.4. Indicators.

S.1.4.1. Symmetry. - The index of an indicator shall be symmetrical with respect to the graduations, at least throughout that portion of its length associated with the graduations.

S.1.4.2. Length. - The index of an indicator shall reach to the finest graduations with which it is used, unless the indicator and the graduations are in the same plane, in which case the distance between the end of the indicator and the ends of the graduations, measured along the line of the graduations, shall be not more than 1.0 mm (0.04 in).

S.1.4.3. Width. - The width of the index of an indicator in relation to the series of graduations with which it is used shall be not greater than:

(a) the width of the widest graduation; nor

(b) the width of the minimum clear interval between graduations.

When the index of an indicator extends along the entire length of a graduation, that portion of the index of the indicator that may be brought into coincidence with the graduation shall be of the same width as the graduation throughout the length of the index that coincides with the graduation.

S.1.4.4. Clearance. - The clearance between the index of an indicator and the graduations shall in no case be more than 1.5 mm (0.06 in).

S.1.4.5. Parallax. - Parallax effects shall be reduced to the practicable minimum.

S.1.5. Recording Elements.

S.1.5.1. General. - If a meter is equipped with a recording element, it shall record in terms of percent moisture content, wet basis only, and not in terms of conventional scale.

S.1.5.2. Measurement Completion. - A recording element shall not record any values before the end of the measurement cycle.

S.1.5.3. Range of Moisture Content. - A recording element shall not record any values when the moisture content of the grain sample is beyond the operating range of the device.

S.1.6. Design of Direct Reading Grain Moisture Meters.

S.1.6.1. Grain or Seed Kind and Class Selection and Recording. - Provision shall be made for selecting and recording, if equipped to record, the kind and class (as appropriate) of grain or seed to be measured. The means to select the kind and class of grain or seed shall be readily visible and the kind and class of grain or seed selected shall be clearly and definitely identified in letters (such as Wheat or WHT, HRWW, etc.).

S.1.6.2. Operating Range. *- A meter shall automatically and clearly indicate when the operating range of the meter has been exceeded or the manufacturer shall:*

(a) clearly and conspicuously mark the operating ranges on the meter; or

(b) furnish the operating ranges of the meter and the means to clearly and conspicuously display this information on or immediately adjacent to the device.

The operating range shall specify the following:

(a) the temperature range over which the meter may be used and still comply with the applicable requirements;

(b) the moisture range for each grain or seed for which the meter is to be used;

(c) the temperature range for each grain or seed for which the meter is to be used; and

(d) the maximum allowable difference in temperature between the meter and the sample for which an accurate moisture determination can be made.

Examples of clearly indicating these conditions include an error indication, flashing the displayed moisture value, or blanking the display. [Nonretroactive as of January 1, 1989.]
(Amended 1986 and 1988)

S.1.6.3. Value of Smallest Unit. – The value of the minimum indicated or recorded moisture indication shall not be greater than 0.1%.
(Amended 2003)

S.1.7. Electric Power Supply.

S.1.7.1. Power Supply, Voltage and Frequency.

(a) A meter that operates using alternating current must perform within the tolerances defined in Section T.2. - Tolerance Values over the line voltage range 100 V to 130 V or 200 V to 250 V rms as designed, and over the frequency range of 59.5 Hz to 60.5 Hz.

(b) Battery-operated instruments shall not indicate or record values outside the applicable tolerance limits when battery power output is excessive or deficient. [Nonretroactive as of January 1, 1989.]

S.1.7.2. Power Interruption. *- A power interruption shall not cause an indicating or recording element to display or record any values outside the applicable tolerance limits. [Nonretroactive as of January 1, 1989.] (Added 1988)*

S.1.8. Level Indicating Means. *- A meter shall be equipped with a level indicator and leveling adjustments if its performance is changed by an amount greater than the applicable tolerance when the meter is moved from a level position to a position that is out of level in any upright direction by up to 5 percent (approximately 3 degrees).*

The level-indicating means shall be readable without removing any meter parts requiring a tool. [Nonretroactive as of January 1, 1989.]
(Added 1988) (Amended 1994)

S.1.9. Operating Temperature.

(a) A meter shall not display or record any usable values until the operating temperature necessary for accurate determination has been attained, or the meter shall bear a conspicuous statement adjacent to the indication stating that the meter shall be turned on for a time period specified by the manufacturer prior to use.

(b) A meter shall meet the requirements of T.2. - Tolerance Values when operated in the temperature range of 2 °C to 40 °C (35 °F to 104 °F) or within the range specified by the meter manufacturer.

(c) If the manufacturer specifies a temperature range, the range shall be at least 10 °C (20 °F) and shall be marked on the device.

[Nonretroactive as of January 1, 1989.]
(Added 1988)

S.2. Design of Measuring Elements.

S.2.1. Design of Zero-Setting and Test Point Mechanisms. - If a grain moisture meter is equipped with a zero setting and/or test point mechanism(s), this (these) mechanism(s) shall be adjustable only with a tool outside and entirely separate from this mechanism or enclosed in a cabinet. This requirement shall not apply to manual operations that the operator must make (following operating instructions) in order to obtain a meter reading on a grain sample.

S.2.2. Provision for Sealing. - Provision shall be made for applying a security seal in a manner that requires the security seal to be broken before an adjustment can be made to any component of the grain moisture meter that is set by the manufacturer or authorized service representative and not intended to be adjusted by the user.

S.3. Accessory Equipment. - When the operating instructions for a moisture meter require accessory equipment separate from and external to the moisture meter, such equipment shall be appropriate and complete for the measurement.

S.3.1. Grain-Test Scale. - If the moisture meter requires the weighing of the grain sample, the weighing device shall meet the requirements of the General Code and those applicable portions of the Scales Code.

S.3.2. Thermometers or Other Temperature Sensing Equipment.

(a) The temperature sensing equipment or thermometer shall be designed to be in direct contact with a grain sample in a closed container. It is acceptable to insert thermometer through a small hole in the lid of the container used to hold the grain sample.

(b) A separate thermometer or other temperature sensing equipment shall have temperature divisions not greater than the temperature increments used by the manufacturer in the correction table.

(Amended 1988)

S.3.3. Conversion and Correction Tables. - Conversion and correction tables, charts, graphs, slide rules, or other apparatus to convert the conventional scale values read from a moisture meter to moisture content values, if such apparatus is required, shall be appropriate and correct for the moisture meter being used and shall be marked with the following information:

(a) name and address or trademark of the manufacturer;

(b) the type or design of the device with which it is intended to be used;

(c) date of issue;

(d) the kind or classes of grain or seed for which the device is designed to measure moisture content;

(e) the limitations of use, including but not confined to the moisture measurement range, grain or seed temperature, kind or class of grain or seed, moisture meter temperature, voltage and frequency ranges, electromagnetic interferences, and necessary accessory equipment; but

(f) values exceeding any measurement range shall not be included.

(Added 1984)

S.3.4. Operating Instructions and Use Limitations. - Operating instructions shall be furnished by the manufacturer with each device with all of the information required by paragraph S.3.3. Complete information concerning the accuracy, sensitivity, and use of accessory equipment (e.g., test weight per bushel equipment, thermometer, etc.) necessary in obtaining a moisture content shall be included.

N. Notes

N.1. Testing Procedures.

N.1.1. Transfer Standards. - Official grain samples shall be used as the official transfer standards with moisture content values assigned by the reference methods. The reference methods shall be the oven drying methods as specified by the USDA GIPSA. Tolerances shall be applied to the average of at least three measurements on each official grain sample. Official grain samples shall be clean and naturally moist, but not tempered (i.e., water not added).
(Amended 1992)

N.1.2. Minimum Test. - A minimum test of a grain moisture meter shall consist of tests:

(a) with samples (need not exceed three) of each grain or seed for which the device is used, and

(b) with samples having at least two different moisture content values within the operating range of the device.

(Amended 1986, 1989)

N.1.3. Temperature Measuring Equipment. - The accuracy of accessory temperature measuring equipment shall be determined by comparison with a calibrated temperature sensor, such as a total immersion thermometer with 0.1 °C (0.2 °F) sub-divisions, indicating over a range of from 0 °C to 40 °C (32 °F to 104 °F) with a maximum error of ±0.1 °C (0.2 °F). Tests shall be conducted at two temperatures using liquid baths (e.g., ice water and room temperature water). The two temperatures selected shall not exceed the range of temperatures identified in the moisture meter operating instructions.
(Amended 1988)

T. Tolerances[1]

T.1. To Underregistration and to Overregistration. - The tolerances hereinafter prescribed shall be applied to errors of under registration and errors of overregistration.

T.2. Tolerance Values. - Maintenance and acceptance tolerances shall be as shown in Table T.2. Tolerances are expressed as a fraction of the percent moisture content of the official grain sample, together with a minimum tolerance.

Table T.2. Acceptance and Maintenance Tolerances For Grain Moisture Meters

Type of Grain or Seed	Tolerance	Minimum Tolerance
Corn, oats, rice, sorghum, sunflower	0.05 of the percent moisture content	0.8 percent in moisture content
All other cereal grains and oil seeds	0.04 of the percent moisture content	0.7 percent in moisture content

T.3. For Test Weight Per Bushel Devices. - The maintenance and acceptance tolerances on separate test weight per bushel devices used to determine the test weight per bushel of grain samples for the purposes of making density corrections in moisture determination shall be 0.193 kg/hL or 0.15 lb/bu. The test methods used shall be those specified by the USDA GIPSA using a dockage-free sample of dry hard red winter wheat.
(Amended 1992 and 2003)

T.4. Thermometers or Other Temperature Sensing Equipment. - The tolerance for a separate thermometer or temperature sensing equipment used to determine the temperature of grain samples for the purpose of making temperature corrections in moisture determinations shall be ±0.5 °C (1 °F).
(Added 1988)

UR. User Requirements

UR.1. Selection Requirements.

UR.1.1. Value of the Smallest Unit on Primary Indicating and Recording Elements. - The value of the smallest unit on a moisture meter, whether the moisture meter reads directly in terms of moisture content, or when the conventional scale unit is converted or corrected to moisture content, shall be equal to or less than 0.1 percent.

UR.1.2. Environment. - Equipment shall be suitable for the environment in which it is used including, but not limited to, the effects of wind, weather, and RFI.
(Added 2003)

[1] These tolerances do not apply to tests in which grain moisture meters are the transfer standards.

UR.2. Installation Requirements. - The grain moisture meter shall be installed in an environment within the range of temperature and/or other environmental factors specified (a) in the operating manual, and (b) on the conversion or correction tables if such tables are necessary for the operation of the device.

UR.3. Use Requirements.

UR.3.1. Operating Instructions. - The operating instructions for the use of the grain moisture meter shall be readily available to the user, service technician, and weights and measures official at the place of installation. It shall include a list of accessory equipment, conversion and correction charts if any are required to obtain moisture content values, and the kinds of grain or seed to be measured with the moisture meter.
(Amended 1988)

UR.3.2. Other Devices Not Used for Commercial Measurement. - If there are other moisture meters on the premises not used for trade or determining other charges for services, these devices shall be clearly and conspicuously marked "Not for Use in Trade or Commerce."

UR.3.3. Maintaining Integrity of Grain Samples. - Whenever there is a time lapse (temperature change) between taking the sample and testing the sample, means to prevent condensation of moisture or loss of moisture from grain samples shall be used. For example, a cold grain sample may be kept in a closed container in order to permit the cold grain to come to the operating temperature range of the meter before the grain moisture measurements are made.

UR.3.4. Printed Tickets. - Printed tickets shall be free from any previous indication of moisture content or type of grain or seed selected.

UR.3.5. Accessory Devices. - Accessory devices, if necessary in the determination of a moisture content value, shall be in close proximity to the moisture meter and allow immediate use.

UR.3.6. Sampling. - A grain sample shall be obtained by following appropriate sampling methods and equipment. These include, but are not limited to grain probes of appropriate length used at random locations in the bulk, the use of a pelican sampler, or other techniques and equipment giving equivalent results. The grain sample shall be taken such that it is representative of the lot.

UR.3.7. Location. - See G-UR.3.3.

UR.3.8. Level Condition. - If equipped with a level indicator, a meter shall be maintained in a level condition.
(Added 1988)

UR.3.9. Operating Limitation. - Unless otherwise specified by the meter manufacturer, moisture determinations shall not be made when the difference in temperatures between the grain sample and the meter exceeds 10 °C (20 °F).
(Added 1988)

UR.3.10. Current Calibration Chart or Data. - Grain moisture determinations shall be made using only the most recently published calibration charts or calibration data.
(Added 1988)

UR.3.11. Posting of Meter Operating Range. - The operating range of the grain moisture meter shall be clearly and conspicuously posted in the place of business such that the information is readily visible from a reasonable customer position. The posted information shall include the following:

(a) The temperature range over which the meter may be used and still comply with the applicable requirements. If the temperature range varies for different grains or seed, the range shall be specified for each.

(b) The moisture range for each grain or seed for which the meter is to be used.

(c) The temperature range for each grain or seed for which the meter is to be used.

(d) The maximum allowable difference in temperature that may exist between the meter and the sample for which an accurate moisture determination can be made.

(Added 1988)

[THIS PAGE LEFT INTENTIONALLY BLANK]

Sec. 5.58. Multiple Dimension Measuring Devices

The status of Section 5.58. Multiple Dimension Measuring Devices was changed from "tentative" to "permanent" effective January 1, 2005.

A. Application

A.1. General. This code applies to dimension and volume measuring devices used for determining the dimensions and/or volume of objects for the purpose of calculating freight, storage, or postal charges based on the dimensions and/or volume occupied by the object.

A.2. Insofar as they are clearly applicable, the provisions of this code apply also to devices designed to make multiple measurements automatically to determine a volume for other applications as defined by General Code paragraph G A.1.

A.3. In addition to the requirements of this code, multiple dimension measuring devices shall meet the requirements of Section 1.10. General Code.

A.4. This Code does not apply to:

(a) devices designed to indicate automatically (with or without value-computing capabilities) the length of fabric passed through the measuring elements (see Sec. 5.50. for Fabric-Measuring Devices);

(b) devices designed to indicate automatically the length of cordage, rope, wire, cable, or similar flexible material passed through the measuring elements (see Sec. 5.51. for Wire- and Cordage-Measuring Devices); or

(c) any linear measure, measure of length, or devices used to measure individual dimensions for the purpose of assessing a charge per unit of measurement of the individual dimension (see Sec. 5.52. for Linear Measures).

A.5. Type Evaluation. The National Type Evaluation Program will accept for type evaluation only those devices that comply with all requirements of this code.

S. Specifications

S.1. Design of Indicating and Recording Elements and of Recorded Representations.

S.1.1. Zero or Ready Indication.

(a) Provision shall be made to indicate or record either a zero or ready condition.

(b) A zero or ready condition may be indicated by other than a continuous digital zero indication, provided that an effective automatic means is provided to inhibit a measuring operation when the device is in an out-of-zero or non-ready condition.

S.1.2. Digital Indications. Indicated and recorded values shall be presented digitally.

S.1.3. Negative Values. Except when in the tare mode, negative values shall not be indicated or recorded.

S.1.4. Dimensions Indication. If in normal operation the device indicates or records only volume, a testing mode shall be provided to indicate dimensions for all objects measured.

S.1.5. Value of Dimension/Volume Division Units. The value of a device division "d" expressed in a unit of dimension shall be presented in a decimal format with the value of the division expressed as:

(a) 1, 2, or 5; or

(b) a decimal multiple or submultiple of 1, 2, or 5; or

(c) a binary submultiple of a specific inch-pound unit of measure.

Examples: device divisions may be 0.01, 0.02, 0.05; 0.1, 0.2, or 0.5; 1, 2, or 5; 10, 20, 50, or 100; 0.5, 0.25, 0.125, 0.0625, etc.

S.1.5.1. For Indirect Sales. In addition to the values specified in S.1.5., the value of the division may be 0.3 inch and 0.4 inch.

S.1.6. Customer Indications and Recorded Representations. Multiple dimension measuring devices or systems must provide information as specified in Table S.1.6. As a minimum, all devices or systems must be able to meet either Clumn 1 or Clumn II in Table S.1.6.
(Amended 2004)

S.1.7. Minimum Lengths. Except for entries of tare, the minimum length to be measured by a device is 12 divisions. The manufacturer may specify a longer minimum length.
(Amended 2006)

S.1.8. Indications Below Minimum and Above Maximum. When objects are smaller than the minimum dimensions identified in paragraph S.1.7. or larger than any of the maximum dimensions plus 9 d, and/or maximum volume marked on the device plus 9 d, or when a combination of dimensions for the object being measured exceeds the measurement capability of the device, the indicating or recording element shall either:
(Amended 2004)

(a) not indicate or record any usable values, or

(b) identify the indicated or recorded representation with an error indication.

(Amended 2006)

S.1.9. Operating Temperature. An indicating or recording element shall not indicate nor record any usable values until the operating temperature necessary for accurate measuring and a stable zero reference or ready condition has been attained.
(Amended 2006)

S.1.10. Adjustable Components. Adjustable components shall be held securely in adjustment and, except for a zeroing mechanism (when applicable), shall be located within the housing of the element.

Tabls S.1.6. Required Information to be Provided by Multiple Dimension Measuring Systems

Information	Column I[1]	Column II[1]		Column III
	Provided by device	Provided by invoice or other means		Provided by invoice or other means as specified in contractual agreement
		Customer present	Customer not present	
1. Device identification[2]	D or P	P	P	P or A
2. Error message (when applicable)	D or P	P	N/A	N/A
3. Hexahedron* dimensions[3]	D or P	P	P	P or A
4. Hexahedron* volume (if used)[3]	D or P	P	P	P or A
5. Actual weight (if used)[3]	D or P	P	P	P or A
6. Tare (if used)[3]	D or P	N/A	N/A	N/A
7. Hexahedron* measurement statement[4]	D or P or M	P	P	P or G

A = AVAILABLE UPON REQUEST BY CUSTOMER[5]

B = DISPLAYED

G = PUBLISHED GUIDELINES OR CONTRACTS

M = MARKED

N/A = NOT APPLICABLE

P = PRINTED OR RECORDED IN A MEMORY DEVICE AND AVAILABLE UPON REQUEST BY CUSTOMER[5]

Notes:

1 As a minimum all devices or systems must be able to meet either Column I or Column II.

2 This is only required in systems where more than one device or measuring element is being used.

3 Some devices or systems may not utilize all of these values; however, as a minimum either hexahedron dimensions or hexahedron volume must be displayed or printed.

4 This is an explanation that the dimensions and/or volume shown are those of the smallest hexahedron in which the object that was measured may be enclosed rather than those of the object itself.

5 The information "available upon request by customer" shall be retained by the party having issued the invoice for at least 30 calendar days after the date of invoicing.

* Hexahedron = An object with six rectangular, plane surfaces (sides)

(Amended 2004)

S.1.11. Provision for Sealing.

(a) A device shall be designed with provision(s) for applying a security seal that must be broken, or for using other approved means of providing security (e.g., data change audit trail available at the time of inspection), before any change that detrimentally affects the metrological integrity of the device can be made to any measuring element.

(b) Audit trails shall use the format set forth in Table S.1.11.

S.2. Design of Zero and Tare.

S.2.1. Zero or Ready Adjustment. A device shall be equipped with means by which the zero reference or ready condition can be adjusted, or the zero reference or ready condition shall be automatically maintained. The zero reference or ready control circuits shall be interlocked so that their use is prohibited during measurement operations.

S.2.2. Tare. The tare function shall operate only in a backward direction (that is, in a direction of under-registration) with respect to the zero reference or ready condition of the device. The value of the tare division or increment shall be equal to the division of its respective axis on the device. There shall be a clear indication that tare has been taken.

S.3. Systems with Two or More Measuring Elements. A multiple dimension measuring system with a single indicating or recording element, or a combination indicating-recording element, that is coupled to two or more measuring elements with independent measuring systems, shall be provided with means to prohibit the activation of any measuring element (or elements) not in use, and shall be provided with automatic means to indicate clearly and definitely which measuring element is in use.

Note: This requirement does not apply to individual devices that use multiple emitters/sensors within a device in combination to measure objects in the same measurement field. (Amended 2004)

S.4. Marking Requirements. [See also G-S.1., G-S.4., G-S.5.2.5., G-S.6., G-S.7., G-UR.2.1.1., and G-UR.3.1.]

S.4.1. Multiple Dimension Measuring Devices, Main Elements, and Components of Measuring Devices. Multiple dimension measuring devices, main elements of multiple dimension measuring devices when not contained in a single enclosure for the entire dimension/volume measuring device, and other components shall be marked as specified in Table S.4.1.a. and explained in the accompanying notes, Table S.4.1.b.

S.4.2. Location of Marking Information. The required marking information shall be so located that it is readily observable without the necessity of the disassembly of a part requiring the use of any means separate from the device.

Table S.1.11. Categories of Devices and Methods of Sealing for Multiple Dimension Measuring Systems

Categories of Devices	Method of Sealing
Category 1: No remote configuration.	Seal by physical seal or two event counters: one for calibration parameters and one for configuration parameters.
Category 2: Remote configuration capability, but access is controlled by physical hardware. Device shall clearly indicate that it is in the remote configuration mode and record such message if capable of printing in this mode.	The hardware enabling access for remote communication must be at the device and sealed using a physical seal or two event counters: one for calibration parameters and one for configuration parameters.
Category 3. Remote configuration capability access may be unlimited or controlled through a software switch (e.g., password).	An event logger is required in the device; it must include an event counter (000 to 999), the parameter ID, the date and time of the change, and the new value of the parameter. A printed copy of the information must be available through the device or through another on-site device. The event logger shall have a capacity to retain records equal to ten times the number of sealable parameters in the device, but not more than 1000 records are required. (**Note**: Does not require 1000 changes to be stored for each parameter.)

5.58. Multiple Dimension Measuring Devices

Table S.4.1.a. Marking Requirements for Multiple Dimension Measuring Systems				
	Multiple Dimension Measuring Equipment			
To be Marked With	Multiple dimension measuring device and indicating element in same housing	Indicating element not permanently attached to multiple dimension measuring element	Multiple dimension measuring element not permanently attached to the indicating element	Other equipment (1)
Manufacturer's ID	X	X	X	X
Model Designation	X	X	X	X
Serial Number and Prefix	X	X	X	X (2)
Certificate of Conformance Number (8)	X	X	X	X (8)
Minimum and Maximum Dimensions for Each Axis (3)	X	X	X	
Value of Measuring Division, d (for each axis and range)	X	X	X	
Temperature Limits (4)	X	X	X	
Minimum & Maximum Speed (5)	X	X	X	
Special Application (6)	X	X	X	
Limitation of Use (7)	X	X	X	

(Amended 2002 and 2006)

Multiple Dimension Measuring Systems Table S.4.1.b.
Notes for Table S.4.1.a.

1. Necessary to the dimension and/or volume measuring system, but having no effect on the measuring value (e.g., auxiliary remote display, keyboard, etc.).

2. Modules without "intelligence" on a modular system (e.g. printer, keyboard module, etc.) are not required to have serial numbers.

3. The minimum and maximum dimensions (using upper or lower case type) shall be marked. For example:

   Length: min _____ max _____
   Width : min _____ max _____
   Height: min _____ max _____

4. Required if the range is other than -10 °C to 40 °C (14 °F to 104 °F).

5. Multiple dimension measuring devices, which require that the object or device be moved relative to one another, shall be marked with the minimum and maximum speeds at which the device is capable of making measurements that are within the applicable tolerances shall be marked.

6. A device designed for a special application rather than general use shall be conspicuously marked with suitable words visible to the operator and the customer restricting its use to that application.

7. Materials, shapes, structures, combination of object dimensions, speed, or object orientations that are inappropriate for the device or those that are appropriate.

8. Required only if a Certificate of Conformance has been issued for the equipment.

(Amended 2002, 2004 and 2006)

N. Notes

N.1. Test Procedures.

N.1.1. General. The device shall be tested using test standards and objects of known and stable dimensions.

N.1.2. Position Test. Measurements are made using different positions of the test object and consistent with the manufacturer's specified use for the device.

N.1.3. Disturbance Tests, Field Evaluation. A disturbance test shall be conducted at a given installation when the presence of disturbances specified in T.6. has been verified and characterized if those conditions are considered "usual and customary."
(Amended 2002)

N.1.4. Test Object Size. Test objects may vary in size from the smallest dimension to the largest dimension marked on the device, and for field verification examinations, shall be an integer multiple of "d."

N.1.4.1. Test Objects. Verification of devices may be conducted using appropriate test objects of various sizes and of stable dimensions. Test object dimensions must be known to an expanded uncertainty (coverage factor K = 2) of not more than one-third of the applicable device tolerance. The dimensions shall also be checked to the same uncertainty when used at the extreme values of the influence factors.

The dimension of all test objects shall be verified using a reference standard that is traceable to NIST (or equivalent national laboratory) and meet the tolerances expressed in NIST Handbook 44 Fundamental Considerations, paragraph 3.2 (i.e., one-third of the smallest tolerance applied to the device).
(Added 2004)

N.1.5. Digital Zero Stability. A zero indication change test shall be conducted on all devices which show a digital zero. After the removal of any test object, the zero indication shall not change. (Also see G-UR.4.2.)

T. Tolerances

T.1. Design. The tolerance for a multiple dimension measuring device is a performance requirement independent of the design principle used.

T.2. Tolerance Application.

T.2.1. Type Evaluation. For type evaluations, the tolerance values apply to tests within the influence factor limits of temperature and power supply voltage specified in T.5.1. and T.5.2.

T.2.2. Subsequent Verification. For subsequent verifications, the tolerance values apply regardless of the influence factors in effect at the time of the verification. (Also see G-N.2.)

T.2.3. Multi-interval (Variable Division-Value) Devices. For multi-interval devices, the tolerance values are based on the value of the device division of the range in use.

T.3. Tolerance Values. The maintenance and acceptance tolerance values shall be ± 1 division.
(Amended 2004)

T.4. Position Tests. For a test standard measured several times in different positions by the device all indications shall be within applicable tolerances.

T.5. Influence Factors. The following factors are applicable to tests conducted under controlled conditions only.

T.5.1. Temperature. Devices shall satisfy the tolerance requirements under the following temperature conditions.

T.5.1.1. Temperature Limits. If not marked on the device, the temperature limits shall be:

-10 °C to 40 °C (14 °F to 104 °F).

T.5.1.2. Minimum Temperature Range. If temperature limits are specified for the device, the range shall be at least 30 °C or 54 °F.

T.5.1.3. Temperature Effect on Zero Indication. The zero indication shall not vary by more than one division per 5 °C (9 °F) change in temperature.

T.5.2. Power Supply Voltage.

T.5.2.1. Alternating Current Power Supply. Devices that operate using alternating current must perform within the conditions defined in paragraphs T.3 through T.6., inclusive, from -15% to +10% of the marked nominal line voltage(s) at 60 Hz, or the voltage range marked by the manufacturer, at 60 Hz.
(Added 2004)

T.5.2.2. Direct Current Power Supply. Devices that operate using direct current shall operate and perform within the applicable tolerance at any voltage level at which the device is capable of displaying metrological registrations.
(Added 2004)

T.6. Disturbances, Field Evaluation. The following requirements apply to devices when subjected to disturbances which may normally exist in the surrounding environment. These disturbances include radio frequency interference (RFI), electromagnetic interference (EMI), acoustic changes, ambient light emissions, etc. The difference between the measurement indication with the disturbance and the measurement indication without the disturbance shall not exceed one division "d" or the equipment shall:

(a) blank the indication, or

(b) provide an error message, or

(c) the indication shall be so completely unstable that it could not be interpreted, or transmitted into memory or to a recording element, as a correct measurement value.

UR. User Requirements

UR.1. Selection Requirements. Equipment shall be suitable for the service in which it is used with respect to elements of its design, including but not limited to, its maximum capacity, value of the division, minimum capacity, and computing capability.

UR.1.1. Value of the Indicated and Recorded Division. The value of the division recorded shall be the same as the division value indicated.

UR.2. Installation Requirements.

UR.2.1. Supports. A device that is portable and is being used on a counter, table, or the floor shall be so positioned that it is firmly and securely supported.

UR.2.2. Foundation, Supports, and Clearance. The foundations and support of a device installed in a fixed location shall be such as to provide strength, rigidity, and permanence of all components, and clearance shall be provided around all live parts to the extent that no contacts may result when the measuring element is empty, nor throughout the performance range of the device such that the operation or performance of the device is adversely affected.

UR.2.3. Protection From Environmental Factors. The indicating and measuring elements of a device shall be adequately protected from environmental factors such as wind, weather, and RFI that may adversely affect the operation or performance of the device.

UR.3. Use Requirements.

UR.3.1. Minimum and Maximum Measuring Ranges. A device shall not be used to measure objects smaller than the minimum or larger than the maximum dimensions marked on the device.

UR.3.2. Special Designs. A multiple dimension measuring device designed and marked for a special application shall not be used for other than its intended purpose.

UR.4. Maintenance Requirements.

UR.4.1. Zero or Ready Condition. The zero-setting adjustment of a multiple dimension measuring device shall be maintained so that, with no object in or on the measuring element, the device shall indicate or record a zero or ready condition.

UR.4.2. Level Condition. If a multiple dimension measuring device is equipped with a level-condition indicator, the device shall be maintained in a level condition.

UR.4.3. Device Modification. The measuring capabilities of a device shall not be changed from the manufacturer's design unless the modification has been approved by the manufacturer and the weights and measures authority having jurisdiction over the device.

UR.5. Customer Information Provided. The user of a multiple dimension measuring device or system shall provide transaction information to the customer as specified in Table UR.5.
(Added 2004)

Table UR.5. Customer Information Provided			
Information	No Coantractual Agreement		Contractual Agreement
	Customer Present	Customer Not Present	
1. Object identification	N/A	P	P or A
2. Billing method (scale or dimensional weight if used)	D or P	P	P or A
3. Billing rate or rate chart	D or P or A	P or G or A	P or A
4. Dimensional weight (if used)	P	P	P or A
5. Conversion factor (if dimensional weight is used)	D or P or A	P	P or G
6. Dimensional weight statement[1] (if dimensional weight is used)	D or P	P	P or G
7. Total price	P	P	P or A

A = AVAILABLE UPON REQUEST BY CUSTOMER[2]

D = DISPLAYED

G = PUBLISHED GUIDELINES OR CONTRACTS

M = MARKED

N/A = NOT APPLICABLE

P = PRINTED

Notes:

[1] This is an explanation that the dimensional weight is not a true weight but is a calculated value obtained by applying a conversion factor to the hexahedron dimensions or volume of the object.

[2] The information "available upon request by customer" shall be retained by the party having issued the invoice for at least 30 calendar days after the date of invoicing.

Hexahedron = An object with six rectangular, plane surfaces (sides).

(Added 2004)

[THIS PAGE LEFT INTENTIONALLY BLANK]

Sec. 5.59. Electronic Livestock, Meat, and Poultry Evaluation Systems and/or Devices - Tentative Code

This tentative code has only a trial or experimental status and is not intended to be enforced. The requirements are designed for study prior to the development and adoption of a final Code for Livestock, Meat, and Poultry Evaluation Systems and/or Devices. Officials wanting to conduct an official examination of a device or system are advised to see paragraph G-A.3. Special and Unclassified Equipment.

A. Application

A.1. This code applies to electronic devices or systems for measuring the composition or quality constituents of live animals, livestock and poultry carcasses, and individual cuts of meat or a combination thereof for the purpose of determining value.

A.2. See also Sec. 1.10; General Code requirements.

A.3. This code does not apply to scales used to weigh live animals, livestock and poultry carcasses, and individual cuts of meat unless the scales are part of an integrated system designed to measure composition or quality constituents. Scales used in integrated systems must also meet NIST Handbook 44 Section 2.20. requirements.

S. Specifications

S.1. Design and Manufacture. - All design and manufacturing specifications shall comply with ASTM Standard F 2342 Standard Specification for Design and Construction of Composition or Quality Constituent Measuring Devices or Systems.

N. Notes

N.1. Method of Test. - Performance tests shall be conducted in accordance with ASTM Standard F 2343 Test Method for Livestock, Meat, and Poultry Evaluation Devices.

N.2. Testing Standards. - American Society for Testing Materials (ASTM) Standard F 2343 requires device or system users to maintain accurate reference standards that meet the tolerance expressed in NIST Handbook 44 Fundamental Considerations, paragraph 3.2. (i.e., one-third of the smallest tolerance applied**).**

N.3. Verification. - Device or system users are required to verify and document the accuracy of a device or system on each production day as specified by ASTM Standard F 2341 Standard Practice of User Requirements for Livestock, Meat, and Poultry Evaluation Devices or Systems.

N.3.1. Official Tests. - Officials are encouraged to periodically witness the required "in house" verification of accuracy. Officials may also conduct official tests using the on-site testing standards or other appropriate standards belonging to the jurisdiction with statutory authority over the device or system.

T. Tolerances

T.1. Tolerances on Individual Measurements. – Maintenance and acceptance tolerances on an individual measurement shall be as shown in Table T.1.

Table T.1. Tolerances

Individual linear measurement of a single constituent	± 1 mm (0.039 in)
Measurement of area	± 1.6 cm^2 (0.25 in^2)
For measurements of other constituents	As specified in ASTM Standard F 2343

UR. User Requirements

UR.1. Installation Requirements.

UR.1.1. Installation. - All devices and systems shall be installed in accordance with manufacturer's instructions.

UR.2. Maintenance of Equipment.

UR.2.1. Maintenance. - All devices and systems shall be continually maintained in an accurate condition and in accordance with the manufacturer's instructions and ASTM Standard F 2341.

UR.3. Use requirements.

UR.3.1. Limitation of Use. - All devices and systems shall be used to make measurements in a manner specified by the manufacturer.

UR.4. Testing Standards. - The user of a commercial device shall make available to the official with statutory authority over the device testing standards that meet the tolerance expressed in Fundamental Considerations, paragraph 3.2. (i.e., one-third of the smallest tolerance applied). The accuracy of the testing standards shall be verified annually or on a frequency as required by the official with statutory authority and shall be traceable to the appropriate SI standard.

[THIS PAGE LEFT INTENTIONALLY BLANK]

Article 2. Specifications and Tolerances and Other Technical Requirements for Commercial Weighing and Measuring Devices Not Included in Handbook 44

4010. Application. - This article and Articles 2.1, 2.2 and 2.3 apply to tolerances, specifications and other technical requirements for commercial weighing and measuring devices that are not incorporated as part of National Institute of Standards and Technology's Handbook 44.

[THIS PAGE LEFT INTENTIONALLY BLANK]

Article 2.1. Liquefied Petroleum Gas Tanks When Mounted On Highway Vehicles and Used as Measures

4012. A. Application.

A.1. This code applies to liquefied petroleum gas tanks when mounted on highway vehicles and used as commercial measures. The code does not apply to the following devices:

(a) Devices used solely for dispensing a product in connection with operations in which the amount dispensed does not affect customer charges.

(b) Meters mounted on liquefied petroleum gas tanks (for which see code for Liquefied Petroleum Gas Meters).

A.2. See also General Code requirements.

4012.1. S. Specifications.

S.1. Design of Liquefied Petroleum Gas Tanks.

S.1.1. Tank Requirements. Liquefied petroleum gas tanks when used as measures shall be so constructed and marked to fully comply with all requirements of the California State Department of Industrial Relations whenever such Department has jurisdiction pertaining to liquefied petroleum gas tanks.

S.1.2. Completeness of Delivery. A tank shall be so constructed that, when it is standing on a level surface, complete delivery can be made.

S.2. Design and Location of Liquefied Petroleum Gas Tank Gaging Devices.

S.2.1. General. A dip pipe shall be so designed that it will distinctly and unmistakably define a capacity point when liquid is in contact with the lowest portion of the dip pipe.

S.2.2. Number of Dip Pipes. When any tank is used as a measure, it shall be provided with one or more dip pipes, one of which shall indicate between 86 percent and 87 percent of the actual total capacity of the tank.

S.2.3. Permanently Installed. Except as provided in S.2.5. and S.2.6., dip pipes shall be permanently installed as an integral part of the tank.

S.2.3.1. Cylindrical Tanks. Dip pipes on a cylindrical tank shall be installed with the location of the internal opening of the dip pipe or dip pipes on a line with the longitudinal axis of the tank midway between the ends. For the purpose of this article, “midway” means that the internal opening of the dip pipe or dip pipes shall not be more than 6 inches from the actual midway distance between the ends of the tank.

S.2.3.2. Spherical Tanks. The dip pipe or dip pipes on a spherical tank shall be installed with the location of the internal opening or openings of the dip pipe or dip pipes in line with the vertical axis of the tank.

S.2.4. Openings. The internal opening of a dip pipe shall be not less than one-quarter inch standard iron pipe size, for at least the first two inches above the liquid, and the internal opening of the dip pipe shall be parallel to the surface of the liquid and shall approach the liquid through the vapor space when the tank is plumb and level. The maximum opening of the bleeder valve shall be a number fifty-four drill size.

S.2.5. Dip Pipes on Valves. Dip pipes which are fastened to a valve or valves and are so installed as to be removable from the container and which are less than one-quarter inch standard iron pipe size shall be permitted only on containers of five hundred pounds water capacity or less.

S.2.6. Removable Dip Pipes. Removable dip pipes may be used on containers having a capacity in excess of five hundred pounds if the opening and at least the first two inches of the dip pipe above the liquid is not less than one-quarter inch standard iron pipe size. Provision shall be made so the dip pipe or dip pipes may be sealed in place by a weights and measures official in such a manner their position cannot be changed or the dip pipe or dip pipes be removed without destroying or mutilating the seal or seals.

S.3. Marking of Capacity. Each liquefied petroleum gas tank used as a measure shall be plainly and conspicuously marked with its capacity. This marking shall appear on the rear or side of the tank, adjacent to the outage indicator valve, in letters, figures, or numerals not less than 3/4 inch in height and not less than 1/2 inch in width. On tanks having one calibrated capacity, the marking shall indicate the tank capacity to the nearest gallon and shall also indicate without qualification that the capacity is measured to the dip pipe. In the case of a liquefied petroleum gas tank having more than one calibrated capacity, the marking required by this section shall indicate the capacity applicable to the respective dip pipe.

A marking statement may be expressed in terms of percentage of fill (i.e., 86-1/2%), if followed by the required marking which states the calibrated capacity in terms of gallons to the dip pipe.

Each and all letters, figures or numerals required by this section shall be of like color or tint and shall contrast with the background of such sign or designation. The required markings shall be the responsibility of the owner of the liquefied petroleum gas tank.

4012.2. N. Notes.

N.1. Test Liquid. Water or light fuel oil shall be used as the test liquid for a liquefied petroleum gas tank.

N.2. Evaporation and Volume Change. Care shall be exercised to reduce to a minimum, evaporation losses and volume changes resulting from changes in temperature of the test liquid.

N.3. Gaging. When a liquefied petroleum gas tank is gaged to determine the proper position for an indicator or to determine what a capacity marking should be, tolerances are not applicable. The indicator shall be set and the tank capacity shall be marked as accurately as practicable.

This requirement applies to new liquefied petroleum gas tanks or following repairs or modifications that might affect tank capacities.

N.4. Adjustment and Remarking. When a liquefied petroleum gas tank is found upon test to have an error in excess of the applicable tolerance, the capacity of the liquefied petroleum gas tank shall be adjusted to agree with its marked capacity, or its marked capacity shall be changed to agree with its capacity as determined by the test.

N.5. Inspection. Weights and measures officials shall not inspect or certify liquefied petroleum gas liquid measuring devices until:

(a) a certificate of inspection covering such equipment has been issued by the Division of Industrial Safety, Department of Industrial Relations of the State of California; or

(b) in the case of equipment requiring inspection by the United States Department of Transportation, a certificate has been issued by that agency applicable to such equipment; or until

(c) bonafide evidence has been presented that such inspection has been requested of the proper agency by the owner or operator of the equipment, and written permission from the proper agency has been received by him to operate the equipment until the requested inspection has been made. The provisions of this section shall not apply to marine terminals, natural gasoline plants, oil refineries or oil tank farms.

4012.4. T. Tolerances.

T.1. Application. The tolerances hereinafter prescribed shall be applied to errors in excess and in deficiency.

T.2. Tolerance Values. Maintenance and acceptance tolerances shall be as shown in Table 1.

TABLE 1. MAINTENANCE AND ACCEPTANCE TOLERANCES ON LIQUEFIED PETROLEUM GAS TANKS

Nominal Capacity	Maintenance and Acceptance Tolerances
Gallons	Gallons
200 or less	1/2
201 to 400, inclusive	3/4
401 to 600, inclusive	1
601 to 800, inclusive	1-1/4
801 to 1,000, inclusive	1-1/2
Over 1,000	Add 1 quart per 200 gallons

4012.5. UR. User Requirements.

UR.1. Filling. A liquefied petroleum gas tank shall stand upon a level surface during the filling.

UR.2. Delivering. During a delivery, a liquefied petroleum gas tank shall be so positioned as to assure complete emptying of tank.

Article 2.2 Electric Watt-Hour Meters

4027. A. Application.

A.1. This code applies to electrical energy sub-meters used as commercial measuring devices. Sub-meters are installed in mobilehome parks, apartment houses, shopping centers and similar establishments which purchase electric service from a serving utility by a master meter and distribute the service to tenants through a sub-metered service system.

A.2. See also General Code requirements.

4027.1. S. Specifications.

S.1. Construction and Workmanship. The meter shall be substantially constructed of good material in a workmanlike manner. Each meter shall conform to all applicable standards of the National Electrical Manufacturers Association and the Edison Electric Institute.

S.2. Cover. The cover of the meter shall be sufficiently strong to withstand ordinary usage. It shall be dustproof, waterproof, and prevent access to the interior without destroying the security seal.

S.3. Terminals. The terminals of the meter shall be arranged so that the possibility of short circuits in removing or replacing the cover, making connections and adjusting the meter is minimized.

S.4. Equipment Grounding. Exposed non-current carrying metal parts of fixed equipment, metal boxes, cabinets, and fittings which are not electrically connected to grounded equipment, shall be grounded as required by National Electrical Code, Article 250.

S.5. Provision for Sealing.

S.5.1. Sealing. Provisions shall be made for applying a security seal to the meter cover, meter sealing ring, and terminal block cover.

S.5.2. Meter Enclosure. Meter enclosures shall be so designed that the cover may be sealed. Provision shall be made for reading the meter without destroying the seal.

S.5.3. Overload Protector Enclosure. Thermal overload protector enclosures shall be designed to facilitate sealing. A provision shall be made for resetting circuit breakers or replacing fuses without destroying the seal.

S.6. Meter Identification. Each meter shall have the following information legibly marked on the front of the nameplate or register:

(a) Manufacturer's name, type designation, and serial number.

(b) Voltage rating.

(c) Test amperes (TA).

(d) Maximum amperes (CL).

(e) Watt-hour or disk constant (kh).

(f) Register ratio (Rr) and multiplier (if 10 or larger).

(g) Frequency rating (Hz).

(h) Number of meter elements (polyphase).

(i) Ratio or rating of auxiliary devices.

4027.2. N. Notes.

N.1. Starting Watts. The rotor for a meter shall rotate continuously when a load is applied to 0.5 amperes.

N.2. Meter Tests. Meters shall be tested at full load and light load:

(a) Full load test shall not be less than the test amperes (TA) of the meter.

(b) Light load test amperes (TA) shall be 5 to 10 percent of the meter TA. However, it may be 20 percent or 5 amps, whichever is less, of the TA when testing a 240-volt, 3-wire, single phase meter with an unbalanced load (energizing a single current coil).

N.3. Test Revolutions. Full and light load tests shall require 8 or more revolutions of the test standard and at least 1 revolution of the meter under test.

N.4. Creep Test. A meter disk that creeps more than one revolution shall be removed from service.

N.5. Meter Register. A meter register shall clearly indicate the number of kilowatt-hours measured by the meter. The register ratio must be indicated on the front of registers that are not an integral part of the meter nameplate.

4027.4. T. Tolerances.

T.1. Application to Underregistration and to Overregistration. The following prescribed tolerances shall be applied to errors of underregistration and errors of overregistration.

T.2. Tolerance Values. Maintenance and acceptance tolerances for electric watt-hour meters shall be as follows for full and light load tests:

(a) Maintenance tolerance shall not exceed 2 percent for full and light loads.

(b) Acceptance tolerance shall not exceed 1 percent for full and light loads. Acceptance tolerances shall be applied to new and rebuilt meters before they have been placed in service.

T.3. Meters with Instrument Transformers. Where instrument transformers are used, the provisions of this section shall apply to the metering equipment as a whole.

4027.5. UR. User Requirements.

UR.1. Selection Requirements.

UR.1.1. Meter Class. The meter class shall equal or exceed the total capacity in amperes of the thermal overload protectors.

UR.1.2. Suitability of Equipment. A meter shall be suitable for use on its electrical system. A 3-wire single phase load which is connected to a 120-208 volt network service shall be metered by a two-stator meter.

UR.2. Installation Requirements.

UR.2.1. Nondomestic Meter Test Facilities. All nondomestic meters shall be provided with the same test facilities that are required of a similar meter by the serving utility.

UR.2.2. Test Blocks. All three-phase, self-contained meter installations shall be equipped with test blocks, that are approved by the serving utility, for safe meter testing.

UR.2.3. Test Switches. All meter installations that are equipped with current or potential transformers, or both, shall have test switches installed, that are approved by the serving utility, for safe meter testing.

UR.2.4. Circuit Closing Devices. All self-contained meter installations that cannot accept a short interruption of the electrical service, for the purpose of testing the meter, shall be equipped with a manual circuit closing device as approved by the serving utility. Automatic circuit closing devices shall not be used on any meter installation.

UR.2.5. Thermal Overload Protectors. The main circuit breaker or main switch and fuses and their auxiliary equipment shall be installed in the load service near its entrance as supplied to the tenant. It is intended to constitute the main control and means of cut-off for the supply to the tenant.

UR.3. Use Requirements.

UR.3.1. Location of Meter. Each meter shall be accessible by an unobstructed entrance or passageway not less than two feet in width and six and one-half feet high. A suitable unobstructed standing space of at least 30 inches wide, 36 inches deep and six and one-half feet high shall be maintained in front of the meter to allow for installation, testing and reading.

UR.3.2. Meter Heights. Meters shall be located not more than 75 inches and not less than 30 inches above the ground or standing surface. The meter height shall be measured to its axis.

UR.3.3. Metered Circuits (Load Service). All electricity used by a tenant shall be taken exclusively from the load service of one meter. All electrical circuits from the meter shall serve only one space, lot, building, room, suite, stall or premise occupied by the tenant and shall be capable of being used at the discretion of the tenant.

UR.3.4. Unmetered Circuits (Line Service). The tenants' electrical circuit shall not be taken from the line terminals of the meter, meter socket or line service. The landlord may utilize this service.

4027.6. Definitions of Terms.

The terms defined here have a special and technical meaning when used in the Electric Watt-hour Meter Code.

ampere. The ampere is the practical unit of electric current. It is the quantity of current caused to flow by a difference of potential of one volt through a resistance of one ohm. One ampere is one coulomb of charge per second.

creep. Creep is when the meter disk rotates continuously with potential applied and the load terminals open circuited.

current. Current is the intensity of the electron flow past any one point in the circuit. Its measurement is in coulombs per second or amperes.

kilowatt. A kilowatt is 1,000 watts.

kilowatt-hour (Kwhr). A kilowatt-hour is 1,000 watt-hours.

landlord. A corporation and/or the person or persons who own the electrical energy sub-meters and line service.

line service. The service conductors connecting the master meter to the tenant's meter and owned by the landlord.

load service. The service conductors connecting the tenant's meter to their electrical loads.

master meter. An electric watt-hour meter owned, maintained and read for billing purposes by the serving utility. All the electrical energy served to a sub-metered service system is recorded by the master meter.

maximum amperes (class or CL). The manufacturer's designated maximum amperes which a meter can measure continuously without damage or exceeding limits of accuracy. Class or the designation CL associated with its numerical value indicates maximum amperes.

meter. An electric watt-hour meter designed to measure and register the integral of an electrical quantity with respect to time.

modern meter. A meter whose disk has a magnetic bearing system.

nonretroactive. Nonretroactive requirements are enforceable only with respect to equipment that is manufactured or placed in commercial service after the effective date. *Nonretroactive requirements are printed herein italic type.* (See Handbook 44, Section 1.10., G-A.6.)

ohm. The ohm is a practical unit of electrical resistance. It is the resistance which allows one ampere to flow when the impressed potential is one volt.

percent registration. Percent registration is calculated as follows:

$$\text{Percent Registration} = \frac{\text{kwhr measured by METER}}{\text{kwhr measured by STANDARD}} \times 100$$

power factor. Cosine of the angle of lag or lead of the voltage and current.

register ratio. The number of revolutions of the gear meshing with the worm or pinion on the rotating element for one revolution of the first dial pointer.

serving utility. Serving utility, as used in this code, means the utility or company who sells electrical energy to landlords for resale.

sub-meter. An electric watt-hour meter owned, maintained and read for billing purposes by the landlord. All the electrical energy registered is used by the tenant.

tenant. The person or persons served electrical energy from a sub-metered service system.

test amperes (TA). The manufacturer’s recommended full load test amperage.

test block. The test block facilitates safe meter testing by disconnecting the meter from the circuit without interrupting the service to the tenant.

thermal overload protector. A circuit breaker or fuse which establishes and limits automatically the maximum current that can be conducted in a circuit.

unity power factor. Unity power factor exists in alternating-current circuits when the voltage and current reverse at the same instant.

volt. A volt is the practical unit of electromotive force. One volt will cause one ampere to flow when impressed across a resistance of one ohm.

watt. A watt is the practical unit of active power and is defined as the rate at which energy is delivered to a circuit. It is the power expended when a direct current of one ampere flows through a resistance of one ohm. In an alternating-current circuit, the power in watts is volts times amperes multiplied by the circuit power factor.

watt-hour. The watt-hour is the total or integrated amount of energy delivered in one hour to a circuit in which the steady or average rate at which energy is expended is one watt.

watt-hour constant (disk constant). The watt-hour constant of a meter is the registration of one revolution of its disk expressed in watt-hours. The constant is usually identified by the symbol K_h.

[THIS PAGE LEFT INTENTIONALLY BLANK]

Article 2.3. Carbon Dioxide Liquid-Measuring Devices

4029. A. Application.

A.1. This code applies to carbon dioxide liquid measuring devices used for the measurement of liquid carbon dioxide.

A.2. This code does not apply to devices used solely for dispensing a product in connection with operations in which the amount dispensed does not affect customer charges.

A.3. The General Code provisions also apply to this device.

4029.1. S. Specifications.

S.1. Design of indicating and recording elements and of recorded representations.

S.1.1. Primary Elements.

S.1.1.1. General. A device shall be equipped with a primary indicating element and may also be equipped with a primary recording element.

S.1.1.2. Units. A device shall indicate and record, if equipped to record, its deliveries in terms of pounds or kilograms; or decimal subdivisions or multiples thereof.

S.1.1.3. Value of Smallest Unit. The value of the smallest unit of indicated delivery, and recorded delivery, if the device is equipped to record, shall not exceed the equivalent of:

(a) for small delivery devices:

(1) one pound, or
(2) one kilogram.

(b) for large delivery devices:

(1) ten pounds, or
(2) ten kilograms.

S.1.1.4. Advancement of Indicating and Recording Elements. Primary indicating and recording elements shall be susceptible of advancement only by the normal operation of the device. However, a device may be cleared by advancing its elements to zero, but only if:

(a) the advancing movement, once started, cannot be stopped until zero is reached, or

(b) in the case of indicating elements only, such elements are automatically obscured until the elements reach the correct zero position.

S.1.1.5. Return to Zero. Primary indicating and recording elements shall be readily returnable to a definite zero indication. Means shall be provided to prevent the return of primary indicating elements and of primary recording elements beyond their correct zero position.

S.1.2. Graduations.

S.1.2.1. Length. Graduations shall be so varied in length that they may be conveniently read.

S.1.2.2. Width. In any series of graduations, the width of a graduation shall in no case be greater than the width of the clear interval between graduations. The width of main graduations shall be not more than 50 percent greater than the width of subordinate graduations. Graduations shall in no case be less than 0.008 inch in width.

S.1.2.3. Clear Interval Between Graduations. The clear interval shall be not less than 0.04 inch. If the graduations are not parallel, the measurement shall be made:

(a) along the line of relative movement between the graduations at the end of the indicator, or

(b) if the indicator is continuous, at the point of widest separation of the graduations.

(See also S.1.3.6.)

S.1.3. Indicators.

S.1.3.1. Symmetry. The index of an indicator shall be of the same shape as the graduations at least throughout that portion of its length associated with the graduations.

S.1.3.2. Length. The index of an indicator shall reach to the finest graduations with which it is used, unless the indicator and the graduations are in the same plane, in which case the distance between the end of the indicator and the ends of the graduations, measured along the line of the graduations, shall be not more than 0.04 inch.

S.1.3.3. Width. The width of the index of the indicator in relation to the series of graduations with which it is used shall be not greater than:

(a) the width of the widest graduation, and

(b) the width of the minimum clear interval between graduations.

When the index of an indicator extends along the entire length of a graduation, that portion of the index of the indicator that may be brought into coincidence with the graduation shall be of the same width throughout the length of the index that coincides with the graduation.

S.1.3.4. Clearance. The clearance between the index of an indicator and the graduations shall in no case be more than 0.06 inch.

S.1.3.5. Parallax. Parallax effects shall be reduced to the practicable minimum.

S.1.3.6. Travel of Indicator. If the most sensitive element of the primary indicating element utilizes an indicator and graduations, the relative movement of these parts corresponding to the smallest indicated value shall be no less than 0.20 inch.

S.1.4. Computing-Type Devices.

S.1.4.1. Printed Ticket. Any printed ticket issued by a device of the computing type on which there is printed the total computed price shall have printed clearly thereon also the total quantity of the delivery and the price per unit.

S.1.4.2. Money-Value Computations. Money-value computations shall be of the full-computing type in which the money value at a single unit price, or at each of a series of unit prices, shall be computed for every delivery within either the range of measurement of the device or the range of the computing elements, whichever is less.

The total price shall be computed on the basis of the quantity indicated when the value of the smallest division indicated is equal to or less than the value specified in S.1.1.3.

S.1.4.3. Money-Values, Mathematical Agreement. Any digital money-value indication and any recorded money value on a computing-type device shall be in mathematical agreement with its associated quantity indication or representation to within one cent of money value.

S.2. Design of Measuring Elements.

S.2.1. Vapor Elimination. A measuring system shall be equipped with an effective vapor eliminator or other effective means to prevent the measurement of vapor that will cause errors in excess of the applicable tolerances.

S.2.2. Reverse Flow Measurement. Effective means, automatic in operation, shall be installed to prevent reverse flow measurement.

S.2.3. Maintenance of Liquid State. A device shall be so designed that the product being measured will remain in a liquid state during passage through the device.

S.2.4. Automatic Temperature or Density Compensation. - A volumetric device shall be equipped with automatic means for adjusting the indication and registration of the measured quantity of the product to the quantity of the measurement in terms of pounds.

S.2.5. Provision for Sealing. Adequate provision shall be made for applying security seals in such a manner that no adjustment or interchange may be made of:

(a) any measurement element,

(b) any adjustable element for controlling delivery rate when such rate tends to affect the accuracy of deliveries, and

(c) any automatic temperature or density compensating system.

Any adjusting mechanism shall be readily accessible for purposes of affixing a security seal.

S.2.6. Mass Flow Meters. An automatic means to determine and correct for changes in product density shall be incorporated in any mass flow metering system that is affected by changes in the density of the product being measured.

S.3. Design of Discharge Lines and Discharge Line Valves.

S.3.1. Diversion of Measured Liquid. No means shall be provided by which any measured liquid can be diverted from the measuring chamber of the device or the discharge line therefrom, except that a manually controlled outlet that may be opened for purging or draining the measuring system shall be permitted. Effective means shall be provided to prevent the passage of liquid through any such outlet during normal operation of the device and to indicate clearly and unmistakably when the valve controls are so set as to permit passage of liquid through such outlet.

S.3.2. Discharge Hose. The discharge hose of a measuring system shall be of a wet hose type with a shutoff valve at its outlet end.

S.4. Marking Requirements.

S.4.1. Limitation of Use. If a measuring system is intended to measure accurately only liquids having particular properties, or to measure accurately only under specific installation or operating conditions, or to measure accurately only when used in conjunction with specific accessory equipment, these limitations shall be clearly and permanently marked on the device.

S.4.2. Discharge Rates. A meter shall be marked to show its designed maximum and minimum discharge rates. The marked minimum discharge rate shall not exceed 20 percent of the maximum discharge rate.

S.5. Level Condition, On-Board Weighing Systems. Provision shall be made for automatically inhibiting the delivery of liquid carbon dioxide when the vehicle is out of level beyond the limit required for the performance to be within the applicable tolerances.

4029.2. N. Notes.

N.1. Test Liquid. The test liquid shall be carbon dioxide in a compressed liquid state.

N.2. Vaporization and Volume Change. Care shall be exercised to reduce vaporization and volume changes to a minimum. When testing by weight, the weigh tank and transfer systems shall be precooled to liquid temperature prior to the start of the test to avoid the venting of vapor from the vessel being weighed.

N.3. Test Drafts.

N.3.1. Gravimetric Test. Weight test drafts shall be equal to at least the amount delivered by the device in two minutes at its maximum discharge rate.

N.3.2. Transfer Standard Test. When comparing a meter with a calibrated transfer standard, the test draft shall be equal to at least the amount delivered by the device in two minutes at its maximum discharge rate.

N.3.3. Volumetric Prover Test Drafts. Test drafts shall be equal to at least the amount delivered in one minute at normal discharge rate.

N.4. Testing Procedures.

N.4.1. Normal Tests. The "normal" test of a device shall be made at the maximum discharge flow rate developed under the conditions of installation. Any additional tests conducted at flow rates down to and including one-half of the sum of the maximum discharge flow rate and the rated minimum discharge flow rate shall be considered normal tests.

N.4.2. Special Tests. Any test except as set forth in N.4.1. shall be considered a special test. Tests shall be conducted, if possible, to evaluate any special elements or accessories attached to or associated with the device. A device shall be tested at a minimum discharge rate of:

(a) not less than the minimum rated capacity or 20 percent of the maximum rated discharge rate of the device, whichever is less, or

(b) the lowest discharge rate practicable under the conditions of installation.

"Special" tests may be conducted to develop any characteristics of the device anticipated under the conditions of installation as circumstances require.

N.4.3. Density. Temperature and pressure of the metered test liquid shall be measured during the test for the determination of density or volume correction when applicable. Table 1, contained in this Article, shall apply.

N.4.4. Automatic Temperature or Density Compensation. If a device is equipped with an automatic temperature or density compensator, the compensator shall be tested by comparing the quantity indicated or recorded by the device (with the compensator connected and operating) with the actual delivered quantity. Table 1, contained in this Article, shall apply.

4029.4. T. Tolerances.

T.1. Application.

T.1.1. To Underregistration and to Over-registration. The tolerances hereinafter prescribed shall be applied to errors of underregistration and errors of overregistration.

T.2. Tolerance Values.

T.2.1. On Normal Tests. The maintenance tolerance on "normal" tests shall be two and one-half percent (2-1/2%) of the indicated quantity. The acceptance tolerances shall be one and one-half percent (1-1/2%) of the indicated quantity.

T.2.2. On Special Tests. The maintenance and acceptance tolerance on "special" tests shall be two and one-half percent (2-1/2%) of the indicated quantity.

T.3. On Tests Using Transfer Standards. To the basic tolerance values that would otherwise be applied, there shall be added an amount equal to two times the standard deviation of the applicable transfer standard when compared to a basic reference standard.

4029.5. UR. User Requirements.

UR.1. Installation Requirements.

UR.1.1. Discharge Rate. A device shall be so installed that the actual maximum discharge rate will not exceed the rated maximum discharge rate. If necessary, means for flow regulation shall be incorporated in the installation.

UR.1.2. Length of Discharge Hose. The discharge hose shall be of such a length and design as to keep vaporization of the liquid to a minimum.

UR.1.3. Maintenance of Liquid State. A device shall be so installed and operated that the product being measured shall remain in the liquid state during passage through the meter.

UR.2. Use Requirements.

UR.2.1. Return of Indicating and Recording Elements to Zero. The primary indicating elements (visual) and the primary recording elements shall be returned to zero immediately before each delivery.

UR.2.2. Condition of Discharge System. The discharge hose, up to the valve at the end of the discharge hose, shall be completely filled and precooled to liquid temperatures before a “zero” condition is established and prior to the start of a commercial delivery. Means shall be provided to fill the discharge hose with liquid prior to the start of a delivery.

UR.2.3. Vapor Equalization Line. A vapor equalization line shall not be used during a metered delivery unless the quantity of vapor displaced from the buyer's tank to the seller’s tank is deducted from the metered quantity. Table 1, contained in this Article, shall apply.

UR.2.4. Temperature or Density Compensation.

UR.2.4.1. Use of Automatic Temperature or Density Compensators. Devices equipped with an automatic temperature or density compensator shall have the compensator connected, operable, and in use at all times. Such automatic temperature or density compensator may not be removed.

UR.2.4.2. Tickets or Invoices. Any written invoice or printed ticket based on a reading of a device that is equipped with an automatic temperature or density compensator shall have shown thereon that the quantity delivered has been temperature or density compensated.

UR.2.5. Ticket in Printing Device. A ticket shall not be inserted into a device equipped with a ticket printer until immediately before a delivery is begun, and in no case shall a ticket be in the device when the vehicle is in motion while on a public street, highway, or thoroughfare.

UR.2.6. Sale by Weight. All quantity determinations shall be made by means of an approved and sealed weighing or measuring device. All sales shall be stated in pounds.

4029.6. Definitions of Terms.

The terms defined here have a special and technical meaning when used in the Code for Carbon Dioxide Liquid-Measuring Devices.

automatic temperature or density compensation. The use of integrated or ancillary equipment to obtain, from the output of a volumetric meter, an equivalent mass indication.

carbon dioxide liquid-measuring device. A system including a mechanism or machine of (a) the meter or mass-flow type, or (b) a weighing type of device mounted on a vehicle designed to measure and deliver liquid carbon dioxide. Means may be provided to indicate automatically, for one of a series of unit prices, the total money value of the quantity measured.

large-delivery devices. Devices used primarily for single deliveries greater than 1,000 pounds or 500 kilograms.

mass flow meter. A device that measures the mass of a product flowing through the system. The mass measurement may be determined directly from the effects of mass on the sensing unit or may be inferred by measuring the properties of the product, such as the volume, density, temperature, or pressure, and displaying the quantity in mass units.

small-delivery device. Any device other than a large-delivery device.

transfer standard. A measurement system designed for use in proving and testing carbon dioxide liquid-measuring devices.

vapor equalization credit. The quantity deducted from the metered quantity of liquid carbon dioxide when a vapor equalizing line is used to facilitate the transfer of liquid during a metered delivery.

vapor equalization line. A hose or pipe connected from the vapor space of the seller's tank to the vapor space of the buyer's tank that is used to equalize the pressure during a delivery.

wet-hose type. A type of device in which it is intended that the discharge hose be completely filled prior to each commercial delivery.

TABLE 1

Temp	Pressure		Liquid Density				Vapor Density		Vap Dis
Deg F	PSIA	PSIG	lb/gal	(lb-oz)/gal			lb/cu ft	lb/gal	%
-30.00	177.89	163.19	9.127	9	-	2.0	1.989	0.266	2.9
-29.75	178.75	164.05	9.122	9	-	2.0	1.999	0.267	2.9
-29.50	179.62	164.92	9.117	9	-	1.9	2.008	0.268	2.9
-29.25	180.49	165.79	9.113	9	-	1.8	2.018	0.270	3.0
-29.00	181.36	166.67	9.108	9	-	1.7	2.028	0.271	3.0
-28.75	182.24	167.54	9.103	9	-	1.7	2.038	0.272	3.0
-28.50	183.12	168.42	9.098	9	-	1.6	2.048	0.274	3.0
-28.25	184.00	169.31	9.094	9	-	1.5	2.058	0.275	3.0
-28.00	184.89	170.19	9.089	9	-	1.4	2.067	0.276	3.0
-27.75	185.78	171.08	9.084	9	-	1.3	2.077	0.278	3.1
-27.50	186.67	171.98	9.080	9	-	1.3	2.087	0.279	3.1
-27.25	187.57	172.87	9.075	9	-	1.2	2.098	0.280	3.1
-27.00	188.47	173.77	9.070	9	-	1.1	2.108	0.282	3.1
-26.75	189.37	174.67	9.065	9	-	1.0	2.118	0.283	3.1
-26.50	190.28	175.58	9.061	9	-	1.0	2.128	0.284	3.1
-26.25	191.18	176.49	9.056	9	-	0.9	2.138	0.286	3.2
-26.00	192.10	177.40	9.051	9	-	0.8	2.148	0.287	3.2
-25.75	193.01	178.32	9.046	9	-	0.7	2.159	0.289	3.2
-25.50	193.93	179.23	9.041	9	-	0.7	2.169	0.290	3.2
-25.25	194.85	180.16	9.037	9	-	0.6	2.179	0.291	3.2
-25.00	195.78	181.08	9.032	9	-	0.5	2.190	0.293	3.2
-24.75	196.70	182.01	9.027	9	-	0.4	2.200	0.294	3.3
-24.50	197.64	182.94	9.022	9	-	0.4	2.211	0.296	3.3
-24.25	198.57	183.87	9.017	9	-	0.3	2.221	0.297	3.3
-24.00	199.51	184.81	9.013	9	-	0.2	2.232	0.298	3.3
-23.75	200.45	185.75	9.008	9	-	0.1	2.243	0.300	3.3
-23.50	201.39	186.70	9.003	9	-	0.0	2.253	0.301	3.3
-23.25	202.34	187.64	8.998	9	-	0.0	2.264	0.303	3.4
-23.00	203.29	188.60	8.993	8	-	15.9	2.275	0.304	3.4
-22.75	204.25	189.55	8.989	8	-	15.8	2.286	0.306	3.4
-22.50	205.20	190.51	8.984	8	-	15.7	2.296	0.307	3.4
-22.25	206.16	191.47	8.979	8	-	15.7	2.307	0.308	3.4
-22.00	207.13	192.43	8.974	8	-	15.6	2.318	0.310	3.5
-21.75	208.09	193.40	8.969	8	-	15.5	2.329	0.311	3.5
-21.50	209.06	194.37	8.964	8	-	15.4	2.340	0.313	3.5
-21.25	210.04	195.34	8.959	8	-	15.4	2.351	0.314	3.5
-21.00	211.02	196.32	8.955	8	-	15.3	2.362	0.316	3.5
-20.75	212.00	197.30	8.950	8	-	15.2	2.374	0.317	3.5
-20.50	212.98	198.28	8.945	8	-	15.1	2.385	0.319	3.6
-20.25	213.97	199.27	8.940	8	-	15.0	2.396	0.320	3.6

Temp	Pressure		Liquid Density		Vapor Density		Vap Dis
Deg F	PSIA	PSIG	lb/gal	(lb-oz)/gal	lb/cu ft	lb/gal	%
-20.00	214.96	200.26	8.935	8 - 15.0	2.407	0.322	3.6
-19.75	215.95	201.26	8.930	8 - 14.9	2.419	0.323	3.6
-19.50	216.95	202.25	8.925	8 - 14.8	2.430	0.325	3.6
-19.25	217.95	203.25	8.920	8 - 14.7	2.441	0.326	3.7
-19.00	218.95	204.26	8.915	8 - 14.6	2.453	0.328	3.7
-18.75	219.96	205.27	8.911	8 - 14.6	2.464	0.329	3.7
-18.50	220.97	206.28	8.906	8 - 14.5	2.476	0.331	3.7
-18.25	221.99	207.29	8.901	8 - 14.4	2.488	0.333	3.7
-18.00	223.01	208.31	8.896	8 - 14.3	2.499	0.334	3.8
-17.75	224.03	209.33	8.891	8 - 14.3	2.511	0.336	3.8
-17.50	225.05	210.36	8.886	8 - 14.2	2.523	0.337	3.8
-17.25	226.08	211.38	8.881	8 - 14.1	2.534	0.339	3.8
-17.00	227.11	212.42	8.876	8 - 14.0	2.546	0.340	3.8
-16.75	228.15	213.45	8.871	8 - 13.9	2.558	0.342	3.9
-16.50	229.18	214.49	8.866	8 - 13.9	2.570	0.344	3.9
-16.25	230.23	215.53	8.861	8 - 13.8	2.582	0.345	3.9
-16.00	231.27	216.58	8.856	8 - 13.7	2.594	0.347	3.9
-15.75	232.32	217.62	8.851	8 - 13.6	2.606	0.348	3.9
-15.50	233.37	218.68	8.846	8 - 13.5	2.618	0.350	4.0
-15.25	234.43	219.73	8.841	8 - 13.5	2.630	0.352	4.0
-15.00	235.49	220.79	8.836	8 - 13.4	2.643	0.353	4.0
-14.75	236.55	221.86	8.831	8 - 13.3	2.655	0.355	4.0
-14.50	237.62	222.92	8.826	8 - 13.2	2.667	0.357	4.0
-14.25	238.69	223.99	8.821	8 - 13.1	2.680	0.358	4.1
-14.00	239.76	225.07	8.816	8 - 13.1	2.692	0.360	4.1
-13.75	240.84	226.14	8.811	8 - 13.0	2.704	0.362	4.1
-13.50	241.92	227.22	8.806	8 - 12.9	2.717	0.363	4.1
-13.25	243.00	228.31	8.801	8 - 12.8	2.729	0.365	4.1
-13.00	244.09	229.39	8.796	8 - 12.7	2.742	0.367	4.2
-12.75	245.18	230.49	8.791	8 - 12.7	2.755	0.368	4.2
-12.50	246.28	231.58	8.786	8 - 12.6	2.767	0.370	4.2
-12.25	247.37	232.68	8.781	8 - 12.5	2.780	0.372	4.2
-12.00	248.48	233.78	8.776	8 - 12.4	2.793	0.373	4.3
-11.75	249.58	234.89	8.771	8 - 12.3	2.806	0.375	4.3
-11.50	250.69	236.00	8.765	8 - 12.2	2.819	0.377	4.3
-11.25	251.80	237.11	8.760	8 - 12.2	2.832	0.379	4.3
-11.00	252.92	238.22	8.755	8 - 12.1	2.845	0.380	4.3
-10.75	254.04	239.34	8.750	8 - 12.0	2.858	0.382	4.4
-10.50	255.16	240.47	8.745	8 - 11.9	2.871	0.384	4.4
-10.25	256.29	241.60	8.740	8 - 11.8	2.884	0.386	4.4

Carbon Dioxide LMD

Temp	Pressure		Liquid Density				Vapor Density		Vap Dis
Deg F	PSIA	PSIG	lb/gal	(lb-oz)/gal			lb/cu ft	lb/gal	%
-10.00	257.42	242.73	8.735	8	-	11.8	2.897	0.387	4.4
- 9.75	258.56	243.86	8.730	8	-	11.7	2.911	0.389	4.5
- 9.50	259.70	245.00	8.725	8	-	11.6	2.924	0.391	4.5
- 9.25	260.84	246.14	8.719	8	-	11.5	2.937	0.393	4.5
- 9.00	261.98	247.29	8.714	8	-	11.4	2.951	0.394	4.5
- 8.75	263.13	248.44	8.709	8	-	11.3	2.964	0.396	4.5
- 8.50	264.29	249.59	8.704	8	-	11.3	2.978	0.398	4.6
- 8.25	265.44	250.75	8.699	8	-	11.2	2.991	0.400	4.6
- 8.00	266.60	251.91	8.694	8	-	11.1	3.005	0.402	4.6
- 7.75	267.77	253.07	8.688	8	-	11.0	3.019	0.404	4.6
- 7.50	268.93	254.24	8.683	8	-	10.9	3.032	0.405	4.7
- 7.25	270.11	255.41	8.678	8	-	10.8	3.046	0.407	4.7
- 7.00	271.28	256.59	8.673	8	-	10.8	3.060	0.409	4.7
- 6.75	272.46	257.76	8.668	8	-	10.7	3.074	0.411	4.7
- 6.50	273.64	258.95	8.662	8	-	10.6	3.088	0.413	4.8
- 6.25	274.83	260.13	8.657	8	-	10.5	3.102	0.415	4.8
- 6.00	276.02	261.32	8.652	8	-	10.4	3.116	0.417	4.8
- 5.75	277.21	262.52	8.647	8	-	10.3	3.130	0.418	4.8
- 5.50	278.41	263.72	8.641	8	-	10.3	3.144	0.420	4.9
- 5.25	279.61	264.92	8.636	8	-	10.2	3.159	0.422	4.9
- 5.00	280.82	266.12	8.631	8	-	10.1	3.173	0.424	4.9
- 4.75	282.03	267.33	8.626	8	-	10.0	3.187	0.426	4.9
- 4.50	283.24	268.55	8.620	8	-	9.9	3.202	0.428	5.0
- 4.25	284.46	269.76	8.615	8	-	9.8	3.216	0.430	5.0
- 4.00	285.68	270.98	8.610	8	-	9.8	3.231	0.432	5.0
- 3.75	286.90	272.21	8.604	8	-	9.7	3.245	0.434	5.0
- 3.50	288.13	273.44	8.599	8	-	9.6	3.260	0.436	5.1
- 3.25	289.37	274.67	8.594	8	-	9.5	3.275	0.438	5.1
- 3.00	290.60	275.91	8.589	8	-	9.4	3.289	0.440	5.1
- 2.75	291.84	277.15	8.583	8	-	9.3	3.304	0.442	5.1
- 2.50	293.09	278.39	8.578	8	-	9.2	3.319	0.444	5.2
- 2.25	294.33	279.64	8.573	8	-	9.2	3.334	0.446	5.2
- 2.00	295.58	280.89	8.567	8	-	9.1	3.349	0.448	5.2
- 1.75	296.84	282.14	8.562	8	-	9.0	3.364	0.450	5.3
- 1.50	298.10	283.40	8.556	8	-	8.9	3.379	0.452	5.3
- 1.25	299.36	284.67	8.551	8	-	8.8	3.395	0.454	5.3
- 1.00	300.63	285.93	8.546	8	-	8.7	3.410	0.456	5.3
- 0.75	301.90	287.21	8.540	8	-	8.6	3.425	0.458	5.4
- 0.50	303.18	288.48	8.535	8	-	8.6	3.440	0.460	5.4
- 0.25	304.46	289.76	8.530	8	-	8.5	3.456	0.462	5.4

Temp	Pressure		Liquid Density		Vapor Density		Vap Dis
Deg F	PSIA	PSIG	lb/gal	(lb-oz)/gal	lb/cu ft	lb/gal	%
0.00	305.74	291.74	8.524	8 - 8.4	3.471	0.464	5.4
0.25	307.03	292.33	8.519	8 - 8.3	3.487	0.466	5.5
0.50	308.32	293.62	8.513	8 - 8.2	3.503	0.468	5.5
0.75	309.61	294.92	8.508	8 - 8.1	3.518	0.470	5.5
1.00	310.91	296.21	8.502	8 - 8.0	3.534	0.472	5.6
1.25	312.21	297.52	8.497	8 - 8.0	3.550	0.475	5.6
1.50	313.52	298.82	8.491	8 - 7.9	3.566	0.477	5.6
1.75	314.83	300.13	8.486	8 - 7.8	3.582	0.479	5.6
2.00	316.15	301.45	8.480	8 - 7.7	3.598	0.481	5.7
2.25	317.46	302.77	8.475	8 - 7.6	3.614	0.483	5.7
2.50	318.79	304.09	8.469	8 - 7.5	3.630	0.485	5.7
2.75	320.11	305.42	8.464	8 - 7.4	3.646	0.487	5.8
3.00	321.45	306.75	8.458	8 - 7.3	3.662	0.490	5.8
3.25	322.78	308.08	8.453	8 - 7.2	3.679	0.492	5.8
3.50	324.12	309.42	8.447	8 - 7.2	3.695	0.494	5.8
3.75	325.46	310.77	8.442	8 - 7.1	3.712	0.496	5.9
4.00	326.81	312.11	8.436	8 - 7.0	3.728	0.498	5.9
4.25	328.16	313.46	8.431	8 - 6.9	3.745	0.501	5.9
4.50	329.52	314.82	8.425	8 - 6.8	3.761	0.503	6.0
4.75	330.88	316.18	8.420	8 - 6.7	3.778	0.505	6.0
5.00	332.24	317.54	8.414	8 - 6.6	3.795	0.507	6.0
5.25	333.61	318.91	8.408	8 - 6.5	3.812	0.510	6.1
5.50	334.98	320.28	8.403	8 - 6.4	3.829	0.512	6.1
5.75	336.35	321.66	8.397	8 - 6.4	3.846	0.514	6.1
6.00	337.73	323.04	8.392	8 - 6.3	3.863	0.516	6.2
6.25	339.12	324.42	8.386	8 - 6.2	3.880	0.519	6.2
6.50	340.51	325.81	8.380	8 - 6.1	3.897	0.521	6.2
6.75	341.90	327.20	8.375	8 - 6.0	3.915	0.523	6.2
7.00	343.30	328.60	8.369	8 - 5.9	3.932	0.526	6.3
7.25	344.70	330.00	8.363	8 - 5.8	3.949	0.528	6.3
7.50	346.10	331.41	8.358	8 - 5.7	3.967	0.530	6.3
7.75	347.51	332.82	8.352	8 - 5.6	3.984	0.533	6.4
8.00	348.92	334.23	8.346	8 - 5.5	4.002	0.535	6.4
8.25	350.34	335.65	8.341	8 - 5.4	4.020	0.537	6.4
8.50	351.76	337.07	8.335	8 - 5.4	4.038	0.540	6.5
8.75	353.19	338.49	8.329	8 - 5.3	4.055	0.542	6.5
9.00	354.62	339.92	8.323	8 - 5.2	4.073	0.545	6.5
9.25	356.06	341.36	8.318	8 - 5.1	4.091	0.547	6.6
9.50	357.49	342.80	8.312	8 - 5.0	4.110	0.549	6.6
9.75	358.94	344.24	8.306	8 - 4.9	4.128	0.552	6.6

Carbon Dioxide LMD

Temp	Pressure		Liquid Density		Vapor Density		Vap Dis
Deg F	PSIA	PSIG	lb/gal	(lb-oz)/gal	lb/cu ft	lb/gal	%
10.00	360.38	345.69	8.300	8 - 4.8	4.146	0.554	6.7
10.25	361.84	347.14	8.295	8 - 4.7	4.164	0.557	6.7
10.50	363.29	348.60	8.289	8 - 4.6	4.183	0.559	6.7
10.75	364.75	350.06	8.283	8 - 4.5	4.201	0.562	6.8
11.00	366.22	351.52	8.277	8 - 4.4	4.220	0.564	6.8
11.25	367.68	352.99	8.271	8 - 4.3	4.238	0.567	6.8
11.50	369.16	354.46	8.266	8 - 4.2	4.257	0.569	6.9
11.75	370.64	355.94	8.260	8 - 4.2	4.276	0.572	6.9
12.00	372.12	357.42	8.254	8 - 4.1	4.295	0.574	7.0
12.25	373.60	358.91	8.248	8 - 4.0	4.314	0.577	7.0
12.50	375.09	360.40	8.242	8 - 3.9	4.333	0.579	7.0
12.75	376.59	361.89	8.236	8 - 3.8	4.352	0.582	7.1
13.00	378.09	363.39	8.230	8 - 3.7	4.371	0.584	7.1
13.25	379.59	364.89	8.224	8 - 3.6	4.390	0.587	7.1
13.50	381.10	366.40	8.219	8 - 3.5	4.410	0.589	7.2
13.75	382.61	367.91	8.213	8 - 3.4	4.429	0.592	7.2
14.00	384.13	369.43	8.207	8 - 3.3	4.449	0.595	7.2
14.25	385.65	370.95	8.201	8 - 3.2	4.468	0.597	7.3
14.50	387.17	372.48	8.195	8 - 3.1	4.488	0.600	7.3
14.75	388.70	374.01	8.189	8 - 3.0	4.508	0.603	7.4
15.00	390.24	375.54	8.183	8 - 2.9	4.527	0.605	7.4
15.25	391.78	377.08	8.177	8 - 2.8	4.547	0.608	7.4
15.50	393.32	378.62	8.171	8 - 2.7	4.567	0.611	7.5
15.75	394.87	380.17	8.165	8 - 2.6	4.587	0.613	7.5
16.00	396.42	381.72	8.159	8 - 2.5	4.608	0.616	7.5
16.25	397.98	383.28	8.153	8 - 2.4	4.628	0.619	7.6
16.50	399.54	384.84	8.147	8 - 2.3	4.648	0.621	7.6
16.75	401.10	386.41	8.141	8 - 2.2	4.669	0.624	7.7
17.00	402.67	387.98	8.134	8 - 2.2	4.689	0.627	7.7
17.25	404.25	389.55	8.128	8 - 2.1	4.710	0.630	7.7
17.50	405.82	391.13	8.122	8 - 2.0	4.731	0.632	7.8
17.75	407.41	392.71	8.116	8 - 1.9	4.751	0.635	7.8
18.00	409.00	394.30	8.110	8 - 1.8	4.772	0.638	7.9
18.25	410.59	395.89	8.104	8 - 1.7	4.793	0.641	7.9
18.50	412.19	397.49	8.098	8 - 1.6	4.814	0.644	7.9
18.75	413.79	399.09	8.092	8 - 1.5	4.835	0.646	8.0
19.00	415.39	400.70	8.085	8 - 1.4	4.857	0.649	8.0
19.25	417.00	402.31	8.079	8 - 1.3	4.878	0.652	8.1
19.50	418.62	403.92	8.073	8 - 1.2	4.900	0.655	8.1
19.75	420.24	405.54	8.067	8 - 1.1	4.921	0.658	8.2
20.00	421.86	407.17	8.061	8 - 1.0	4.943	0.661	8.2

Definitions

The specific code to which the definition applies is shown in [brackets] at the end of the definition. Definitions for the General Code [1.10] apply to all codes in Handbook 44.

A

absolute value. The absolute value of a number is the magnitude of that number without considering the positive or negative sign. [2.20]

acceptance test. The first official test of a farm milk tank, at a particular location, in which the tank is accepted as correct. This test applies to newly constructed tanks, relocated used tanks, and recalibrated tanks. [4.43]

accurate. A piece of equipment is "accurate" when its performance or value-that is, its indications, its deliveries, its recorded representations, or its capacity or actual value, etc., as determined by tests made with suitable standards-conforms to the standard within the applicable tolerances and other performance requirements. Equipment that fails so to conform is "inaccurate." (Also see "correct.") [1.10]

all-class. A description of a multi-class calibration that includes all the classes of a grain type. [5.56(a), 5.57]
(Added 2007)

analog type. A system of indication or recording in which values are presented as a series of graduations in combination with an indicator, or in which the most sensitive element of an indicating system moves continuously during the operation of the device. [1.10]

animal scale. A scale designed for weighing single heads of livestock. [2.20]
(Amended 1987)

apparent mass versus 8.0 g/cm^3. The apparent mass of an object versus 8.0 g/cm^3 is the mass of material of density 8.0 g/cm^3 that produces exactly the same balance reading as the object when the comparison is made in air with a density of 1.2 mg/cm^3 at 20 °C. [3.30, 3.32]

approval seal. A label, tag, stamped or etched impression, or the like, indicating official approval of a device. (Also see "security seal.") [1.10]

atmospheric pressure. The average atmospheric pressure agreed to exist at the meter at various ranges of elevation, irrespective of variations in atmospheric pressure from time to time. [3.33]

audit trail. An electronic count and/or information record of the changes to the values of the calibration or configuration parameters of a device. [1.10, 2.20, 3.30]
(Added 1993)

automatic bulk weighing system. A weighing system adapted to the automatic weighing of bulk commodities in successive drafts of predetermined amounts, automatically recording the no-load and loaded weight values and accumulating the net weight of each draft. [2.22]

automatic checkweigher. An automatic weighing system that does not require the intervention of an operator during the weighing process and used to subdivide items of different weights into one or more subgroups, such as identifying packages that have acceptable or unacceptable fill levels according to the value of the difference between their weight and a pre-determined set point. These systems may be used to fill standard packages for compliance with net weight requirements. [2.24]
(Added 2004)

automatic gravimetric filling machine (instrument). A filling machine or instrument that fills containers or packages with predetermined and virtually constant mass of product from bulk by automatic weighing, and which comprises essentially an automatic feeding device or devices associated with one or more weighing unit and the appropriate discharge devices. [2.24]
(Added 2004)

automatic hopper scale. One adapted to the automatic weighing of bulk commodity in successive drafts of pre-determined amounts. (This is not an "automatic-indicating scale" defined below.) [2.20]

automatic-indicating scale. One on which the weights of applied loads of various magnitudes are automatically indicated throughout all or a portion of the weighing range of the scale. (A scale that automatically weighs out commodity in predetermined drafts, such as an automatic hopper scale, a packaging scale, and the like, is not an "automatic-indicating" scale.) [2.20]

automatic temperature or density compensation. The use of integrated or ancillary equipment to obtain from the output of a volumetric meter an equivalent mass, or an equivalent liquid volume at a normal temperature of 70 °F and absolute pressure of 14.696 lb/in^2 absolute. [3.34]

automatic weighing system (AWS). An automatic weighing system is a weighing device that, in combination with other hardware and/or software components, automatically weighs discrete items and that does not require the intervention of an operator during the weighing process. Examples include, but are not limited to, weigh-labelers and checkweighers. [2.24]
(Added 2004)

automatic zero-tracking mechanism (zero-tracking mechanism). See "automatic zero-tracking mechanism" under "zero-tracking mechanism." [2.20, 2.22, 2.24]

automatic zero-setting mechanism (belt-conveyor scale). A zero setting device that operates automatically without intervention of the operator after the belt has been running empty. [2.21]
(Added 2002)

auxiliary indicator. Any indicator other than the master weight totalizer that indicates the weight of material determined by the scale. [2.21]

axle-load scale. A scale permanently installed in a fixed location, having a load-receiving element specially adapted to determine the combined load of all wheels (1) on a single axle or (2) on a tandem axle of a highway vehicle. [2.20]

B

badge. A metal plate affixed to the meter by the manufacturer showing the manufacturer's name, serial number and model number of the meter, and its rated capacity. [3.33]

balance, zero-load. See "zero-load balance." [2.20]

balance indicator. A combination of elements, one or both of which will oscillate with respect to the other, for indicating the balance condition of a nonautomatic indicating scale. The combination may consist of two indicating edges, lines, or points, or a single edge, line, or point and a graduated scale. [2.20]

balancing mechanism. A mechanism (including a balance ball) that is designed for adjusting a scale to an accurate zero-load balance condition. [2.20]

base pressure. The absolute pressure used in defining the gas measurement unit to be used, and is the gauge pressure at the meter plus an agreed atmospheric pressure. [3.33]

basic time rate. The charge for time for all intervals except the initial interval. [5.54]

basic tolerances. Basic tolerances are those tolerances on underregistration and on overregistration, or in excess and in deficiency, that are established by a particular code for a particular device under all normal tests, whether maintenance or acceptance. Basic tolerances include minimum tolerance values when these are specified. Special tolerances, identified as such and pertaining to special tests, are not basic tolerances. [1.10]

basic distance rate. The charge for distance for all intervals except the initial interval. [5.54]

batching meter. A device used for the purpose of measuring quantities of water to be used in a batching operation. [3.36]

beam scale. One on which the weights of loads of various magnitudes are indicated solely by means of one or more weighbeam bars either alone or in combination with counterpoise weights. [2.20]

beam. See "weighbeam." [2.20]

bell prover. A calibrated cylindrical metal tank of the annular type with a scale thereon that, in the downward travel in a surrounding tank containing a sealing medium, displaces air through the meter being proved or calibrated. [3.33]

belt-conveyor. An endless moving belt for transporting material from place to place. [2.21]

belt-conveyor scale. A device that employs a weighing element in contact with a belt to sense the weight of the material being conveyed and the speed (travel) of the material, and integrates these values to produce total delivered weight. [2.21]

belt-conveyor scale systems area. The scale area refers to the scale suspension, weigh idlers attached to the scale suspension, 5 approach (-) idlers, and 5 retreat (+) idlers. [2.21]
(Added 2001)

billed weight. The weight used in the computation of the freight, postal, or storage change, whether actual weight or dimensional weight. [5.58]
(Added 2004)

binary submultiples. Fractional parts obtained by successively dividing by the number 2. Thus, one-half, one fourth, one-eighth, one-sixteenth, and so on, are binary submultiples. [1.10]

built-for-purpose device. Any main device or element which was manufactured with the intent that it be used as, or part of, a weighing or measuring device or system. [1.10]
(Added 2003)

C

calibration parameter. Any adjustable parameter that can affect measurement or performance accuracy and, due to its nature, needs to be updated on an ongoing basis to maintain device accuracy, e.g., span adjustments, linearization factors, and coarse zero adjustments. [2.20, 3.30]
(Added 1993)

car-wash timer. A timer used in conjunction with a coin-operated device to measure the time during which car-wash water, cleaning solutions, or waxing solutions are dispensed. [5.55]

center-reading tank. One so designed that the gauge rod or surface gauge, when properly positioned for use, will be approximately in the vertical axis of the tank, centrally positioned with respect to the tank walls. [4.43]

cereal grain and oil seeds. Agricultural commodities including, but not limited to, corn, wheat, oats, barley, flax, rice, sorghum, soybeans, peanuts, dry beans, safflower, sunflower, fescue seed, etc. [5.56]

chart recorder. See analog or digital recorder.
(Amended 2002)

check rate. A rate of flow usually 20 percent of the capacity rate. [3.33]

checkweighing scale. One used to verify predetermined weight within prescribed limits. [2.20]

class of grain. Hard Red Winter Wheat as distinguished from Hard Red Spring Wheat as distinguished from Soft Red Winter Wheat, etc. [5.56]

clear interval between graduations. The distance between adjacent edges of successive graduations in a series of graduations. If the graduations are "staggered," the interval shall be measured, if necessary, between a graduation and an extension of the adjacent graduation. (Also see "minimum clear interval.") [1.10]

cleared. A taximeter is "cleared" when it is inoperative with respect to all fare indication, when no indication of fare or extras is shown and when all parts are in those positions in which they are designed to be when the vehicle on which the taximeter is installed is not engaged by a passenger. [5.54]

cold-tire pressure. The pressure in a tire at ambient temperature. [5.53, 5.54]

computing type or computing type device. A device designed to indicate, in addition to weight or measure, the total money value of product weighed or measured, for one of a series of unit prices. [1.10]

computing scale. One that indicates the money values of amounts of commodity weighed, at predetermined unit prices, throughout all or part of the weighing range of the scale. [2.20]

concave curve. A change in the angle of inclination of a belt conveyor where the center of the curve is above the conveyor. [2.21]

concentrated load capacity (CLC) (also referred to as Dual Tandem Axle Capacity (DTAC). A capacity rating of a vehicle or axle-load scale, specified by the manufacturer, defining the maximum load applied by a group to two axles with a centerline spaced 4 feet apart and an axle width of 8 feet for which the weighbridge is designed. The concentrated load capacity rating is for both test and use. [2.20]
(Added 1988) (Amended 1991, 1994 and 2003)

configuration parameter. Any adjustable or selectable parameter for a device feature that can affect the accuracy of a transaction or can significantly increase the potential for fraudulent use of the device and, due to its nature, needs to be updated only during device installation or upon replacement of a component, e.g., division value (increment), sensor range, and units of measurement. [2.20, 3.30]
(Added 1993)

consecutive-car test train. A train consisting of cars weighed on a reference scale, then coupled consecutively and run over the coupled-in-motion railway track scale under test. [2.20]
(Added 1990)

construction-material hopper scale. A scale adapted to weighing construction materials such as sand, gravel, cement, and hot oil. [2.20]

contract sale. A sale where a written agreement exists, prior to the point of sale, in which both buyer and seller have accepted pricing conditions of the sale. Examples include, but are not limited to: e-commerce, club sales, or pre-purchase agreements. Any devices used in the determination of quantity must comply with NIST Handbook 44. [3.30, 3.31, 3.37]
(Added 1993) (Amended 2002)

conventional scale. If the use of conversion tables is necessary to obtain a moisture content value, the moisture meter indicating scale is called "conventional scale." The values indicated by the scale are dimensionless. [5.56]

conversion table. Any table, graph, slide rule, or other external device used to determine the moisture content from the value indicated by the moisture meter. [5.56]

correction table. Any table, graph, slide rule, or other external device used to determine the moisture content from the value indicated by the moisture meter when the indicated value is altered by a parameter not automatically corrected for in the moisture meter (for example, temperature or test weight). [5.56]

convex curve. A change in the angle of inclination of a belt conveyor where the center of the curve is below the conveyor. [2.21]

conveyor stringers. Support members for the conveyor on which the scale and idlers are mounted. [2.21]

correct. A piece of equipment is "correct" when, in addition to being accurate, it meets all applicable specification requirements. Equipment that fails to meet any of the requirements for correct equipment is "incorrect." (Also see "accurate.") [1.10]

counterbalance weight. One intended for application near the butt of a weighbeam for zero-load balancing purposes. [2.20]

counterpoise weight. A slotted or "hanger" weight intended for application near the tip of the weighbeam of a scale having a multiple greater than 1. [2.20]

coupled-in-motion railroad weighing system. A device and related installation characteristics consisting of (1) the associated approach trackage, (2) the scale (i.e., the weighing element, the load-receiving element, and the indicating element with its software), and (3) the exit trackage which permit the weighing of railroad cars coupled in motion. [2.20]
(Added 1992)

crane scale. One with a nominal capacity of 5000 pounds or more designed to weigh loads while they are suspended freely from an overhead, trackmounted crane. [2.20]

cryogenic liquid-measuring device. A system including a liquid-measuring element designed to measure and deliver cryogenic liquids in the liquid state. [3.34]
(Amended 1986 and 2003)

cryogenic liquids. Fluids whose normal boiling point is below 120 kelvin (-243 °F). [3.34]

cubic foot, standard. That quantity of gas that occupies a volume of one cubic foot when under a pressure of 14.73 lb/in^2 absolute and at a temperature of 60 °F. [3.33]

cubic foot, metered. That quantity of gas that occupies one cubic foot when under pressure and temperature conditions existing in the meter. [3.33]

cubic-foot bottle. A metal bottle open at the lower end and so supported that it may be easily raised or lowered in a tank that contains a sealing medium. With the level of the sealing medium properly adjusted, the bottle, when lowered, will displace exactly one cubic foot of air upon coming to rest on the bottom of the tank. The marks on the bottle defining the cubic foot are the bottom of the lower neck and the gauge mark that partially surrounds the gauge glass in the upper neck. [3.33]

cubic foot, gas. The amount of a cryogenic liquid in the gaseous state at a temperature of 70 °F and under a pressure of 14.696 lb/in^2 absolute that occupies one cubic foot. (See NTP.) [3.34]

D

"d", dimension division value. The smallest increment that the device displays for any axis and length of object in that axis. [5.58]
(Added 2004)

D_{max} (maximum load of the measuring range). Largest value of a quantity (mass) which is applied to a load cell during test or use. This value shall not be greater than E_{max}. [2.20]
(Added 2005))

D_{min} (minimum load of the measuring range). Smallest value of a quantity (mass) which is applied to a load cell during test or use. This value shall not be less than E_{min}. [2.20]
(Added 2006)

dairy-product-test scale. A scale used in determining the moisture content of butter and/or cheese or in determining the butterfat content of milk, cream, or butter. [2.20]

decimal submultiples. Parts obtained by successively dividing by the number 10. Thus 0.1, 0.01, 0.001, and so on are decimal submultiples. [1.10]
(Added 2006)

decreasing-load test. A test for automatic-indicating scales only, wherein the performance of the scale is tested as the load is reduced. [2.20]
(Amended 1987)

deficiency. See "excess and deficiency." [1.10]

digital type. A system of indication or recording of the selector type or one that advances intermittently in which all values are presented digitally, or in numbers. In a digital indicating or recording element, or in digital representation, there are no graduations. [1.10]

dimensional weight (or dim, weight). A value computed by dividing the object's volume by a conversion factor; it may be used for the calculation of charges when the value is greater than the actual weight. [5.58]
(Added 2004)

direct sale. A sale in which both parties in the transaction are present when the quantity is being determined. An unattended automated or customer-operated weighing or measuring system is considered to represent the device/business owner in transactions involving an unattended device. [1.10]
(Amended 1993)

discharge line. A rigid pipe connected to the outlet of a measuring device. [3.30]
(Added 1987)

discharge hose. A flexible hose connected to the discharge outlet of a measuring device or its discharge line. [3.30]
(Added 1987)

discrimination (of an automatic-indicating scale). The value of the test load on the load-receiving element of the scale that will produce a specified minimum change of the indicated or recorded value on the scale. [2.20]

dispenser. See motor-fuel device. [3.30]

distributed-car test train. A train consisting of cars weighed first on a reference scale, cars coupled consecutively in groups at different locations within the train, then run over the coupled-in-motion railway track scale under test. The groups are typically placed at the front, middle, and rear of the train. [2.20]
(Added 1990)

dry-hose type. A type of device in which it is intended that the discharge hose be completely drained following the mechanical operations involved in each delivery. (See "dry hose.") [3.30, 3.34]

dry hose. A discharge hose intended to be completely drained at the end of each delivery of product. (See "dry-hose type.") [3.30, 3.31]
(Amended 2002)

dynamic monorail weighing system. A weighing system which employs hardware or software to compensate for dynamic effects from the load or the system that do not exist in a static weighing, in order to provide a stable indication. Dynamic factors may include shock or impact loading, system vibrations, oscillations, etc., and can occur even when the load is not moving across the load receiving element. [2.20]
(Added 1999)

E

E_{max} (maximum capacity). Largest value of a quantity (mass) which may be applied to a load cell without exceeding the mpe. [2.20]
(Added 2005)

e_{min} (minimum verification scale division). The smallest scale division for which a weighing element complies with the applicable requirements. [2.20, 2.21, 2.24]
(Added 1997)

E_{min} (minimum dead load). Smallest value of a quantity (mass) which may be applied to a load cell during test or use without exceeding the mpe. [2.20]
(Added 2006)

electronic link. An electronic connection between the weighing/load receiving or other sensing element and indicating element where one recognizes the other and neither can be replaced without calibration. [2.20]
(Added 2001)

element. A portion of a weighing or measuring device or system which performs a specific function and can be separated, evaluated separately, and is subject to specified full or partial error limits.
(Added 2002)

equal-arm scale. A scale having only a single lever with equal arms (that is, with a multiple of 1), equipped with two similar or dissimilar load-receiving elements (pan, plate, platter, scoop, or the like), one intended to receive material being weighed and the other intended to receive weights. There may or may not be a weighbeam. [2.20]

event counter. A nonresettable counter that increments once each time the mode that permits changes to sealable parameters is entered and one or more changes are made to sealable cali-bration or configuration parameters of a device. [2.20, 3.30]
(Added 1993)

event logger. A form of audit trail containing a series of records where each record contains the number from the event counter corresponding to the change to a sealable parameter, the identification of the parameter that was changed, the time and date when the parameter was changed, and the new value of the parameter. [2.20, 3.30]
(Added 1993)

excess and deficiency. When an instrument or device is of such a character that it has a value of its own that can be determined, its error is said to be "in excess" or "in deficiency," depending upon whether its actual value is, respectively, greater or less than its nominal value. (See "nominal.") Examples of instruments having errors "in excess" are: a linear measure that is too long; a liquid measure that is too large; and a weight that is "heavy." Examples of instruments having errors "in deficiency" are: a lubricating-oil bottle that is too small; a vehicle tank compartment that is too small; and a weight that is "light." [1.10]

extras. Charges to be paid by a passenger in addition to the fare, including any charge at a flat rate for the transportation of passengers in excess of a stated number and any charge for the transportation of baggage. [5.54]

F

face. That side of a taximeter on which passenger charges are indicated. [5.54]

face. That portion of a computing-type pump or dispenser which the actual computation of price per unit, delivered quantity, and total sale price. In the case of some electronic displays, this may not be an integral part of the pump or dispenser. [3.30]
(Added 1987)

fare. That portion of the charge for the hire of a vehicle that is automatically calculated by a taximeter through the operation of the distance and/or time mechanism. [5.54]

farm milk tank. A unit for measuring milk or other fluid dairy product, comprising a combination of (1) a stationary or portable tank, whether or not equipped with means for cooling its contents, (2) means for reading the level of liquid in the tank, such as a removable gauge rod or a surface gauge, and (3) a chart for converting level-of-liquid readings to volume; or such a unit in which readings are made on gauge rod or surface gauge directly in terms of volume. Each compartment of a subdivided tank shall, for purposes of this code, be construed to be a "farm milk tank." [4.43]

feeding mechanism. The means for depositing material to be weighed on the belt conveyor. [2.21]

fifth wheel. A commercially-available distance-measuring device which, after calibration, is recommended for use as a field transfer standard for testing the accuracy of taximeters and odometers on rented vehicles. [5.53, 5.54]

fifth-wheel test. A distance test similar to a road test, except that the distance traveled by the vehicle under test is determined by a mechanism known as a "fifth-wheel" that is attached to the vehicle and that independently measures and indicates the distance. [5.53, 5.54]

flag. A plate at the end of the lever arm or similar part by which the operating condition of a taximeter is controlled and indicated. [5.54]

fractional bar. A weighbeam bar of relatively small capacity for obtaining indications intermediate between notches or graduations on a main or tare bar. [2.20]

ft^3/h. Cubic feet per hour. [3.33]

G

gasoline gallon equivalent (GGE). Gasoline gallon equivalent (GGE) means 5.660 pounds of natural gas. [3.37]
(Added 1994)

gasoline liter equivalent (GLE). Gasoline liter equivalent (GLE) means 0.678 kilograms of natural gas. [3.37]
(Added 1994)

gauge pressure. The difference between the pressure at the meter and the atmospheric pressure (psi). [3.33]

gauge rod. A graduated, "dip-stick" type of measuring rod designed to be partially immersed in the liquid and to be read at the point where the liquid surface crosses the rod. [4.43]

gauging. The process of determining and assigning volumetric values to specific graduations on the gauge or gauge rod that serve as the basis for the tank volume chart. [4.43]

graduated interval. The distance from the center of one graduation to the center of the next graduation in a series of graduations. (Also see "value of minimum graduated interval.") [1.10]

graduation. A defining line, or one of the lines defining the subdivisions of a graduated series. The term includes such special forms as raised or indented or scored reference "lines" and special characters such as dots. (Also see "main graduation" and "subordinate graduation.") [1.10]

grain class. Different grains within the same grain type. For example, there are six classes for the grain type "wheat:" Durum Wheat, Hard Red Spring Wheat, Hard Red Winter Wheat, Soft Red Winter Wheat, Hard White Wheat, and Soft White Wheat. [5.56(a), 5.57]
(Added 2007)

grain hopper scale. One adapted to the weighing of individual loads of varying amounts of grain. [2.20]

grain moisture meter. Any device indicating either directly or through conversion tables and/or correction tables the moisture content of cereal grains and oil seeds. Also termed "moisture meter." [5.56]

grain sample. That portion of grain or seed taken from a bulk of grain or seed to be bought or sold and used to determine the moisture content of the bulk. [5.56]

grain-test scale. A scale adapted to weighing grain samples used in determining moisture content, dockage, weight per unit volume, etc. [2.20, 5.56]

grain type. See "kind of grain." [5.56(a), 5.57]
(Added 2007)

gravity discharge. A type of device designed for discharge by gravity. [3.30, 3.31
(Amended 2002)]

H

head pulley. The pulley at the discharge end of the belt conveyor. The power drive to drive the belt is generally applied to the head pulley. [2.21]

hired. A taximeter is "hired" when it is operative with respect to all applicable indications of fare or extras. The indications of fare include time and distance where applicable unless qualified by another indication of "Time Not Recording" or an equivalent expression. [5.54]

hopper scale. A scale designed for weighing bulk commodities whose load-receiving element is a tank, box, or hopper mounted on a weighing element. (Also, see "automatic hopper scale," "grain hopper scale," and "construction-material hopper scale.") [2.20]

I

idler space. The center-to-center distance between idler rollers measured parallel to the belt. [2.21]

idlers or idler rollers. Freely turning cylinders mounted on a frame to support the conveyor belt. For a flat belt, the idlers consist of one or more horizontal cylinders transverse to the direction of belt travel. For a troughed belt, the idlers consist of one or more horizontal cylinders and one or more cylinders at an angle to the horizontal to lift the sides of the belt to form a trough. [2.21]

in-service light indicator. A light used to indicate that a timing device is in operation. [5.55]

increasing-load test. The normal basic performance test for a scale in which observations are made as increments of test load are successively added to the load-receiving element of the scale. [2.20]

increment. The value of the smallest change in value that can be indicated or recorded by a digital device in normal operation. [1.10]

index of an indicator. The particular portion of an indicator that is directly utilized in making a reading. [1.10]

indicating element. An element incorporated in a weighing or measuring device by means of which its performance relative to quantity or money value is "read" from the device itself as, for example, an index-and-graduated-scale combination, a weighbeam-and-poise combination, a digital indicator, and the like. (Also see "primary indicating or recording element.") [1.10]

indicator, balance. See "balance indicator." [2.20]

initial zero-setting mechanism. Automatic means provided to set the indication to zero at the time the instrument is switched on and before it is ready for use. [2.20]
(Added 1990)

initial distance or time interval. The interval corresponding to the initial money drop. [5.54]

interval, graduated. See "graduated interval." [1.10]

interval, clear, between graduations. See "clear interval between graduations." [1.10]

J

jewelers' scale. One adapted to weighing gems and precious metals. [2.20]

K

kind of grain. Corn as distinguished from soybeans as distinguished from wheat, etc. [5.56]

L

label. A printed ticket, to be attached to a package, produced by a printer that is a part of a prepackaging scale or that is an auxiliary device. [2.20]

large-delivery device. Devices used primarily for single deliveries greater than 200 gallons, 2000 pounds, 20 000 cubic feet, 2 000 liters, or 2 000 kilograms. [3.34]

laundry-drier timer. A timer used in conjunction with a coin-operated device to measure the period of time that a laundry drier is in operation. [5.55]

liquefied petroleum gas vapor-measuring device. A system including a mechanism or device of the meter type, equipped with a totalizing index, designed to measure and deliver liquefied petroleum gas in the vapor state by definite volumes, and generally installed in a permanent location. The meters are similar in construction and operation to the conventional natural- and manufactured-gas meters. [3.32]

liquefied petroleum gas. A petroleum product composed predominantly of any of the following hydrocarbons or mixtures thereof: propane, propylene, butanes (normal butane or isobutane), and butylenes. [3.32, 3.33]

liquefied petroleum gas liquid-measuring device. A system including a mechanism or machine of the meter type designed to measure and deliver liquefied petroleum gas in the liquid state by a definite quantity, whether installed in a permanent location or mounted on a vehicle. Means may or may not be provided to indicate automatically, for one of a series of unit prices, the total money value of the liquid measured. [3.33]
(Amended 1987)

liquid volume correction factor. A correction factor used to adjust the liquid volume of a cryogenic product at the time of measurement to the liquid volume at NBP. [3.34]

liquid-fuel device. A device designed for the measurement and delivery of liquid fuels. [3.30]

liquid-measuring device. A mechanism or machine designed to measure and deliver liquid by definite volume. Means may or may not be provided to indicate automatically, for one of a series of unit prices, the total money value of the liquid measured, or to make deliveries corresponding to specific money values at a definite unit price. [3.30]

liquid fuel. Any liquid used for fuel purposes, that is, as a fuel, including motor fuel. [3.30]

livestock scale. A scale equipped with stock racks and gates and adapted to weighing livestock standing on the scale platform. [2.20]
(Amended 1989)

load-receiving element. That element of a scale that is designed to receive the load to be weighed; for example, platform, deck, rail, hopper, platter, plate, scoop. [2.20]

load cell. A device, whether electric, hydraulic, or pneumatic, that produces a signal proportional to the load applied. [2.20]

load cell verification interval (v). The load cell interval, expressed in units of mass, used in the test of the load cell for accuracy classification. [2.20, 2.21]
(Added 1996)

loading point. The location at which material to be conveyed is applied to the conveyor. [2.21]

low-flame test. A test simulating extremely low-flow rates such as caused by pilot lights. [3.33]

lubricant device. A device designed for the measurement and delivery of liquid lubricants, including, but not limited to, heavy gear lubricants and automatic transmission fluids (automotive). [3.30]

M

m^3/h. Cubic meters per hour. [3.33]

main-weighbeam elements. The combination of a main bar and its fractional bar, or a main bar alone if no fractional bar is associated with it. [2.20]

main bar. A principal weighbeam bar, usually of relatively large capacity as compared with other bars of the same weighbeam. (On an automatic-indicating scale equipped with a weighbeam, the main weighbeam bar is frequently called the "capacity bar.") [2.20]

main graduation. A graduation defining the primary or principal subdivisions of a graduated series. (Also see "graduation.") [1.10]

manual zero-setting mechanism. Nonautomatic means provided to attain a zero balance indication by the direct operation of a control. [2.20]

manufactured device. Any commercial weighing or measuring device shipped as new from the original equipment manufacturer. [1.10]
(Amended 2001)

mass flow meter. A device that measures the mass of a product flowing through the system. The mass measurement may be determined directly from the effects of mass on the sensing unit or may be inferred by measuring the properties of the product, such as the volume, density, temperature, or pressure, and displaying the quantity in mass units.
[3.30, 3.32]

master meter test method. A method of testing milk tanks that utilizes an approved master meter system for measuring test liquid removed from or introduced into the tank. [4.43]

master weight totalizer. An indicating element used with a belt conveyor scale to indicate the weight of material that was passed over the scale. The master weight totalizer is a primary indicating element of the belt-conveyor scale. [2.21]

material test. The test of a belt-conveyor scale using material (preferably that for which the device is normally used) that has been weighed to an accuracy of 0.1 percent. [2.21]
(Amended 1989)

maximum capacity. The largest load that may be accurately weighed. [2.24]
(Added 1999)

maximum cargo load. The maximum cargo load for trucks is the difference between the manufacturer's rated gross vehicle weight and the actual weight of the vehicle having no cargo load. [5.53]

measuring element. That portion of a complete multiple dimension measuring device that does not incude the indicating element. [5.58]
(Added 2004)

measurement field. A region of space or the measurement pattern produced by the measuring instrument in which objects are placed or passed through, either singly or in groups, when being measured by a single device. [5.58]
(Added 2004)

meter register. An observation index for the cumulative reading of the gas flow through the meter. In addition there are one or two proving circles in which one revolution of the test hand represents 1/2, 1, 2, 5, or 10 cubic feet, or 0.025, 0.05, 0.1, 0.2, or 0.25 cubic meter, depending on meter size. If two proving circles are present, the circle representing the smallest volume per revolution is referred to as the "leak-test circle." [3.33]

metrological integrity (of a device). The design, features, operation, installation, or use of a device that facilitates (1) the accuracy and validity of a measurement or transaction, (2) compliance of the device with weights and measures requirements, or (3) the suitability of the device for a given application. [1.10, 2.20]
(Added 1993)

minimum capacity. The smallest load that may be accurately weighed. The weighing results may be subject to excessive error if used below this value. [2.24]
(Added 1999)

minimum totalized load. The least amount of weight for which the scale is considered to be performing accurately. [2.21]

minimum tolerances. Minimum tolerances are the smallest tolerance values that can be applied to a scale. Minimum tolerances are determined on the basis of the value of the minimum graduated interval or the nominal or reading face capacity of the scale. (See also definition for basic tolerances.) [2.20]

minimum clear interval. The shortest distance between adjacent graduations when the graduations are not parallel. (Also see "clear interval.") [3.30]

minimum delivery. The least amount of weight that is to be delivered as a single weighment by a belt-conveyor scale system in normal use. [2.21]

moisture content (wet basis). The mass of water in a grain or seed sample (determined by the reference method) divided by the mass of the grain or seed sample expressed as a percentage (%). [5.56]

money-operated type. A device designed to be released for service by the insertion of money, or to be actuated by the insertion of money to make deliveries of product. [1.10]

money drop. An increment of fare indication. The "initial money drop" is the first increment of fare indication following activation of the taximeter. [5.54]

motor-fuel device or motor-fuel dispenser or retail motor- fuel device. A device designed for the measurement and delivery of liquids used as fuel for internal-combustion engines. The term "motor-fuel dispenser" means the same as "motor-fuel device"; the term "retail motor-fuel device" applies to a unique category of device (see definition of "retail device"). [3.30]

motor fuel. Liquid used as fuel for internal-combustion engines. [3.30]

multi-class. A description of a grouping of grain classes, from the grain type, in one calibration. A multi-class grain calibration may include (1) all the classes of a grain type (all-class calibration), or (2) some of the classes of a grain type within the calibration. [5.56(a), 5.57]
(Added 2007)

multi-interval scale. A scale having one weighing range which is divided into partial weighing ranges (segments), each with different scale intervals, with each partial weighing range (segment) determined automatically according to the load applied, both on increasing and decreasing loads. [2.20]
(Added 1995) (Amended 2005 and 2006)

multi-jet water meter. A water meter in which the moving element takes the form of a multiblade rotor mounted on a vertical spindle within a cylindrical measuring chamber. The liquid enters the measuring chamber through several tangential orifices around the circumference and leaves the measuring chamber through another set of tangential orifices placed at a different level in the measuring chamber. These meters register by recording the revolutions of a rotor set in motion by the force of flowing water striking the blades. [3.36]
(Added 2003)

multi-revolution scale. An automatic-indicating scale having a nominal capacity that is a multiple of the reading-face capacity and that is achieved by more than one complete revolution of the indicator. [2.20]

multiple cell application load cell. A load cell intended for use in a weighing system which incorporates more than one load cell. A multiple cell application load cell is designated with the letter "M" or the term "Multiple." (See also "single cell application load cell.") [2.20]
(Added 1999)

multiple of a scale. In general, the multiplying power of the entire system of levers or other basic weighing elements. (On a beam scale, the multiple of the scale is the number of pounds on the load-receiving element that will be counterpoised by 1 pound applied to the tip pivot of the weighbeam.) [2.20]

multiple range scale. A scale having two or more weighing ranges with different maximum capacities and different scale intervals for the same load receptor, each range extending from zero to its maximum capacity. [2.20]
(Added 1995)

multiple-tariff taximeter. One that may be set to calculate fares at any one of two or more rates. [5.54]

multiple. An integral multiple; that is, a result obtained by multiplying by a whole number. (Also see "multiple of a scale.") [1.10]

N

natural gas. A gaseous fuel, composed primarily of methane, that is suitable for compression and dispensing into a fuel storage container(s) for use as an engine fuel. [3.37]
(Added 1994)

NBP. Normal boiling point of a cryogenic liquid at 14.696 lb/in^2 absolute. [3.34]

n_{max} (maximum number of scale divisions). The maximum number of scale divisions for which a main element or load cell complies with the applicable requirements. The maximum number of scale divisions permitted for an installation is limited to the lowest n_{max} marked on the scale indicating element, weighing element, or load cell. [2.20, 2.21, 2.24]
(Added 1997)

no-load reference value. A positive weight value indication with no load in the load-receiving element (hopper) of the scale. (Used with automatic bulk-weighing systems and certain single draft, manually-operated receiving hopper scales installed below grade and used to receive grain.) [2.20]

nominal. Refers to "intended" or "named" or "stated," as opposed to "actual." For example, the "nominal" value of something is the value that it is supposed or intended to have, the value that it is claimed or stated to have, or the value by which it is commonly known. Thus, "1-pound weight," "1-gallon measure," "1-yard indication," and "500-pound scale" are statements of nominal values; corresponding actual values may be greater or lesser. (See nominal capacity of a scale.) [1.10]

nominal capacity. The nominal capacity of a scale is (a) the largest weight indication that can be obtained by the use of all of the reading or recording elements in combination, including the amount represented by any removable weights furnished or ordinarily furnished with the scale, but excluding the amount represented by any extra removable weights not ordinarily furnished with the scale, and excluding also the capacity of any auxiliary weighing attachment not contemplated by the original design of the scale, and excluding any fractional bar with a capacity less than 2-1/2 percent of the sum of the capacities of the remaining reading elements, or (b) the capacity marked on the scale by the manufacturer, whichever is less. (Also see "nominal capacity, batching scale"; "nominal capacity, hopper scale.") [2.20]

nominal capacity, batching scale. The nominal capacity of a batching scale is the capacity as marked on the scale by the scale manufacturer, or the sum of the products of the volume of each of the individual hoppers, in terms of cubic feet, times the weight per cubic foot of the heaviest material weighed in each hopper, whichever is less. [2.20]

nominal capacity, hopper scale. The nominal capacity of a hopper scale is the capacity as marked on the scale by the scale manufacturer, or the product of the volume of the hopper in bushels or cubic feet times the maximum weight per bushel or cubic foot, as the case may be, of the commodity normally weighed, whichever is less. [2.20]

non-automatic checkweigher. A weighing instrument that requires the intervention of an operator during the weighing process, used to subdivide items of different weights into one or more subgroups, such as identifying packages that have acceptable or unacceptable fill levels according to the value of the difference between their weight and a pre-determined set point. [2.24]

> **Notes:** Determining the weighing result includes any intelligent action of the operator that affects the result, such as deciding and taking an action when an indication is stable or adjusting the weight of the weighed load.
>
> Deciding that the weighing result is acceptable means making a decision regarding the acceptance of each weighing result on observing the indication or releasing a print out. The weighing process allows the operator to take an action which influences the weighing result in the case where the weighing result is not acceptable.

(Added 2004)

non-automatic weighing instrument. A weighing instrument or system that requires the intervention of an operator during the weighing process to determine the weighing result or to decide that it is acceptable. [2.20, 2.24]

> **Notes:** Determining the weighing result includes any intelligent action of the operator that affects the result, such as deciding and taking an action when an indication is stable or adjusting the weight of the weighed load.
>
> Deciding that the weighing result is acceptable means making a decision regarding the acceptance of each weighing result on observing the indication or releasing a print out. The weighing process allows the operator to take an action which influences the weighing result in the case where the weighing result is not acceptable.

(Added 2004) (Amended 2005)

nonretroactive. "Nonretroactive" requirements are enforceable after the effective date for:

1. devices manufactured within a State after the effective date;
2. both new and used devices brought into a State after the effective date; and
3. devices used in noncommercial applications which are placed into commercial use after the effective date.

Nonretroactive requirements are not enforceable with respect to devices that are in commercial service in the State as of the effective date or to new equipment in the stock of a manufacturer or a dealer in the State as of the effective date. *(Nonretroactive requirements are printed in italic type.)* [1.10]
(Amended 1989)

nose-iron. A slide-mounted, manually-adjustable pivot assembly for changing the multiple of a lever. [2.20]

notes. A section included in each of a number of codes, containing instructions, pertinent directives, and other specific information pertaining to the testing of devices. Notes are primarily directed to weights and measures officials. [1.10]

NTP density and volume correction factor. A correction factor used to adjust the liquid volume of a cryogenic product at the time of measurement to the gas equivalent at NTP. [3.34]

NTP. Normal temperature of 21 °C (70 °F) and pressure of 101.325 kPa (14.696 lb/in^2 absolute) respectively. [3.34]

O

odometer. A device that automatically indicates the total distance traveled by a vehicle. For the purpose of this code, this definition includes hub odometers, cable-driven odometers, and the distance-indicating or odometer portions of "speedometer" assemblies for automotive vehicles. [5.53]

official grain samples. Grain or seed used by the official as the official transfer standard from the reference standard method to test the accuracy and precision of grain moisture meters. [5.56]

official with statutory authority. The representative of the jurisdiction(s) responsible for certifying the accuracy of the device. [2.20, 2.21, 2.22]
(Added 1991)

operating tire pressure. The pressure in a tire immediately after a vehicle has been driven for at least 5 miles or 8 kilometers. [5.53, 5.54]

over-and-under indicator. An automatic-indicating element incorporated in or attached to a scale and comprising an indicator and a graduated scale with a central or intermediate "zero" graduation and a limited range of weight graduations on either side of the zero graduation, for indicating weights greater than and less than the predetermined values for which other elements of the scale may be set. (A scale having an over-and-under indicator is classed as an automatic-indicating scale.) [2.20]

overregistration and underregistration. When an instrument or device is of such a character that it indicates or records values as a result of its operation, its error is said to be in the direction of overregistration or underregistration, depending upon whether the indications are, respectively, greater or less than they should be. Examples of devices having errors of "overregistration" are: a fabric-measuring device that indicates more than the true length of material passed through it; and a liquid-measuring device that indicates more than the true amount of the liquid delivered by the device. Examples of devices having errors of "under-registration" are: a meter that indicates less than the true amount of product that it delivers; and a weighing scale that indicates or records less than the true weight of the applied load. [1.10]

P

parallax. The apparent displacement, or apparent difference in height or width, of a graduation or other object with respect to a fixed reference, as viewed from different points. [1.10]

parking meter. A coin-operated device for measuring parking time for vehicles. [5.55]

passenger vehicles. Vehicles such as automobiles, recreational vehicles, limousines, ambulances, and hearses. [5.53]

performance requirements. Performance requirements include all tolerance requirements and, in the case of nonautomatic-indicating scales, sensitivity requirements (SR). (See definitions for "tolerance" and "sensitivity requirement".) [1.10]

point-of-sale system. An assembly of elements including a weighing or measuring element, an indicating element, and a recording element (and may also be equipped with a "scanner") used to complete a direct sales transaction.
[2.20, 3.30, 3.32, 3.37]
(Added 1986) (Amended 1997)

poise. A movable weight mounted upon or suspended from a weighbeam bar and used in combination with graduations, and frequently with notches, on the bar to indicate weight values. (A suspended poise is commonly called a "hanging poise".) [2.20]

postal scale. A scale (usually a computing scale) designed for use to determine shipping weight or delivery charges for letters or parcels delivered by the U.S. Postal Service or private shipping companies. A weight classifier may be used as a postal scale. [2.20]
(Added 1987)

prepackaging scale. A computing scale specially designed for putting up packages of random weights in advance of sale. [2.20]

prescription scale. A scale or balance adapted to weighing the ingredients of medicinal and other formulas prescribed by physicians and others and used or intended to be used in the ordinary trade of pharmacists. [2.20]

pressure type (device). A type of device designed for operation with the liquid under artificially produced pressure. [3.30]

primary indicating or recording elements. The term "primary" is applied to those principal indicating (visual) elements and recording elements that are designed to, or may, be used by the operator in the normal commercial use of a device. The term "primary" is applied to any element or elements that may be the determining factor in arriving at the sale representation when the device is used commercially. (Examples of primary elements are the visual indicators for meters or scales not equipped with ticket printers or other

recording elements and both the visual indicators and the ticket printers or other recording elements for meters or scales so equipped.) The term "primary" is not applied to such auxiliary elements as, for example, the totalizing register or predetermined-stop mechanism on a meter or the means for producing a running record of successive weighing operations, these elements being supplementary to those that are the determining factors in sales representations of individual deliveries or weights. (See "indicating element" and "recording element".) [1.10]

prover oil. A light oil of low vapor pressure used as a sealing medium in bell provers, cubic-foot bottles, and portable cubic-foot standards. [3.33]

proving indicator. The test hand or pointer of the proving or leak-test circle on the meter register or index. [3.33]

prover method. A method of testing milk tanks that utilizes approved volumetric prover(s) for measuring the test liquid removed from or introduced into the tank. [4.43]
(Amended 2002)

R

"r" factor. A computation for determining the suitability of a vehicle scale for weighing vehicles with varying axle configurations. The factor was derived by dividing the weights in FHWA Federal Highway Bridge Gross Weight Table B by 34 000 lbs. (The resultant factors contained in Table UR.3.2.1.) [2.20]
(Added 1997)

radio frequency interference (RFI). Radio frequency interference is a type of electrical disturbance that, when introduced into electronic and electrical circuits, may cause deviations from the normally expected performance. [1.10]

random error(s). The sample standard deviation of the error (indicated values) for a number of consecutive automatic weighings of a load, or loads, passed over the load receptor, shall be expressed mathematically as: [2.24]

$$s = \sqrt{\frac{1}{n-1} \Sigma (x_i - \bar{x})^2}$$

or

$$s = \sqrt{\frac{1}{n-1} \left(\Sigma x_i^2 - \frac{(\Sigma x_i)^2}{n} \right)}$$

where:

x = error of a load indication
n = the number of loads
(Added 2004)

ranges, weight. See "weight ranges." [2.20]

rated scale capacity. That value representing the weight that can be delivered by the device in one hour. [2.21]

rated capacity. The rate of flow in cubic meters per hour of a hydrocarbon gas vapor-measuring device as recommended by the manufacturer. This rate of flow should cause a pressure drop across the meter not exceeding 1/2-inch water column. [3.33]

ratio test. A test to determine the accuracy with which the actual multiple of a scale agrees with its designed multiple. This test is used for scales employing counterpoise weights and is made with standard test weights substituted in all cases for the weights commercially used on the scale. (It is appropriate to use this test for some scales not employing counterpoise weights.) [2.20]

reading-face capacity. The largest value that may be indicated on the reading face, exclusive of the application or addition of any supplemental or accessory elements. [1.10]

reading face. That portion of an automatic-indicating weighing or measuring device that gives a visible indication of the quantity weighed or measured. A reading face may include an indicator and a series of graduations or may present values digitally, and may also provide money-value indications. [1.10, 2.20]
(Amended 2005)

recorded representation. The printed, embossed, or other representation that is recorded as a quantity by a weighing or measuring device. [1.10]

recording element. An element incorporated in a weighing or measuring device by means of which its performance relative to quantity or money value is permanently recorded on a tape, ticket, card, or the like, in the form of a printed, stamped, punched, or perforated representation. [1.10, 2.21]

recording scale. One on which the weights of applied loads may be permanently recorded on a tape, ticket, card, or the like in the form of a printed, stamped, punched, or perforated representation. [2.20]

reference weight car. A railroad car weighed on a scale for temporary use as a mass standard over a short period of time (typically, the time required to test one scale) as part of a test train.

Note: A test weight car that is representative of the types of cars typically weighed on the scale under test may be used wherever reference weight cars are specified. [2.20]
(Added 1991)

remanufactured device.

[NOT ADOPTED]

remanufactured element.

[NOT ADOPTED]

remote configuration capability. The ability to adjust a weighing or measuring device or change its sealable parameters from or through some other device that is not itself necessary to the operation of the weighing or measuring device or is not a permanent part of that device. [2.20, 3.30]
(Added 1993)

repaired devices.

[NOT ADOPTED]

repaired element.

[NOT ADOPTED]

retail device. A measuring device primarily used to measure product for the purpose of sale to the end user. [3.30, 3.32, 3.37]
(Amended 1987 and 2004)

retroactive. "Retroactive" requirements are enforceable with respect to all equipment. Retroactive requirements are printed herein in upright Roman type. (Also see "nonretroactive.") [1.10]

road test. A distance test, over a measured course, of a complete taximeter assembly when installed on a vehicle, the mechanism being actuated as a result of vehicle travel. [5.53]

rolling circumference. The rolling circumference is the straight line distance traveled per revolution of the wheel (or wheels) that actuates the taximeter or odometer. If more than one wheel actuates the taximeter or odometer, the rolling circumference is the average distance traveled per revolution of the actuating wheels. [5.53, 5.54]

S

scale division, number of (n). Quotient of the capacity divided by the value of the verification scale division: [2.20]

$$n = \frac{\text{Capacity}}{e}$$

scale division, value of (d). The value of the scale division, expressed in units of mass, is the smallest subdivision of the scale for analog indication or the difference between two consecutively indicated or printed values for digital indication or printing. (Also see "verification scale division".) [2.20]

scale section. A part of a vehicle, axle-load, livestock, or railway track scale consisting of two main load supports, usually transverse to the direction in which the load is applied. [2.20]

scale. See specific type of scale. [2.20]

seal. See "approval seal," "security seal". [1.10]

section capacity. The section capacity of a scale is the maximum live load that may be divided equally on the load pivots or load cells of a section.
(Added 2001)

section test. A shift test in which the test load is applied over individual sections of the scale. This test is conducted to disclose the weighing performance of individual sections, since scale capacity test loads are not always available and loads weighed are not always distributed evenly over all main load supports. [2.20]

security means. A method used to prevent access by other than qualified personnel, or to indicate that access has been made to certain parts of a scale that affect the performance of the device. [2.21]

security seal. A uniquely identifiable physical seal, such as a lead-and-wire seal or other type of locking seal, a pressure-sensitive seal sufficiently permanent to reveal its removal, or similar apparatus attached to a weighing or measuring device for protection against or indication of access to adjustment. (Also see "approval seal".) [1.10]
(Amended 1994)

selector-type. A system of indication or recording in which the mechanism selects, by means of a ratchet-and-pawl combination or by other means, one or the other of any two successive values that can be indicated or recorded. [1.10]

semi-automatic zero-setting mechanism. Automatic means provided to attain a direct zero balance indication requiring a single initiation by an operator. [2.20]

sensitivity requirement (SR). A performance requirement for a nonautomatic-indicating scale; specifically, the minimum change in the position of rest of the indicating element or elements of the scale in response to the increase or decrease, by a specified amount, of the test load on the load-receiving element of the scale. [2.20]

sensitivity (of a nonautomatic-indicating scale). The value of the test load on the load-receiving element of the scale that will produce a specified minimum change in the position of rest of the indicating element or elements of the scale. [2.20]

shift test. A test intended to disclose the weighing performance of a scale under off-center loading. [2.20]

side. That portion of a pump or dispenser which faces the consumer during the normal delivery of product. [3.30]
(Added 1987)

simulated-road test. A distance test during which the taximeter or odometer may be actuated by some means other than road travel. The distance traveled is either measured by a properly calibrated roller device or computed from rolling circumference and wheel-turn data. [5.53, 5.54]

simulated test. A test using artificial means of loading the scale to determine the performance of a belt-conveyor scale. [2.21]

single cell application load cell. A load cell intended for use in a weighing system which incorporates one or more load cells. A single cell application load cell is designated with the letter "S" or the term "Single." (See also "multiple cell application load cell.") [2.20]
(Added 1999)

single-tariff taximeter. One that calculates fares at a single rate only. [5.54]

skirting. Stationary side boards or sections of belt conveyor attached to the conveyor support frame or other stationary support to prevent the bulk material from falling off the side of the belt. [2.21]

slow-flow meter. A retail device designed for the measurement, at very slow rates (less than 10 gallons per hour), of liquid fuels at individual domestic installations. [3.30]

small-delivery device. Any device other than a large-delivery device. [3.34]

span (structural). The distance between adjoining sections of a scale. [2.20]
(Added 1988)

specification. A requirement usually dealing with the design, construction, or marking of a weighing or measuring device. Specifications are directed primarily to the manufacturers of devices. [1.10]

static monorail weighing system. A weighing system in which the load being applied is stationary during the weighing operation. [2.20]
(Added 1999)

strain-load test. The test of a scale beginning with the scale under load and applying known test weights to determine accuracy over a portion of the weighing range. The scale errors for a strain-load test are the errors observed for the known test loads only. The tolerances to be applied are based on the known test load used for each error that is determined.
[2.20, 2.22]

subordinate graduation. Any graduation other than a main graduation. (Also see "graduation".) [1.10]

subsequent distance or time intervals. The intervals corresponding to money drops following the initial money drop. [5.54]

substitution test. A scale testing process used to quantify the weight of material or objects for use as a known test load.
(Added 2003)

substitution test load. The sum of the combination of field standard test weights and any other applied load used in the conduct of a test using substitution test methods.
(Added 2003)

surface gauge. A combination of (1) a stationary indicator, and (2) a movable, graduated element designed to be brought into contact with the surface of the liquid from above. [4.43]

systematic (average) error $\bar{x}$. The mean value of the error (of indication) for a number of consecutive automatic weighings of a load, or loads, passed over the load-receiving element (e.g., weigh-table), shall be expressed mathematically as: [2.24]

$$\bar{x} = \frac{\sum x}{n}$$

where:

x = error of a load indication
n = the number of loads

(Added 2004)

T

tail pulley. The pulley at the opposite end of the conveyor from the head pulley. [2.21]

take-up. A device to provide sufficient tension in a conveyor belt so that the belt will be positively driven by the drive pulley. A counter-weighted take-up consists of a pulley free to move in either the vertical or horizontal direction with dead weights applied to the pulley shaft to provide the tension required. [2.21]

tare-weighbeam elements. The combination of a tare bar and its fractional bar, or a tare bar alone if no fractional bar is associated with it. [2.20]

tare mechanism. A mechanism (including a tare bar) designed for determining or balancing out the weight of packaging material, containers, vehicles, or other materials that are not intended to be included in net weight determinations. [2.20]

taximeter. A device that automatically calculates, at a predetermined rate or rates, and indicates the charge for hire of a vehicle. [5.54]

testing. An operation consisting of a series of volumetric determinations made to verify the accuracy of the volume chart that was developed by gauging. [4.43]

test chain. A device used for simulated tests consisting of a series of rollers or wheels linked together in such a manner as to assure uniformity of weight and freedom of motion to reduce wear, with consequent loss of weight, to a minimum. [2.21]

test liquid. The liquid used during the test of a device. [3.30]

test object. An object whose dimensions are verified by appropriate reference standards and intended to verify compliance of the device under test with certain metrological requirements. [5.58]
(Added 2004)

test puck. A metal, plastic, or other suitable object that remains stable for the duration of the test, used as a test load to simulate a package. Pucks can be made in a variety of dimensions and have different weights to represent a wide range of package sizes. Metal versions may be covered with rubber cushions to eliminate the possibility of damage to weighing and handling equipment. The puck mass is adjusted to an accuracy specified in N.1.2. Accuracy of Test Pucks or Packages. [2.24]
(Added 2004)

test train. A train consisting of or including reference weight cars and used to test coupled-in-motion railway track scales. The reference weight cars may be placed consecutively or distributed in different places within a train. [2.20]
(Added 1990) (Amended 1991)

test weight car. A railroad car designed to be a stable mass standard to test railway track scales. The test weight car may be one of the following types: a self-contained composite car, a self-propelled car, or a standard rail car. [2.20]
(Added 1991)

time recorder. A clock-operated mechanism designed to record the time of day. Examples of time recorders are those used in parking garages to record the "in" and "out" time of day for parked vehicles. [5.55]

timing device. A device used to measure the time during which a particular paid-for service is dispensed. Examples of timing devices are laundry driers, car-wash timers, parking meters, and parking-garage clocks and recorders. [5.55]

tolerance. A value fixing the limit of allowable error or departure from true performance or value. (See also "basic tolerances".) [1.10]

training idlers. Idlers of special design or mounting intended to shift the belt sideways on the conveyor to assure the belt is centered on the conveying idlers. [2.21]

transfer standard. A measurement system designed for use in proving and testing cryogenic liquid-measuring devices. [3.34]

tripper. A device for unloading a belt conveyor at a point between the loading point and the head pulley. [2.21]

U

uncoupled-in-motion railroad weighing system. A device and related installation characteristics consisting of (1) the associated approach trackage, (2) the scale (i.e., the weighing element, the load-receiving element, and the indicating element with its software), and (3) the exit trackage which permit the weighing of railroad cars uncoupled in motion. [2.20]
(Added 1993)

underregistration. See "overregistration" and "under-registration." [1.10]

unit price. The price at which the product is being sold and expressed in whole units of measurement. [3.30]
(Added 1992)

unit weight. One contained within the housing of an automatic-indicating scale and mechanically applied to and removed from the mechanism. The application of a unit weight will increase the range of automatic indication, normally in increments equal to the reading-face capacity. [2.20]

unit train. A unit train is defined as a number of contiguous cars carrying a single commodity from one consignor to one consignee. The number of cars is determined by agreement among the consignor, consignee, and the operating railroad. [2.20]

user requirement. A requirement dealing with the selection, installation, use, or maintenance of a weighing or measuring device. User requirements are directed primarily to the users of devices. [1.10]

usual and customary. Commonly or ordinarily found in practice or in the normal course of events and in accordance with established practices. [1.10]

V

value of minimum graduated interval. The value represented by the interval from the center of one graduation to the center of the succeeding graduation. Also, the increment between successive recorded values. (Also see "graduated interval".) [1.10]

vehicle on-board weighing system. A weighing system designed as an integral part of or attached to the frame, chassis, lifting mechanism, or bed of a vehicle, trailer, industrial truck, industrial tractor, or forklift truck. [2.20]
(Amended 1993)

vehicle scale. A scale adapted to weighing highway, farm, or other large industrial vehicles (except railroad freight cars), loaded or unloaded. [2.20]

verification scale division, value of (e). A value, expressed in units of weight (mass) and specified by the manufacturer of a device, by which the tolerance values and the accuracy class applicable to the device are determined. The verification scale division is applied to all scales, in particular to ungraduated devices since they have no graduations. The verification scale division, e, may be different from the displayed scale division, d, for certain other devices used for weight classifying or weighing in predetermined amounts, and certain other Class I and II scales. [2.20]

visible type. A type of device in which the measurement takes place in a see-through glass measuring chamber. [3.30]

v_{min} (minimum load cell verification interval). The smallest load cell verification interval, *expressed in units of mass** into which the load cell measuring range can be divided.
[2.20, 2.21, 2.24]
*[*Nonretroactive as of January 1, 2001]*
(Added 1996) (Amended 1999)

W

weighbeam. An element comprising one or more bars, equipped with movable poises or means for applying counterpoise weights or both. [2.20]

weighing element. That portion of a scale that supports the load-receiving element and transmits to the indicating element a signal or force resulting from the load applied to the load-receiving element. [2.20]
(Added 1988)

weigh-labeler. An automatic weighing system that determines the weight of a package and prints a label or other document bearing a weight declaration for each discrete item (usually a label also includes unit and total price declarations). Weigh-labelers are sometimes used to weigh and label standard and random packages (also called "Prepackaging Scales"). [2.24]
(Added 2004)

weighment. A single complete weighing operation.
[2.20, 2.21]
(Added 1986)

weight, unit. See "unit weight." [2.20]

weight classifier. A digital scale that rounds weight values up to the next scale division. These scales usually have a verification scale division, e, that is smaller than the displayed scale division. [2.20]
(Added 1987)

weight ranges. Electrical or electro-mechanical elements incorporated in an automatic indicating scale through the application of which the range of automatic indication of the scale is increased, normally in increments equal to the reading-face capacity. [2.20]

wet basis. See "moisture content (wet basis)." [5.56]

wet hose. A discharge hose intended to be full of product at all times. [See "wet-hose type".] [3.30, 3.31, 3.38]
(Amended 2002)

wet-hose type. A type of device designed to be operated with the discharge hose full of product at all times. [See "wet hose".] [3.30, 3.32, 3.34, 3.37, 3.38]
(Amended 2002)

wheel-load weighers. Compact, self-contained, portable weighing elements specially adapted to determining the wheel loads or axle loads of vehicles on highways for the enforcement of highway weight laws only. [2.20]

wholesale device. Any device other than a retail device. [See "retail device".] [3.30, 3.32]

wing pulley. A pulley made of widely spaced metal bars in order to set up a vibration to shake loose material off the underside (return side) of the belt. [2.21]

Z

zero-load balance. A correct weight indication or representation of zero when there is no load on the load-receiving element. (See also "zero-load balance for an automatic-indicating scale," "zero-load balance for a nonautomatic-indicating scale," "zero-load balance for a recording scale".) [2.20]

zero-load balance, automatic-indicating scale. A condition in which the indicator is at rest at, or oscillates through approximately equal arcs on either side of, the zero graduation. [2.20]

zero-load balance, nonautomatic-indicating scale. A condition in which (a) the weighbeam is at rest at, or oscillates through approximately equal arcs above and below, the center of a trig loop; (b) the weighbeam or lever system is at rest at, or oscillates through approximately equal arcs above and below, a horizontal position or a position midway between limiting stops; or (c) the indicator of a balance indicator is at rest at, or oscillates through approximately equal arcs on either side of, the zero graduation. [2.20]

zero-load balance for a recording scale. A condition in which the scale will record a representation of zero load. [2.20]

zero-load reference (belt-conveyor scales). A zero-load reference value represents no load on a moving conveyor belt. This value can be either; a number representing the electronic load cell output, a percentage of full scale capacity, or other reference value that accurately represents the no load condition of a moving conveyor belt. The no load reference value can only be updated after the completion of a zero load test. [2.21]
(Added 2002)

zero-setting mechanism. Means provided to attain a zero balance indication with no load on the load-receiving element. Three types of these mechanisms are: [2.20]

> **automatic zero-tracking mechanism** Automatic means provided to maintain zero balance indication, within certain limits, without the intervention of an operator. [2.20, 2.22, 2.24]
>
> **manual zero-setting mechanism.** Nonautomatic means provided to attain a zero balance indication by the direct operation of a control. [2.20]
>
> **semiautomatic zero-setting mechanism.** Automatic means provided to attain a direct zero balance indication requiring a single initiation by an operator. [2.20]

zero-setting mechanism (belt-conveyor scale). A mechanism enabling zero totalization to be obtained over a whole number of belt revolutions. [2.21, 2.23]
(Added 2002)

zero-tracking mechanism. Automatic means provided to maintain zero balance indication without the intervention of an operator. [2.20]
(Added 2005) (Amended 2006)

zone of uncertainty. The zone between adjacent increments on a digital device in which the value of either of the adjacent increments may be displayed. [2.20]

[THIS PAGE LEFT INTENTIONALLY BLANK]

Appendix A

Fundamental Considerations Associated with the Enforcement of Handbook 44 Codes

1. Uniformity of Requirements

1.1. National Conference Codes. - Weights and measures jurisdictions are urged to promulgate and adhere to the National Conference codes, to the end that uniform requirements may be in force throughout the country. This action is recommended even though a particular jurisdiction does not wholly agree with every detail of the National Conference codes. Uniformity of specifications and tolerances is an important factor in the manufacture of commercial equipment. Deviations from standard designs to meet the special demands of individual weights and measures jurisdictions are expensive, and any increase in costs of manufacture is, of course, passed on to the purchaser of equipment. On the other hand, if designs can be standardized by the manufacturer to conform to a single set of technical requirements, production costs can be kept down, to the ultimate advantage of the general public. Moreover, it seems entirely logical that equipment that is suitable for commercial use in the "specification" States should be equally suitable for such use in other States.

Another consideration supporting the recommendation for uniformity of requirements among weights and measures jurisdictions is the cumulative and regenerative effect of the widespread enforcement of a single standard of design and performance. The enforcement effort in each jurisdiction can then reinforce the enforcement effort in all other jurisdictions. More effective regulatory control can be realized with less individual effort under a system of uniform requirements than under a system in which even minor deviations from standard practice are introduced by independent State action.

Since the National Conference codes represent the majority opinion of a large and representative group of experienced regulatory officials, and since these codes are recognized by equipment manufacturers as their basic guide in the design and construction of commercial weighing and measuring equipment, the acceptance and promulgation of these codes by each State are strongly recommended.

1.2. Form of Promulgation. - A convenient and very effective form of promulgation already successfully used in a considerable number of States is promulgation by citation of National Institute of Standards and Technology Handbook 44. It is especially helpful when the citation is so made that, as amendments are adopted from time to time by the National Conference on Weights and Measures, these automatically go into effect in the State regulatory authority. For example, the following form of promulgation has been used successfully and is recommended for consideration:

> The specifications, tolerances, and other technical requirements for weighing and measuring devices as recommended by the National Conference on Weights and Measures and published in the National Institute of Standards and Technology Handbook 44, Specifications, Tolerances, and Other Technical Requirements for Weighing and Measuring Devices, and supplements thereto or revisions thereof, shall apply to commercial weighing and measuring devices in the State.

In some States it is preferred to base technical requirements upon specific action of the State legislature rather than upon an act of promulgation by a State officer. The advantages cited above may be obtained and may yet be surrounded by adequate safeguards to insure proper freedom of action by the State enforcing officer if the legislature adopts the National Conference requirements by language somewhat as follows:

> The specifications, tolerances, and other technical requirements for weighing and measuring devices as recommended by the National Conference on Weights and Measures shall be the specifications, tolerances, and other technical requirements for weighing and measuring devices of the State except insofar as specifically modified, amended, or rejected by a regulation issued by the State (insert title of enforcing officer).

2. Tolerances for Commercial Equipment

2.1. Acceptance and Maintenance Tolerances. - The official tolerances prescribed by a weights and measures jurisdiction for commercial equipment are the limits of inaccuracy officially permissible within that jurisdiction. It is recognized that errorless value or performance of mechanical equipment is unattainable. Tolerances are established, therefore, to fix the range of inaccuracy within which equipment will be officially approved for commercial use. In the case of classes of equipment on which the magnitude of the errors of value or performance may be expected to change as a result of use, two sets of tolerances are established: acceptance tolerances and maintenance tolerances.

Acceptance tolerances are applied to new or newly reconditioned or adjusted equipment, and are smaller than (usually one-half of) the maintenance tolerances. Maintenance tolerances thus provide an additional range of inaccuracy within which equipment will be approved on subsequent tests, permitting a limited amount of deterioration before the equipment will be officially rejected for inaccuracy and before reconditioning or adjustment will be required. In effect, there is assured a reasonable period of use for equipment after it is placed in service before reconditioning will be officially required. The foregoing comments do not apply, of course, when only a single set of tolerance values is established, as is the case with equipment such as glass milk bottles and graduates, which maintain their original accuracy regardless of use, and measure-containers, which are used only once.

2.2. Theory of Tolerances. - Tolerance values are so fixed that the permissible errors are sufficiently small that there is no serious injury to either the buyer or the seller of commodities, yet not so small as to make manufacturing or maintenance costs of equipment disproportionately high. Obviously, the manufacturer must know what tolerances his equipment is required to meet, so that he can manufacture economically. His equipment must be good enough to satisfy commercial needs, but should not be subject to such stringent tolerance values as to make it unreasonably costly, complicated, or delicate.

2.3. Tolerances and Adjustments. - Tolerances are primarily accuracy criteria for use by the regulatory official. However, when equipment is being adjusted for accuracy, either initially or following repair or official rejection, the objective should be to adjust as closely as practicable to zero error. Equipment owners should not take advantage of tolerances by deliberately adjusting their equipment to have a value, or to give performance, at or close to the tolerance limit. Nor should the repair or service personnel bring equipment merely within tolerance range when it is possible to adjust closer to zero error.[1]

3. Testing Apparatus

3.1. Adequacy.[2] - Tests can be made properly only if, among other things, adequate testing apparatus is available. Testing apparatus may be considered adequate only when it is properly designed for its intended use, when it is so constructed that it will retain its characteristics for a reasonable period under conditions of normal use, when it is available in denominations appropriate for a proper determination of the value or performance of the commercial equipment under test, and when it is accurately calibrated.
(Amended 2005)

3.2. Tolerances for Standards. - Except for work of relatively high precision, it is recommended that the accuracy of standards used in testing commercial weighing and measuring equipment be so established and maintained so that the use of corrections is not necessary. When the standard is used without correction, its combined error and uncertainty must be less than one-third of the applicable device tolerance.

Device testing is complicated to some degree when corrections to standards are applied. When using a correction for a standard, the uncertainty associated with the corrected value must be less than one-third of the applicable device tolerance. The reason for this requirement is to give the device being tested as nearly as practicable the full benefit of its own tolerance.
(Amended 2005)

3.3. Accuracy of Standards. - Prior to the official use of testing apparatus, its accuracy should invariably be verified. Field standards should be calibrated as often as circumstances require. By their nature, metal volumetric field standards are more susceptible to damage in handling than are standards of some other types. A field standard should be calibrated whenever damage is known or suspected to have occurred or significant repairs have been made. In addition, field standards, particularly volumetric standards, should be calibrated with sufficient frequency to affirm their continued accuracy, so that the official may always be in an unassailable position with respect to the accuracy of his testing apparatus. Secondary field standards, such as special fabric testing tapes, should be verified much more frequently than such basic standards as steel tapes or volumetric provers to demonstrate their constancy of value or performance.

Accurate and dependable results cannot be obtained with faulty or inadequate field standards. If either the service person or official is poorly equipped, their results cannot be expected to check consistently. Disagreements can be avoided and the servicing of commercial equipment can be expedited and improved if service persons and officials give equal attention to the adequacy and maintenance of their testing apparatus.
(Amended 2005)

---

[1] See General Code, Section 1.10; User Requirement G-UR.4.3.

[2] Recommendations regarding the specifications and tolerances for suitable field standards may be obtained from the Weights and Measures Division of the National Institute of Standards and Technology. Standards will meet the specifications of the National Institute of Standards and Technology Handbook 105-Series standards (or other suitable and designated standards). This section shall not preclude the use of additional field standards and/or equipment, as approved by the Director, for uniform evaluation of device performance.
(Amended 2005)

4. Inspection of Commercial Equipment

4.1. Inspection Versus Testing. - A distinction may be made between the inspection and the testing of commercial equipment that should be useful in differentiating between the two principal groups of official requirements; i.e., specifications and performance requirements. Although the term inspection is frequently loosely used to include everything that the official has to do in connection with commercial equipment, it is useful to limit the scope of that term primarily to examinations made to determine compliance with design, maintenance, and user requirements. The term testing may then be limited to those operations carried out to determine the accuracy of value or performance of the equipment under examination by comparison with the actual physical standards of the official. These two terms will be used herein in the limited senses defined.

4.2. Necessity for Inspection. - It is not enough merely to determine that the errors of equipment do not exceed the appropriate tolerances. Specification and user requirements are as important as tolerance requirements and should be enforced. Inspection is particularly important, and should be carried out with unusual thoroughness whenever the official examines a type of equipment not previously encountered.

This is the way the official learns whether or not the design and construction of the device conform to the specification requirements. But even a device of a type with which the official is thoroughly familiar and that he has previously found to meet specification requirements should not be accepted entirely on faith. Some part may have become damaged, or some detail of design may have been changed by the manufacturer, or the owner or operator may have removed an essential element or made an objectionable addition. Such conditions may be learned only by inspection. Some degree of inspection is therefore an essential part of the official examination of every piece of weighing or measuring equipment.

4.3. Specification Requirements. - A thorough knowledge by the official of the specification requirements is a prerequisite to competent inspection of equipment. The inexperienced official should have his specifications before him when making an inspection, and should check the requirements one by one against the equipment itself. Otherwise some important requirement may be overlooked. As experience is gained, the official will become progressively less dependent on the Handbook, until finally observance of faulty conditions becomes almost automatic and the time and effort required to do the inspecting are reduced to a minimum. The printed specifications, however, should always be available for reference to refresh the official's memory or to be displayed to support his decisions, and they are an essential item of his kit.

Specification requirements for a particular class of equipment are not all to be found in the separate code for that class. The requirements of the General Code apply, in general, to all classes of equipment, and these must always be considered in combination with the requirements of the appropriate separate code to arrive at the total of the requirements applicable to a piece of commercial equipment.

4.4. General Considerations. - The simpler the commercial device, the fewer are the specification requirements affecting it, and the more easily and quickly can adequate inspection be made. As mechanical complexity increases, however, inspection becomes increasingly important and more time consuming, because the opportunities for the existence of faulty conditions are multiplied. It is on the relatively complex device, too, that the official must be on the alert to discover any modification that may have been made by an operator that might adversely affect the proper functioning of the device.

It is essential for the official to familiarize himself with the design and operating characteristics of the devices that he inspects and tests. Such knowledge can be obtained from the catalogs and advertising literature of device manufacturers, from trained service persons and plant engineers, from observation of the operations performed by service persons when reconditioning equipment in the field, and from a study of the devices themselves.

Inspection should include any auxiliary equipment and general conditions external to the device that may affect its performance characteristics. In order to prolong the life of the equipment and forestall rejection, inspection should also include observation of the general maintenance of the device and of the proper functioning of all required elements. The official should look for worn or weakened mechanical parts, leaks in volumetric equipment, or elements in need of cleaning.

4.5. Misuse of Equipment. - Inspection, coupled with judicious inquiry, will sometimes disclose that equipment is being improperly used, either through ignorance of the proper method of operation or because some other method is preferred by the operator. Equipment should be operated only in the manner that is obviously indicated by its construction or that is indicated by instructions on the equipment, and operation in any other manner should be prohibited.

4.6. Recommendations. - A comprehensive knowledge of each installation will enable the official to make constructive recommendations to the equipment owner regarding proper maintenance of his weighing and measuring devices and the suitability of his equipment for the purposes for which it is being used or for which it is proposed that it be used. Such recommendations are always in order and may be very helpful

to an owner. The official will, of course, carefully avoid partiality toward or against equipment of specific makes, and will confine his recommendations to points upon which he is qualified, by knowledge and experience, to make suggestions of practical merit.

4.7. Accurate and Correct Equipment. - Finally, the weights and measures official is reminded that commercial equipment may be accurate without being correct. A piece of equipment is accurate when its performance or value (that is, its indications, its deliveries, its recorded representations, or its capacity or actual value, etc., as determined by tests made with suitable standards) conforms to the standard within the applicable tolerances and other performance requirements. Equipment that fails so to conform is inaccurate. A piece of equipment is correct when in addition to being accurate, it meets all applicable specification requirements. Equipment that fails to meet any of the requirements for correct equipment is incorrect. Only equipment that is correct should be sealed and approved for commercial use.[3]

5. Correction of Commercial Equipment

5.1. Adjustable Elements. - Many types of weighing and measuring instruments are not susceptible of adjustment for accuracy by means of adjustable elements. Linear measures, liquid measures, graduates, measure-containers, milk and lubricating-oil bottles, farm milk tanks, dry measures, and some of the more simple types of scales are in this category. Other types (for example, taximeters and odometers and some metering devices) may be adjusted in the field, but only by changing certain parts such as gears in gear trains.

Some types, of which fabric-measuring devices and cordage-measuring devices are examples, are not intended to be adjusted in the field and require reconditioning in shop or factory if inaccurate. Liquid-measuring devices and most scales are equipped with adjustable elements, and some vehicle-tank compartments have adjustable indicators. Field adjustments may readily be made on such equipment. In the discussion that follows, the principles pointed out and the recommendations made apply to adjustments on any commercial equipment, by whatever means accomplished.

5.2. When Corrections Should be Made. - One of the primary duties of a weights and measures official is to determine whether equipment is suitable for commercial use. If device conforms to all legal requirements, the official "marks" or "seals" it to indicate approval. If it does not conform to all official requirements, the official is required to take action to ensure that the device is corrected within a reasonable period of time. Devices with performance errors that could result in serious economic injury to either party in a transaction should be prohibited from use immediately and not allowed to be returned to service until necessary corrections have been made. The official should consider the most appropriate action, based on all available information and economic factors.

Some officials contend that it is justifiable for the official to make minor corrections and adjustments if there is no service agency nearby or if the owner or operator depends on this single device and would be "out of business" if the use of the device were prohibited until repairs could be made.

Before adjustments are made at the request of the owner or the owner's representative, the official should be confident that the problem is not due to faulty installation or a defective part, and that the adjustment will correct the problem. The official should never undertake major repairs, or even minor corrections, if services of commercial agencies are readily available. The official should always be mindful of conflicts of interest before attempting to perform any services other than normal device examination and testing duties.
(Amended 1995)

5.3. Gauging. - In the majority of cases, when the weights and measures official tests commercial equipment, he is verifying the accuracy of a value or the accuracy of the performance as previously established either by himself or by someone else. There are times, however, when the test of the official is the initial test on the basis of which the calibration of the device is first determined or its performance first established. The most common example of such gauging is in connection with vehicle tanks the compartments of which are used as measures. Frequently the official makes the first determination on the capacities of the compartments of a vehicle tank, and his test results are used to determine the proper settings of the compartment indicators for the exact compartment capacities desired. Adjustments of the position of an indicator under these circumstances are clearly not the kind of adjustments discussed in the preceding paragraph.

6. Rejection of Commercial Equipment

6.1. Rejection and Condemnation. - The uniform Weights and Measures Law contains a provision stating that the director shall reject and order to be corrected such physical weights and measures or devices found to be incorrect. Weights and measures and devices that have been rejected may be seized if not corrected within a reasonable time or if used or disposed of in a manner not specifically authorized. The director shall remove from service and may seize weights and measures found to be incorrect that are not capable of being made correct.

[3] See Sec. 1.10; General Code and Appendix D. Definitions.

These broad powers should be used by the official with discretion. The director should always keep in mind the property rights of an equipment owner, and cooperate in working out arrangements whereby an owner can realize at least something from equipment that has been rejected. In cases of doubt, the official should initially reject rather than condemn outright. Destruction and confiscation of equipment are harsh procedures. Power to seize and destroy is necessary for adequate control of extreme situations, but seizure and destruction should be resorted to only when clearly justified.

On the other hand, rejection is clearly inappropriate for many items of measuring equipment. This is true for most linear measures, many liquid and dry measures, and graduates, measure-containers, milk bottles, lubricating-oil bottles, and some scales. When such equipment is "incorrect," it is either impractical or impossible to adjust or repair it, and the official has no alternative to outright condemnation. When only a few such items are involved, immediate destruction or confiscation is probably the best procedure. If a considerable number of items are involved (as, for example, a stock of measures in the hands of a dealer or a large shipment of bottles), return of these to the manufacturer for credit or replacement should ordinarily be permitted provided that the official is assured that they will not get into commercial use. In rare instances, confiscation and destruction are justified as a method of control when less harsh methods have failed.

In the case of incorrect mechanisms such as fabric-measuring devices, taximeters, liquid-measuring devices, and most scales, repair of the equipment is usually possible, so rejection is the customary procedure. Seizure may occasionally be justified, but in the large majority of instances this should be unnecessary. Even in the case of worn-out equipment, some salvage is usually possible, and this should be permitted under proper controls.
(Amended 1995)

7. Tagging of Equipment

7.1. Rejected and Condemned. – It will ordinarily be practicable to tag or mark as rejected each item of equipment found to be incorrect and considered susceptible of proper reconditioning. However, it can be considered justifiable not to mark as rejected incorrect devices capable of meeting acceptable performance requirements if they are to be allowed to remain in service for a reasonable time until minor problems are corrected since marks of rejection may tend to be misleading about a device's ability to produce accurate measurements during the correction period. The tagging of equipment as condemned, or with a similar label to indicate that it is permanently out of service, is not recommended if there is any other way in which the equipment can definitely be put out of service. Equipment that cannot successfully be repaired should be dismantled, removed from the premises, or confiscated by the official rather than merely being tagged as "condemned."
(Amended 1995)

7.2. Nonsealed and Noncommercial. - Rejection is not appropriate if measuring equipment cannot be tested by the official at the time of his regular visit-for example, when there is no gasoline in the supply tank of a gasoline- dispensing device. Some officials affix to such equipment a nonsealed tag stating that the device has not been tested and sealed and that it must not be used commercially until it has been officially tested and approved. This is recommended whenever considerable time will elapse before the device can be tested.

Where the official finds in the same establishment equipment that is in commercial use and also equipment suitable for commercial use that is not presently in service, but which may be put into service at some future time, he may treat the latter equipment in any of the following ways:

a. Test and approve the same as commercial equipment in use.

b. Refrain from testing it and remove it from the premises to preclude its use for commercial purposes.

c. Mark the equipment nonsealed.

Where the official finds commercial equipment and noncommercial equipment installed or used in close proximity, he may treat the noncommercial equipment in any of the following ways:

a. Test and approve the same as commercial equipment.

b. Physically separate the two groups of equipment so that misuse of the noncommercial equipment will be prevented.

c. Tag it to show that it has not been officially tested and is not to be used commercially.

8. Records of Equipment

8.1. The official will be well advised to keep careful records of equipment that is rejected, so that he may follow up to insure that the necessary repairs have been made. As soon as practicable following completion of repairs, the equipment should be retested. Complete records should also be kept of equipment that has been tagged as nonsealed or noncommercial. Such records may be invaluable should it subsequently become necessary to take disciplinary steps because of improper use of such equipment.

9. Sealing of Equipment

9.1. Types of Seals and Their Locations. - Most weights and measures jurisdictions require that all equipment officially approved for commercial use (with certain exceptions to be pointed out later) be suitably marked or sealed to show approval. This is done primarily for the benefit of the public to show that such equipment has been officially examined and approved. The seal of approval should be as conspicuous as circumstances permit and should be of such a character and so applied that it will be reasonably permanent. Uniformity of position of the seal on similar types of equipment is also desirable as a further aid to the public.

The official will need more than one form of seal to meet the requirements of different kinds of equipment. Good quality, weather-resistant, water-adhesive, or pressure-sensitive seals or decalcomania seals are recommended for fabric-measuring devices, liquid-measuring devices, taximeters, and most scales, because of their permanence and good appearance. Steel stamps are most suitable for liquid and dry measures, for some types of linear measures, and for weights. An etched seal, applied with suitable etching ink, is excellent for steel tapes, and greatly preferable to a seal applied with a steel stamp. The only practicable seal for a graduate is one marked with a diamond or carbide pencil, or one etched with glass-marking ink. For a vehicle tank, the official may wish to devise a relatively large seal, perhaps of metal, with provision for stamping data relative to compartment capacities, the whole to be welded or otherwise permanently attached to the shell of the tank. In general, the lead-and-wire seal is not suitable as an approval seal.

9.2. Exceptions. - Commercial equipment such as measure-containers, milk bottles, and lubricating-oil bottles are not tested individually because of the time element involved. Because manufacturing processes for these items are closely controlled, an essentially uniform product is produced by each manufacturer. The official normally tests samples of these items prior to their sale within his jurisdiction and subsequently makes spot checks by testing samples selected at random from new stocks.

Another exception to the general rule for sealing approved equipment is found in certain very small weights whose size precludes satisfactory stamping with a steel die.

10. Rounding Off Numerical Values

10.1. Definition. - To round off or round a numerical value is to change the value of recorded digits to some other value considered more desirable for the purpose at hand by dropping or changing certain figures. For example, if a computed, observed, or accumulated value is 4738, this can be rounded off to the nearest thousand, hundred, or ten, as desired. Such rounded-off values would be, respectively, 5000, 4700, 4740. Similarly, a value such as 47.382 can be rounded off to two decimal places, to one decimal place, or to the units place. The rounded-off figures in this example would be, respectively, 47.38, 47.4, 47.

10.2. General Rules. - The general rules for rounding off may be stated briefly as follows:

a. When the figure next beyond the last figure or place to be retained is less than 5, the figure in the last place retained is to be kept unchanged. When rounding off 4738 to the nearest hundred, it is noted that the figure 3 (next beyond the last figure to be retained) is less than 5. Thus the rounded-off value would be 4700. Likewise, 47.382 rounded to two decimal places becomes 47.38.

b. When the figure next beyond the last figure or place to be retained is greater than 5, the figure in the last place retained is to be increased by 1. When rounding off 4738 to the nearest thousand, it is noted that the figure 7 (next beyond the last figure to be retained) is greater than 5. Thus the rounded-off value would be 5000. Likewise, 47.382 rounded to one decimal place becomes 47.4.

c. When the figure next beyond the last figure to be retained is 5 followed by any figures other than zero(s), treat as in (b) above; that is, the figure in the last place retained is to be increased by 1. When rounding off 4501 to the nearest thousand, 1 is added to the thousands figure and the result becomes 5000.

d. When the figure next beyond the last figure to be retained is 5 and there are no figures, or only zeros, beyond this 5, the figure in the last place to be retained is to be left unchanged if it is even (0, 2, 4, 6, or 8) and is to be increased by 1 if it is odd (1, 3, 5, 7, or 9). This is the odd and even rule, and may be stated as follows: "If odd, then add." Thus, rounding off to the first decimal place, 47.25 would become 47.2 and 47.15 would become 47.2. Also, rounded to the nearest thousand, 4500 would become 4000 and 1500 would become 2000.

It is important to remember that, when there are two or more figures to the right of the place where the last significant figure of the final result is to be, the entire series of such figures must be rounded off in one step and not in two or more successive rounding steps. [Expressed differently, when two or more such figures are involved, these are not to be rounded off individually, but are to be rounded off as a group.] Thus, when rounding off 47.3499 to the first decimal place, the result becomes 47.3. In arriving at this result, the figures "499" are

treated as a group. Since the 4 next beyond the last figure to be retained is less than 5, the "499" is dropped (see subparagraph (a) above). It would be incorrect to round off these figures successively to the left so that 47.3499 would become 47.350 and then 47.35 and then 47.4.

10.3. Rules for Reading of Indications. - An important aspect of rounding off values is the application of these rules to the reading of indications of an indicator-and-graduated-scale combination (where the majority of the indications may be expected to lie somewhere between two graduations) if it is desired to read or record values only to the nearest graduation. Consider a vertical graduated scale and an indicator. Obviously, if the indicator is between two graduations but is closer to one graduation than it is to the other adjacent graduation, the value of the closer graduation is the one to be read or recorded.

In the case where, as nearly as can be determined, the indicator is midway between two graduations, the odd-and-even rule is invoked, and the value to be read or recorded is that of the graduation whose value is even. For example, if the indicator lies exactly midway between two graduations having values of 471 and 472, respectively, the indication should be read or recorded as 472, this being an even value. If midway between graduations having values of 474 and 475, the even value 474 should be read or recorded. Similarly, if the two graduations involved had values of 470 and 475, the even value of 470 should be read or recorded.

A special case not covered by the foregoing paragraph is that of a graduated scale in which successive graduations are numbered by two's, all graduations thus having even values; for example, 470, 472, 474, etc. When, in this case, an indication lies midway between two graduations, the recommended procedure is to depart from the practice of reading or recording only to the value of the nearest graduation and to read or record the intermediate odd value. For example, an indication midway between 470 and 472 should be read as 471.

10.4. Rules for Common Fractions. - When applying the rounding-off rules to common fractions, the principles are to be applied to the numerators of the fractions that have, if necessary, been reduced to a common denominator. The principle of "5s" is changed to the one-half principle; that is, add if more than one-half, drop if less than one-half, and apply the odd-and even rule if exactly one-half.

For example, a series of values might be 1-1/32, 1-2/32, 1-3/32, 1-4/32, 1-5/32, 1-6/32, 1-7/32, 1-8/32, 1-9/32. Assume that these values are to be rounded off to the nearest eighth (4/32). Then,

1-1/32 becomes 1. (1/32 is less than half of 4/32 and accordingly is dropped.)

1-2/32 becomes 1. (2/32 is exactly one-half of 4/32; it is dropped because it is round (down) to the "even" eighth, which in this instance is 0/8.)

1-3/32 becomes 1-4/32 or 1-1/8. (3/32 is more than half of 4/32, and accordingly is rounded "up" to 4/32 or 1/8.)

1-4/32 remains unchanged, being an exact eighth (1-1/8.)

1-5/32 becomes 1-4/32 or 1-1/8. (5/32 is 1/32 more than an exact 1/8; 1/32 is less than half of 4/32 and accordingly is dropped.)

1-6/32 becomes 1-2/8 or 1-1/4. (6/32 is 2/32 more than an exact 1/8; 2/32 is exactly one-half of 4/32, and the final fraction is rounded (up) to the "even" eighth, which in this instance is 2/8.)

1-7/32 becomes 1-2/8 or 1-1/4. (7/32 is 3/32 more than an exact 1/8; 3/32 is more than one-half of 4/32 and accordingly the final fraction is rounded (up) to 2/8 or 1/4.)

1-8/32 remains unchanged, being an exact eighth (1-2/8 or 1-1/4).

1-9/32 becomes 1-2/8 or 1-1/4. (9/32 is 1/32 more than an exact 1/8; 1/32 is less than half of 4/32 and accordingly is dropped.)

[THIS PAGE LEFT INTENTIONALLY BLANK]

Appendix B

Units and Systems of Measurement
Their Origin, Development, and Present Status

1. Introduction

The National Institute of Standards and Technology (NIST) (formerly the National Bureau of Standards) was established by act of Congress in 1901 to serve as a national scientific laboratory in the physical sciences and to provide fundamental measurement standards for science and industry. In carrying out these related functions the Institute conducts research and development in many fields of physics, mathematics, chemistry, and engineering. At the time of its founding, the Institute had custody of two primary standards-the meter bar for length and the kilogram cylinder for mass. With the phenomenal growth of science and technology over the past half century, the Institute has become a major research institution concerned not only with everyday weights and measures, but also with hundreds of other scientific and engineering standards that are necessary to the industrial progress of the Nation. Nevertheless, the country still looks to NIST for information on the units of measurement, particularly their definitions and equivalents.

The subject of measurement systems and units can be treated from several different standpoints. Scientists and engineers are interested in the methods by which precision measurements are made; State weights and measures officials are concerned with laws and regulations that assure equity in the marketplace and protect public health and safety and with methods for verifying commercial weighing and measuring devices. But a vastly larger group of people is interested in some general knowledge of the origin and development of measurement systems, of the present status of units and standards, and of miscellaneous facts that will be useful in everyday life. This material has been prepared to supply that information on measurement systems and units that experience has shown to be the common subject of inquiry.

2. Units and Systems of Measurement

The expression “weights and measures” is often used to refer to measurements of length, mass, and capacity or volume, thus excluding such quantities as electrical and time measurements and thermometry. This section on units and measurement systems presents some fundamental information to clarify the concepts of this subject and to eliminate erroneous and misleading use of terms.

It is essential that the distinction between the terms “units” and “standards” be established and kept in mind.

A unit is a special quantity in terms of which other quantities are expressed. In general, a unit is fixed by definition and is independent of such physical conditions as temperature. Examples: the meter, the liter, the gram, the yard, the pound, the gallon.

A standard is a physical realization or representation of a unit. In general, it is not entirely independent of physical conditions, and it is a representation of the unit only under specified conditions. For example, a meter standard has a length of 1 meter when at some definite temperature and supported in a certain manner. If supported in a different manner, it might have to be at a different temperature in order to have a length of 1 meter.

2.1. Origin and Early History of Units and Standards.

2.1.1. General Survey of Early History of Measurement Systems . - Weights and measures were among the earliest tools invented by man. Primitive societies needed rudimentary measures for many tasks: constructing dwellings of an appropriate size and shape, fashioning clothing, or bartering food or raw materials.

Man understandably turned first to parts of the body and the natural surroundings for measuring instruments. Early Babylonian and Egyptian records and the Bible indicate that length was first measured with the forearm, hand, or finger and that time was measured by the periods of the sun, moon, and other heavenly bodies. When it was necessary to compare the capacities of containers such as gourds or clay or metal vessels, they were filled with plant seeds which were then counted to measure the volumes. When means for weighing were invented, seeds and stones served as standards. For instance, the “carat,” still used as a unit for gems, was derived from the carob seed.

Our present knowledge of early weights and measures comes from many sources. Some rather early standards have been recovered by archaeologists and preserved in museums. The comparison of the dimensions of buildings with the descriptions of contemporary writers is another source of information. An interesting example of this is the comparison of the dimensions of the Greek Parthenon with the description given by Plutarch from which a fairly accurate idea of the size of the Attic foot is obtained. In some cases, we have only plausible theories and we must sometimes decide on the interpretation to be given to the evidence.

For example, does the fact that the length of the double-cubit of early Babylonia was equal (within two parts per thousand) to the length of the seconds pendulum at Babylon indicate a scientific knowledge of the pendulum at a very early date, or do we merely have a curious coincidence? By studying the evidence given by all available sources, and by correlating the relevant facts, we obtain some idea of the origin and development of the units. We find that they have changed more or less gradually with the passing of time in a complex manner because of a great variety of modifying influences. We find the units modified and grouped into measurement systems: The Babylonian system, the Egyptian system, the Phileterian system of the Ptolemaic age, the Olympic system of Greece, the Roman system, and the British system, to mention only a few.

2.1.2. Origin and Development of Some Common Customary Units. - The origin and development of units of measurement has been investigated in considerable detail and a number of books have been written on the subject. It is only possible to give here somewhat sketchily the story about a few units.

Units of length: The cubit was the first recorded unit used by ancient peoples to measure length. There were several cubits of different magnitudes that were used. The common cubit was the length of the forearm from the elbow to the tip of the middle finger. It was divided into the span of the hand (one-half cubit), the palm or width of the hand (one sixth), and the digit or width of a finger (one twenty-fourth). The Royal or Sacred Cubit, which was 7 palms or 28 digits long, was used in constructing buildings and monuments and in surveying. The inch, foot, and yard evolved from these units through a complicated transformation not yet fully understood. Some believe they evolved from cubic measures; others believe they were simple proportions or multiples of the cubit. In any case, the foot was inherited from the Egyptians by the Greeks and Romans. The Roman foot was divided into both 12 unciae (inches) and 16 digits. The Romans also introduced the mile of 1000 paces or double steps, the pace being equal to 5 Roman feet. The Roman mile of 5000 feet was introduced into England during the occupation. Queen Elizabeth, who reigned from 1558 to 1603, changed, by statute, the mile to 5280 feet or 8 furlongs, a furlong being 40 rods of 5-1/2 yards each.

The introduction of the use of the yard as a unit of length came later, but its origin is not definitely known. Some believe the origin is the double cubit, others believe that it originated from cubic measure. Regardless of its origin, the early yard was divided by the binary system into 2, 4, 8, and 16 parts called the half-yard, span, finger, and nail. The association of the yard with the “gird” or circumference of a person's waist or with the distance from the tip of the nose to the end of the thumb of Henry I are probably standardizing actions, since several yards were in use in Great Britain.

The point, which is a unit for measuring print type, is recent. It originated with Pierre Simon Fournier in 1737. It was modified and developed by the Didot brothers, Francois Ambroise and Pierre Francois, in 1755. The point was first used in the United States in 1878 by a Chicago type foundry (Marder, Luse, and Company). Since 1886, a point has been exactly 0.3514598 millimeters, or about 1/72 inch.

Units of mass: The grain was the earliest unit of mass and is the smallest unit in the apothecary, avoirdupois, Tower, and Troy systems. The early unit was a grain of wheat or barleycorn used to weigh the precious metals silver and gold. Larger units preserved in stone standards were developed that were used as both units of mass and of monetary currency. The pound was derived from the mina used by ancient civilizations. A smaller unit was the shekel, and a larger unit was the talent. The magnitude of these units varied from place to place. The Babylonians and Sumerians had a system in which there were 60 shekels in a mina and 60 minas in a talent. The Roman talent consisted of 100 libra (pound) which were smaller in magnitude than the mina. The Troy pound used in England and the United States for monetary purposes, like the Roman pound, was divided into 12 ounces, but the Roman uncia (ounce) was smaller. The carat is a unit for measuring gemstones that had its origin in the carob seed, which later was standardized at 1/144 ounce and then 0.2 gram.

Goods of commerce were originally traded by number or volume. When weighing of goods began, units of mass based on a volume of grain or water were developed. For example, the talent in some places was approximately equal to the mass of one cubic foot of water. Was this a coincidence or by design? The diverse magnitudes of units having the same name, which still appear today in our dry and liquid measures, could have arisen from the various commodities traded. The larger avoirdupois pound for goods of commerce might have been based on volume of water which has a higher bulk density than grain. For example, the Egyptian hon was a volume unit about 11 percent larger than a cubic palm and corresponded to one mina of water. It was almost identical in volume to the present U.S. pint.

The stone, quarter, hundredweight, and ton are larger units of mass still used in Great Britain. The present stone is 14 pounds, but an earlier unit appears to have been 16 pounds. The other units are multiples of 2, 8, and 160 times the stone, or 28 112, and 2240 pounds. The hundred-weight is approximately equal to 2 talents. In the United States the ton of 2240 pounds is known as the long ton. The short ton is equal to 2000 pounds.

Units of time and angle: The division of the circle into 360 degrees and the day into hours, minutes, and seconds can be traced to the Babylonians who had a sexagesimal system of numbers. The 360 degrees may have been related to a year of 360 days.

2.2. The Metric System.

2.2.1. Definition, Origin, and Development. - Metric systems of units have evolved since the adoption of the first well defined system in France in 1791. During this evolution the use of these systems spread throughout the world, first to the non-English speaking countries, and more recently to the English speaking countries. The first metric system was based on the centimeter, gram, and second (cgs) and these units were particularly convenient in science and technology. Later metric systems were based on the meter, kilogram, and second (mks) to improve the value of the units for practical applications. The present metric system is the International System (SI) of units; it is also based on the meter, kilogram and second as well as additional base units for temperature, electricity, radiation, and the quantity of substance that enters into chemical reactions. The International System of units is often called the modernized metric system.

The adoption of the system in France was slow, but its desirability as an international system was recognized by geodesists and others. On May 20, 1875, an international treaty known as the International Metric Convention or the Treaty of the Meter was signed by 17 countries including the United States. This treaty established the following organizations to conduct international activities relating to a uniform system for measurements:

1) The General Conference on Weights and Measures (French initials: CGPM), an intergovernmental conference of official delegates of member nations and the supreme authority for all actions;

2) The International Committee of Weights and Measures (French initials: CIPM), consisting of selected scientists and metrologists, which prepares and executes the decisions of the CGPM and is responsible for the supervision of the International Bureau of Weights and Measures;

3) The International Bureau of Weights and Measures (French initials: BIPM), a permanent laboratory and world center of scientific metrology, the activities of which include the establishment of the basic standards and scales of the principal physical quantities and maintenance of the international prototype standards.

The National Institute of Standards and Technology provides official United States representation in these organizations. The CGPM, the CIPM, and the BIPM have been major factors in the continuing refinement of the metric system on a scientific basis and in the evolution of the International System of Units.

Multiples and submultiples of metric units are related by powers of ten. This relationship is compatible with the decimal system of numbers and it contributes greatly to the convenience of metric units.

2.2.2. International System of Units. - At the end of World War II, a number of different systems of measurement still existed throughout the world. Some of these systems were variations of the metric system, and others were based on the customary inch-pound system of the English-speaking countries. It was recognized that additional steps were needed to promote a worldwide measurement system. As a result, in 1948, the 9th General Conference on Weights and Measures asked the International Committee of Weights and Measures to conduct an international study of the measurement needs of the scientific, technical, and educational communities. On the basis of the findings of this study, the 10th General Conference in 1954 decided that an international system should be derived from six base units in order to provide for the measurement of temperature and optical radiation in addition to mechanical and electromagnetic quantities. The six base units recommended were the meter, kilogram, second, ampere, Kelvin degree (which later was renamed the kelvin), and the candela.

In 1960, the 11th General Conference of Weights and Measures named the system based on the six base quantities the International System of Units. The generally adopted abbreviation, SI, is taken from the French name: Le Système International D'Unités. The SI metric system is now either obligatory or permissible throughout the world.

2.2.3. Units and Standards of the Metric System. - In the early metric system there were two fundamental or base units, the meter and the kilogram, for length and mass. The other units of length and mass, as well as all units of area, volume, and compound units such as density were derived from these two fundamental units.

The meter was originally intended to be 1 ten-millionth part of a meridional quadrant of the earth. The Meter of the Archives, the platinum length standard which was the standard for most of the 19th century, at first was supposed to be exactly this fractional part of the quadrant. More refined measurements over the earth's surface showed that this supposition was not correct. In 1889, a new international

metric standard of length, the International Prototype Meter, a graduated line standard of platinum-iridium, was selected from a group of bars because it was found by precise measurements to have the same length as the Meter of the Archives. The meter was then defined as the distance under specified conditions between the lines on the International Prototype Meter without reference to any measurements of the earth or to the Meter of the Archives, which it superseded. Advances in science and technology have made it possible to improve the definition of the meter and reduce the uncertainties associated with artifacts. From 1960 to 1983, the meter was defined as the length equal to 1 650 763.73 wave-lengths in vacuum of the radiation corresponding to the transition between the specified energy levels of the krypton 86 atom. Since 1983 the meter has been defined as the length of the path traveled by light in a vacuum during a time interval of 1/299 792 458 of a second.

The kilogram, previously defined as the mass of one cubic decimeter of water at the temperature of maximum density, was known as the Kilogram of the Archives. It was replaced after the International Metric Convention in 1875 by the International Prototype Kilogram which became the unit of mass without reference to the mass of a cubic decimeter of water or to the Kilogram of the Archives. Each of the countries that subscribed to the International Metric Convention was assigned one or more copies of the international standards; these are known as National Prototype Meters and Kilograms.

The liter is a unit of capacity or volume. In 1964, the 12th General Conference on Weights and Measures redefined the liter as being one cubic decimeter. By its previous definition as being the volume occupied, under standard conditions, by a quantity of pure water having a mass of 1 kilogram, the liter was larger than the cubic decimeter by 28 parts per 1 000 000; except for determinations of high precision, this difference is so small as to be of no consequence.

The modernized metric system (SI) includes three classes of units:

> base units for length, mass, time, temperature, electricity, radiation and amount of substance;
>
> supplementary units for plane angle and solid angle; and
>
> derived units for all other quantities (e.g., work, force, power) expressed in terms of the nine base units and supplementary units.

For details, see NIST Special Publication 330 (1991), The International System of Units (SI) and NIST Special Publication 811, Guide for the Use of the International System of Units (available from the Superintendent of Documents, U.S. Government Printing Office, Washington, DC 20402).

2.2.4. The International Bureau of Weights and Measures. - The International Bureau of Weights and Measures was established at Sèvres, a suburb of Paris, France, in accordance with the International Metric Convention of May 20, 1875. At the Bureau there are kept the International Prototype Kilogram, many secondary standards, and equipment for comparing standards and making precision measurements. The Bureau, funded by assessment of the signatory governments, is truly international. In recent years the scope of the work at the International Bureau has been considerably broadened. It now carries on researches in the fields of electricity, photometry and radiometry, ionizing radiations, and time and frequency in addition to its work in mass, length, and thermometry.

2.2.5. Present Status of the Metric System in the United States. - The use of the metric system in this country was legalized by Act of Congress in 1866, but was not made obligatory then or since.

Following the signing of the Convention of the Meter in 1875, the United States acquired national prototype standards for the meter and the kilogram. U.S. Prototype Kilogram No. 20 continues to be the primary standard for mass in the United States; it is recalibrated from time to time at BIPM. The prototype meter has been replaced by modern stabilized lasers in accordance with the most recent definition of the meter.

From 1893 until 1959, the yard was defined as being equal exactly to 3600/3937 meter. In 1959, a small change was made in the definition of the yard to resolve discrepancies both in this country and abroad. Since 1959, the yard is defined as being equal exactly to 0.9144 meter; the new yard is shorter than the old yard by exactly two parts in a million. At the same time, it was decided that any data expressed in feet derived from geodetic surveys within the United States would continue to bear the relationship as defined in 1893 (one foot equals 1200/3937 meter). This foot is called the U.S. survey foot, while the foot defined in 1959 is called the international foot. Measurements expressed in U.S. statute miles, survey feet, rods, chains, links, or the squares thereof, and also acres should therefore be converted to the corresponding metric values by using pre-1959 conversion factors if more than five significant figure accuracy is involved.

Since 1970, actions have been taken to encourage the use of metric units of measurement in the United States. A brief summary of actions by Congress is provided below as reported in the Federal Register Notice dated December 20, 1990.

Section 403 of Public Law 93-380, the Education Amendment of 1974, states that it is the policy of the United States to encourage educational agencies and institutions to prepare students to use the metric system of measurement as part of the regular education program. Under both this act and the Metric Conversion Act of 1975, the "metric system of measurement" is defined as the International System of Units as established in 1960 by the General Conference on Weights and Measures and interpreted or modified for the United States by the Secretary of Commerce (sec. 4(4), Pub. L. 94-168; sec. (a)(3), Pub. L. 93-380). The Secretary has delegated authority under these subsections to the Director of the National Institute of Standards and Technology.

Section 5164 of Public Law 100-418, the Omnibus Trade and Competitiveness Act of 1988, amends Public Law 94-168, The Metric Conversion Act of 1975. In particular, section 3 of the latter act is amended to read as follows:

> "Sec. 3. It is therefore the declared policy of the United States"
>
> "(1) to designate the metric system of measurement as the preferred system of weights and measures for United States trade and commerce;
>
> "(2) to require that each Federal agency, by a date certain and to the extent economically feasible by the end of the fiscal year 1992, use the metric system of measurement in its procurements, grants, and other business-related activities, except to the extent that such use is impractical or is likely to cause significant inefficiencies or loss of markets to U.S. firms, such as when foreign competitors are producing competing products in non-metric units;
>
> "(3) to seek ways to increase understanding of the metric system of measurement through educational information and guidance and in Government publications; and
>
> "(4) to permit the continued use of traditional systems of weights and measures in nonbusiness activities."

The most recent revision of the Code of Federal Regulations makes the use of metric units mandatory for agencies of the Federal Government. (Federal Register, Vol. 56, No. 23, page 160, January 2, 1991.)

2.3. British and United States Systems of Measurement. - In the past, the customary system of weights and measures in the British Commonwealth countries and that in the United States were very similar; however, the SI metric system is now the official system of units in the United Kingdom, while the customary units are still predominantly used in the United States. Because references to the units of the old British customary system are still found, the following discussion describes the differences between the U.S. and British customary systems of units.

After 1959, the U.S. and the British inch were defined identically for scientific work and were identical in commercial usage. A similar situation existed for the U.S. and the British pound, and many relationships, such as 12 inches = 1 foot, 3 feet = 1 yard, and 1760 yards = 1 international mile, were the same in both countries; but there were some very important differences.

In the first place, the U.S. customary bushel and the U.S. gallon, and their subdivisions differed from the corresponding British Imperial units. Also the British ton is 2240 pounds, whereas the ton generally used in the United States is the short ton of 2000 pounds. The American colonists adopted the English wine gallon of 231 cubic inches. The English of that period used this wine gallon and they also had another gallon, the ale gallon of 282 cubic inches. In 1824, these two gallons were abandoned by the British when they adopted the British Imperial gallon, which is defined as the volume of 10 pounds of water, at a temperature of 62 °F, which, by calculation, is equivalent to 277.42 cubic inches. At the same time, the bushel was redefined as 8 gallons.

In the customary British system the units of dry measure are the same as those of liquid measure. In the United States these two are not the same, the gallon and its subdivisions are used in the measurement of liquids; the bushel, with its subdivisions, is used in the measurement of certain dry commodities. The U.S. gallon is divided into 4 liquid quarts and the U.S. bushel into 32 dry quarts. All the units of capacity or volume mentioned thus far are larger in the customary British system than in the U.S. system. But the British fluid ounce is smaller than the U.S. fluid ounce, because the British quart is divided into 40 fluid ounces whereas the U.S. quart is divided into 32 fluid ounces.

From the foregoing it is seen that in the c0ustomary British system an avoirdupois ounce of water at 62 °F has a volume of 1 fluid ounce, because 10 pounds is equivalent to 160 avoirdupois ounces, and 1 gallon is equivalent to 4 quarts, or 160 fluid ounces. This convenient relation does not exist in the U.S. system because a U.S. gallon of water at 62 °F weighs about 8-1/3 pounds, or 133-1/3 avoirdupois ounces, and the U.S. gallon is equivalent to 4 x 32, or 128 fluid ounces.

1 U.S. fluid ounce	=	1.041 British fluid ounces
1 British fluid ounce	=	0.961 U.S. fluid ounce
1 U.S. gallon	=	0.833 British Imperial gallon
1 British Imperial gallon	=	1.201 U.S. gallons

Among other differences between the customary British and the United States measurement systems, it should be noted that the use of the troy pound was abolished in England January 6, 1879, only the troy ounce and its subdivisions being retained, whereas the troy pound is still legal in the United States, although it is not now greatly used. The common use in England of the stone of 14 pounds should be mentioned, this being a unit now unused in the United States, although its influence was shown in the practice until World War II of selling flour by the barrel of 196 pounds (14 stones). In the apothecaries system of liquid measure the British insert a unit, the fluid scruple, equal to one third of a fluid drachm (spelled dram in the United States) between their minim and their fluid drachm. In the United States, the general practice now is to sell dry commodities, such as fruits and vegetables, by their mass.

2.4. Subdivision of Units. - In general, units are subdivided by one of three systems: (a) decimal, that is into tenths; (b) duodecimal, into twelfths; or (c) binary, into halves. Usually the subdivision is continued by the use of the same system. Each method has its advantages for certain purposes, and it cannot properly be said that any one method is "best" unless the use to which the unit and its subdivisions are to be put is known.

For example, if we are concerned only with measurements of length to moderate precision, it is convenient to measure and to express these lengths in feet, inches, and binary fractions of an inch, thus 9 feet 4-3/8 inches. However, if these measured lengths are to be subsequently used in calculations of area or volume, that method of subdivision at once becomes extremely inconvenient. For that reason, civil engineers, who are concerned with areas of land, volumes of cuts, fills, excavations, etc., instead of dividing the foot into inches and binary subdivisions of the inch, divide it decimally; that is, into tenths, hundredths, and thousandths of a foot.

The method of subdivision of a unit is thus largely made on the basis of convenience to the user. The fact that units have commonly been subdivided into certain subunits for centuries does not preclude their also having another mode of subdivision in some frequently used cases where convenience indicates the value of such other method. Thus, the gallon is usually subdivided into quarts and pints, but the majority of gasoline-measuring pumps of the price-computing type are graduated to show tenths of a gallon.

Although the mile has for centuries been divided into rods, yards, feet, and inches, the odometer part of an automobile speedometer indicates tenths of a mile. Although our dollar is divided into 100 parts, we habitually use and speak of halves and quarters. An illustration of rather complex subdividing is found on the scales used by draftsmen. These scales are of two types: (a) architects, which are commonly graduated with scales in which 3/32, 3/16, 1/8, 1/4, 3/8, 1/2, 3/4, 1, 1-1/2, and 3 inches, respectively, represent 1 foot full scale, as well as having a scale graduated in the usual manner to 1/16 inch; and (b) engineers, which are commonly subdivided to 10, 20, 30, 40, 50, and 60 parts to the inch.

The dictum of convenience applies not only to subdivisions of a unit but also to multiples of a unit. Elevations of land above sea level are given in feet even though the height may be several miles; the height of aircraft above sea level as given by an altimeter is likewise given in feet, no matter how high it may be.

On the other hand, machinists, toolmakers, gauge makers, scientists, and others who are engaged in precision measurements of relatively small distances, even though concerned with measurements of length only, find it convenient to use the inch, instead of the tenth of a foot, but to divide the inch decimally to tenths, hundredths, thousandths, etc., even down to millionths of an inch. Verniers, micrometers, and other precision measuring instruments are usually graduated in this manner. Machinist scales are commonly graduated decimally along one edge and are also graduated along another edge to binary fractions as small as 1/64 inch. The scales with binary fractions are used only for relatively rough measurements.

It is seldom convenient or advisable to use binary subdivisions of the inch that are smaller than 1/64. In fact, 1/32-, 1/16-, or 1/8-inch subdivisions are usually preferable for use on a scale to be read with the unaided eye.

2.5. Arithmetical Systems of Numbers. - The subdivision of units of measurement is closely associated with arithmetical systems of numbers. The systems of units used in this country for commercial and scientific work, having many origins as has already been shown, naturally show traces of the various number systems associated with their origins and developments. Thus, (a) the binary subdivision has come down to us from the Hindus, (b) the duodecimal system of fractions from the Romans, (c) the decimal system from the Chinese and Egyptians, some developments having been made by the Hindus, and (d) the sexagesimal system (division by 60) now illustrated in the subdivision of units of angle and of time, from the ancient Babylonians. The use of decimal numbers in measurements is becoming the standard practice.

3. Standards of Length, Mass, and Capacity or Volume

3.1. Standards of Length. - The meter, which is defined in terms of the speed of light in vacuum, is the unit on which all length measurements are based.

The yard is defined[1] as follows:

1 yard = 0.914 4 meter

and the inch is exactly equal to 25.4 millimeters.

3.1.1. Calibration of Length Standards. - NIST calibrates standards of length including meter bars, yard bars, miscellaneous precision line standards, steel tapes, invar geodetic tapes, precision gauge blocks, micrometers, and limit gauges. It also measures the linear dimensions of miscellaneous apparatus such as penetration needles, cement sieves, and hemacytometer chambers. In general, NIST accepts for calibration only apparatus of such material, design, and construction as to ensure accuracy and permanence sufficient to justify calibration by the Institute. Calibrations are made in accordance with fee schedules, copies of which may be obtained by application to NIST.

NIST does not calibrate carpenters rules, machinists scales, draftsman scales, and the like. Such apparatus, if calibration is required, should be submitted to State or local weights and measures officials.

3.2. Standards of Mass. - The primary standard of mass for this country is United States Prototype Kilogram 20, which is a platinum-iridium cylinder kept at NIST. The value of this mass standard is known in terms of the International Prototype Kilogram, a platinum-iridium standard which is kept at the International Bureau of Weights and Measures.

In colonial times the British standards were considered to be the primary standards of the United States. Later, the U.S. avoirdupois pound was defined in terms of the Troy Pound of the Mint, which is a brass standard kept at the United States Mint in Philadelphia. In 1911, the Troy Pound of the Mint was superseded, for coinage purposes, by the Troy Pound of the Institute.

The avoirdupois pound is defined in terms of the kilogram by the relation:

1 avoirdupois pound = 0.453 592 37 kilogram.[2]

These changes in definition have not made any appreciable change in the value of the pound.

The grain is 1/7000 of the avoirdupois pound and is identical in the avoirdupois, troy, and apothecaries systems. The troy ounce and the apothecaries ounce differ from the avoirdupois ounce but are equal to each other, and equal to 480 grains. The avoirdupois ounce is equal to 437-1/2 grains.

3.2.1. Mass and Weight. - The mass of a body is a measure of its inertial property or the amount of matter it contains. The weight of a body is a measure of the force exerted on it by gravity or the force needed to support it. Gravity on earth gives a body a downward acceleration of about 9.8 m/s^2. (In common parlance, weight is often used as a synonym for mass as in weights and measures.) The incorrect use of weight in place of mass should be phased out, and the term mass used when mass is meant.

Standards of mass are ordinarily calibrated by comparison to a reference standard of mass. If two objects are compared on a balance and give the same balance indication, they have the same "mass" (excluding the effect of air buoyancy). The forces of gravity on the two objects are balanced. Even though the value of the acceleration of gravity, g, is different from location to location, because the two objects of equal mass in the same location (where both masses are acted upon by the same g) will be affected in the same manner and by the same amount by any change in the value of g, the two objects will balance each other under any value of g.

However, on a spring balance the mass of a body is not balanced against the mass of another body. Instead, the gravitational force on the body is balanced by the restoring force of a spring. Therefore, if a very sensitive spring balance is used, the indicated mass of the body would be found to change if the spring balance and the body were moved from one locality to another locality with a different acceleration of gravity. But a spring balance is usually used in one locality and is adjusted or calibrated to indicate mass at that locality.

---

[1] See Federal Register for July 1, 1959.

[2] See Federal Register for July 1, 1959. See also next to last paragraph of 2.2.5.

3.2.2. Effect of Air Buoyancy. - Another point that must be taken into account in the calibration and use of standards of mass is the buoyancy or lifting effect of the air. A body immersed in any fluid is buoyed up by a force equal to the force of gravity on the displaced fluid. Two bodies of equal mass, if placed one on each pan of an equal-arm balance, will balance each other in a vacuum. A comparison in a vacuum against a known mass standard gives "true mass." If compared in air, however, they will not balance each other unless they are of equal volume. If of unequal volume, the larger body will displace the greater volume of air and will be buoyed up by a greater force than will the smaller body, and the larger body will appear to be of less mass than the smaller body. The greater the difference in volume, and the greater the density of the air in which the comparison weighing is made, the greater will be the apparent difference in mass. For that reason, in assigning a precise numerical value of mass to a standard, it is necessary to base this value on definite values for the air density and the density of the mass standard of reference.

The apparent mass of an object is equal to the mass of just enough reference material of a specified density (at 20 °C) that will produce a balance reading equal to that produced by the object if the measurements are done in air with a density of 1.2 mg/cm^3 at 20 °C. The original basis for reporting apparent mass is apparent mass versus brass. The apparent mass versus a density of 8.0 g/cm^3 is the more recent definition, and is used extensively throughout the world. The use of apparent mass versus 8.0 g/cm^3 is encouraged over apparent mass versus brass. The difference in these apparent mass systems is insignificant in most commercial weighing applications.

A full discussion of this topic is given in NIST Monograph 133, Mass and Mass Values, by Paul E. Pontius [for sale by the National Technical Information Service, 5285 Port Royal Road, Springfield, VA 22161 (COM 7450309).]

3.2.3. Calibrations of Standards of Mass. - Standards of mass regularly used in ordinary trade should be tested by State or local weights and measures officials. NIST calibrates mass standards submitted, but it does not manufacture or sell them. Information regarding the mass calibration service of NIST and the regulations governing the submission of standards of mass to NIST for calibration are contained in NIST Special Publication 250, Calibration and Related Measurement Services of NIST, latest edition.

3.3. Standards of Capacity. - Units of capacity or volume, being derived units, are in this country defined in terms of linear units. Laboratory standards have been constructed and are maintained at NIST. These have validity only by calibration with reference either directly or indirectly to the linear standards. Similarly, standards of capacity have been made and distributed to the several States. Other standards of capacity have been verified by calibration for a wide variety of uses in science, technology, and commerce.

3.3.1. Calibrations of Standards of Capacity. – Calibrations are made by NIST on capacity or volume standards that are in the customary units of trade; that is, the gallon, its multiples, and submultiples, or in metric units. Furthermore, NIST calibrates precision grade volumetric glassware which is normally in metric units. Calibrations are made in accordance with fee schedules, copies of which may be obtained by application to NIST.

3.4. Maintenance and Preservation of Fundamental Standard of Mass. - It is a statutory responsibility of NIST to maintain and preserve the national standard of mass at NIST and also to realize all the other base units. It is fully protected by an alarm system. All measurements made with this standard are conducted in special air-conditioned laboratories to which the standard is taken a sufficiently long time before the observations to ensure that the standard will be in a state of equilibrium under standard conditions when the measurements or comparisons are made. Hence, it is not necessary to maintain the standard at standard conditions, but care is taken to prevent large changes of temperature. More important is the care to prevent any damage to the standard because of careless handling.

4. Specialized Use of the Terms "Ton" and "Tonnage"

As weighing and measuring are important factors in our everyday lives, it is quite natural that questions arise about the use of various units and terms and about the magnitude of quantities involved. For example, the words "ton" and "tonnage" are used in widely different senses, and a great deal of confusion has arisen regarding the application of these terms.

The ton is used as a unit of measure in two distinct senses: (1) as a unit of mass, and (2) as a unit of capacity or volume.

In the first sense, the term has the following meanings:

a. The short, or net ton of 2000 pounds.

b. The long, gross, or shipper's ton of 2240 pounds.

c. The metric ton of 1000 kilograms, or 2204.6 pounds.

In the second sense (capacity), it is usually restricted to uses relating to ships and has the following meaning:

a. The register ton of 100 cubic feet.

b. The measurement ton of 40 cubic feet.

c. The English water ton of 224 British Imperial gallons.

In the United States and Canada the ton (mass) most commonly used is the short ton, in Great Britain it is the long ton, and in countries using the metric system it is the metric ton. The register ton and the measurement ton are capacity or volume units used in expressing the tonnage of ships. The English water ton is used, chiefly in Great Britain, in statistics dealing with petroleum products.

There have been many other uses of the term ton such as the timber ton of 40 cubic feet and the wheat ton of 20 bushels, but their use has been local and the meanings have not been consistent from one place to another.

Properly, the word “tonnage” is used as a noun only in respect to the capacity or volume and dimensions of ships, and to the amount of the ship's cargo. There are two distinct kinds of tonnage; namely, vessel tonnage and cargo tonnage and each of these is used in various meanings.

The several kinds of vessel tonnage are as follows:

Gross tonnage, or gross register tonnage, is the total cubical capacity or volume of a ship expressed in register tons of 100 cubic feet, or 2.83 cubic meters, less such space as hatchways, bakeries, galleys, etc., as are exempted from measurement by different governments. There is some lack of uniformity in the gross tonnages as given by different nations on account of lack of agreement on the spaces that are to be exempted. Official merchant marine statistics of most countries are published in terms of the gross register tonnage. Press references to ship tonnage are usually to the gross tonnage.

The net tonnage, or net register tonnage, is the gross tonnage less the different spaces specified by maritime nations in their measurement rules and laws. The spaces that are deducted are those totally unavailable for carrying cargo, such as the engine room, coal bunkers, crews quarters, chart and instrument room, etc. The net tonnage is used in computing the amount of cargo that can be loaded on a ship. It is used as the basis for wharfage and other similar charges.

The register under-deck tonnage is the cubical capacity of a ship under her tonnage deck expressed in register tons. In a vessel having more than one deck the tonnage deck is the second from the keel.

There are several variations of displacement tonnage.

The dead weight tonnage is the difference between the “loaded” and “light” displacement tonnages of a vessel. It is expressed in terms of the long ton of 2240 pounds, or the metric ton of 2204.6 pounds, and is the weight of fuel, passengers, and cargo that a vessel can carry when loaded to its maximum draft.

The second variety of tonnage, cargo tonnage, refers to the weight of the particular items making up the cargo. In overseas traffic it is usually expressed in long tons of 2240 pounds or metric tons of 2204.6 pounds. The short ton is only occasionally used. Therefore, the cargo tonnage is very distinct from vessel tonnage.

[THIS PAGE LEFT INTENTIONALLY BLANK]

Appendix C

General Tables of Units of Measurement

These tables have been prepared for the benefit of those requiring tables of units for occasional ready reference. In Section 4 of this appendix, the tables are carried out to a large number of decimal places and exact values are indicated by underlining. In most of the other tables only a limited number of decimal places are given, thus making the tables better adapted to the average user

.

1. Tables of Metric Units of Measurement

In the metric system of measurement, designations of multiples and subdivisions of any unit may be arrived at by combining with the name of the unit the prefixes deka, hecto, and kilo meaning, respectively, 10, 100, and 1 000, and deci, centi, and milli, meaning, respectively, one-tenth, one-hundredth, and one-thousandth. In some of the following metric tables, some such multiples and subdivisions have not been included for the reason that these have little, if any currency in actual usage.

In certain cases, particularly in scientific usage, it becomes convenient to provide for multiples larger than 1000 and for subdivisions smaller than one-thousandth. Accordingly, the following prefixes have been introduced and these are now generally recognized:

yotta,	(Y)	meaning 10^{24}	deci,	(d),	meaning 10^{-1}
zetta,	(Z),	meaning 10^{21}	centi,	(c),	meaning 10^{-2}
exa,	(E),	meaning 10^{18}	milli,	(m),	meaning 10^{-3}
peta,	(P),	meaning 10^{15}	micro,	(µ),	meaning 10^{-6}
tera,	(T),	meaning 10^{12}	nano,	(n),	meaning 10^{-9}
giga,	(G),	meaning 10^{9}	pico,	(p),	meaning 10^{-12}
mega,	(M),	meaning 10^{6}	femto,	(f),	meaning 10^{-15}
kilo,	(k),	meaning 10^{3}	atto,	(a),	meaning 10^{-18}
hecto,	(h),	meaning 10^{2}	zepto,	(z),	meaning 10^{-21}
deka,	(da),	meaning 10^{1}	yocto,	(y),	meaning 10^{-24}

Thus a kilometer is 1000 meters and a millimeter is 0.001 meter.

Units of Length

10 millimeters (mm)	= 1 centimeter (cm)
10 centimeters	= 1 decimeter (dm)
	= 100 millimeters
10 decimeters	= 1 meter (m)
	= 1000 millimeters
10 meters	= 1 dekameter (dam)
10 dekameters	= 1 hectometer (hm)
	= 100 meters
10 hectometers	= 1 kilometer (km)
	= 1000 meters

Units of Area

100 square millimeters (mm^2)	= 1 square centimeter (cm^2)
100 square centimeters	= 1 square decimeter (dm^2)
100 square decimeters	= 1 square meter (m^2)
100 square meters	= 1 square dekameter (dam^2)
	= 1 are
100 square dekameters	= 1 square hectometer (hm^2)
	= 1 hectare (ha)
100 square hectometers	= 1 square kilometer (km^2)

Units of Liquid Volume

10 milliliters (mL)	= 1 centiliter (cL)
10 centiliters	= 1 deciliter (dL)
	= 100 milliliters
10 deciliters	= 1 liter[1]
	= 1000 milliliters
10 liters	= 1 dekaliter (daL)
10 dekaliters	= 1 hectoliter (hL)
	= 100 liters
10 hectoliters	= 1 kiloliter (kL)
	= 1000 liters

Units of Volume

1000 cubic millimeters (mm^3)	= 1 cubic centimeter (cm^3)
1000 cubic centimeters	= 1 cubic decimeter (dm^3)
	= 1 000 000 cubic millimeters
1000 cubic decimeters	= 1 cubic meter (m^3)
	= 1 000 000 cubic centimeters
	= 1 000 000 000 cubic millimeters

[1] By action of the 12th General Conference on Weights and Measures (1964) the liter is a special name for the cubic decimeter.

Units of Mass

10 milligrams (mg)	= 1 centigram (cg)
10 centigrams	= 1 decigram (dg)
	= 100 milligrams
10 decigrams	= 1 gram (g)
	= 1000 milligrams
10 grams	= 1 dekagram (dag)
10 dekagrams	= 1 hectogram (hg)
	= 100 grams
10 hectograms	= 1 kilogram (kg)
	= 1000 grams
1000 kilograms	= 1 megagram (Mg) or
	1 metric ton (t)

2. Tables of U.S. Units of Measurement[2]

In these tables where foot or mile is underlined, it is survey foot or U.S. statute mile rather than international foot or mile that is meant (see Section 2.2.4.).

Units of Length

12 inches (in)	= 1 foot (ft)
3 feet	= 1 yard (yd)
16-1/2 feet	= 1 rod (rd), pole, or perch
40 rods	= 1 furlong (fur)
	= 660 feet
8 furlongs	= 1 U.S. statute mile (mi)
	= 5280 feet
1852 meters	= 6076.115 49 feet (approximately)
	= 1 international nautical mile

Units of Area[3]

144 square inches (in^2)	= 1 square foot (ft^2)
9 square feet	= 1 square yard (yd^2)
	= 1296 square inches
272-1/4 square feet	= 1 square rod (sq rd)
160 square rods	= 1 acre = 43 560 square feet
640 acres	= 1 square mile (mi^2)
1 mile square	= 1 section of land
6 miles square	= 1 township
	= 36 sections
	= 36 square miles

[2] This section lists units of measurement that have traditionally been used in the United States. In keeping with the Omnibus Trade and Competitiveness Act of 1988, the ultimate objective is to make the International System of Units the primary measurement system used in the United States.

Units of Volume[3]

1728 cubic inches (in^3)	= 1 cubic foot (ft^3)
27 cubic feet	= 1 cubic yard (yd^3)

Gunter's or Surveyors Chain Units of Measurement

0.66 foot (ft)	= 1 link (li)
100 links	= 1 chain (ch)
	= 4 rods = 66 feet
80 chains	= 1 U.S. statute mile (mi)
	= 320 rods = 5280 feet

Units of Liquid Volume[4]

4 gills (gi)	= 1 pint (pt)
	= 28.875 cubic inches
2 pints	= 1 quart (qt)
	= 57.75 cubic inches
4 quarts	= 1 gallon (gal)
	= 231 cubic inches
	= 8 pints = 32 gills

Apothecaries Units of Liquid Volume

60 minims (min or ♈)	= 1 fluid dram (fl dr or ℥)
	= 0.225 6 cubic inch
8 fluid drams	= 1 fluid ounce (fl oz or ℥)
	= 1.804 7 cubic inches
16 fluid ounces	= 1 pint (pt or **O**)
	= 28.875 cubic inches
	= 128 fluid drams
2 pints	= 1 quart (qt)
	= 57.75 cubic inches
	= 32 fluid ounces
	= 256 fluid drams
4 quarts	= 1 gallon (gal)
	= 231 cubic inches
	= 128 fluid ounces
	= 1024 fluid drams

[3] Squares and cubes of customary but not of metric units are sometimes expressed by the use of abbreviations rather than symbols. For example, sq ft means square foot, and cu ft means cubic foot.

[4] When necessary to distinguish the liquid pint or quart from the dry pint or quart, the word "liquid" or the abbreviation "liq" should be used in combination with the name or abbreviation of the liquid unit.

Units of Dry Volume[5]

2 pints (pt)	= 1 quart (qt)
	= 67.200 6 cubic inches
8 quarts	= 1 peck (pk)
	= 537.605 cubic inches
	= 16 pints
4 pecks	= 1 bushel (bu)
	= 2150.42 cubic inches
	= 32 quarts

Avoirdupois Units of Mass[6]

The "grain" is the same in avoirdupois, troy, and apothecaries units of mass.

27-11/32 grains	= 1 dram (dr)
16 drams	= 1 ounce (oz)
	= 437-1/2 grains
16 ounces	= 1 pound (lb)
	= 256 drams
	= 7000 grains
100 pounds	= 1 hundredweight (cwt)[7]
20 hundredweights	= 1 ton
	= 2000 pounds[7]

In "gross" or "long" measure, the following values are recognized:

112 pounds	= 1 gross or long hundredweight[7]
20 gross or long	= 1 gross or long ton
hundredweights	= 2240 pounds[7]

Troy Units of Mass

The "grain" is the same in avoirdupois, troy, and apothecaries units of mass.

24 grains	= 1 pennyweight (dwt)
20 pennyweights	= 1 ounce troy (oz t) = 480 grains
12 ounces troy	= 1 pound troy (lb t)
	= 240 pennyweights = 5760 grains

[5] When necessary to distinguish dry pint or quart from the liquid pint or quart, the word "dry" should be used in combination with the name or abbreviation of the dry unit.

[6] When necessary to distinguish the avoirdupois dram from the apothecaries dram, or to distinguish the avoirdupois dram or ounce from the fluid dram or ounce, or to distinguish the avoirdupois ounce or pound from the troy or apothecaries ounce or pound, the word "avoirdupois" or the abbreviation "avdp" should be used in combination with the name or abbreviation of the avoirdupois unit.

Apothecaries Units of Mass

The "grain" is the same in avoirdupois, troy, and apothecaries units of mass.

20 grains	= 1 scruple (s ap or ℈)
3 scruples	= 1 dram apothecaries (dr ap or ʒ)
	= 60 grains
8 drams apothecaries	= 1 ounce apothecaries (oz ap or ℥)
	= 24 scruples = 480 grains
12 ounces apothecaries	= 1 pound apothecaries (lb ap)
	= 96 drams apothecaries
	= 288 scruples = 5760 grains

3. Notes on British Units of Measurement

In Great Britain, the yard, the avoirdupois pound, the troy pound, and the apothecaries pound are identical with the units of the same names used in the United States. The tables of British linear measure, troy mass, and apothecaries mass are the same as the corresponding United States tables, except for the British spelling "drachm" in the table of apothecaries mass. The table of British avoirdupois mass is the same as the United States table up to 1 pound; above that point the table reads:

14 pounds	= 1 stone
2 stones	= 1 quarter = 28 pounds
4 quarters	= 1 hundredweight
	= 112 pounds
20 hundredweight	= 1 ton = 2240 pounds

The present British gallon and bushel--known as the "Imperial gallon" and "Imperial bushel"--are, respectively, about 20 percent and 3 percent larger than the United States gallon and bushel. The Imperial gallon is defined as the volume of 10 avoirdupois pounds of water under specified conditions, and the Imperial bushel is defined as 8 Imperial gallons. Also, the subdivision of the Imperial gallon as presented in the table of British apothecaries fluid measure differs in two important respects from the corresponding United States subdivision, in that the Imperial gallon is divided into 60 fluid ounces

[7] When the terms "hundredweight" and "ton" are used unmodified, they are commonly understood to mean the 100-pound hundredweight and the 2000-pound ton, respectively; these units may be designated "net" or "short" when necessary to distinguish them from the corresponding units in gross or long measure.

(whereas the United States gallon is divided into 128 fluid ounces), and a "fluid scruple" is included. The full table of British measures of capacity (which are used alike for liquid and for dry commodities) is as follows:

4 gills	= 1 pint
2 pints	= 1 quart
4 quarts	= 1 gallon
2 gallons	= 1 peck
8 gallons (4 pecks)	= 1 bushel
8 bushels	= 1 quarter

The full table of British apothecaries measure is as follows:

20 minims	= 1 fluid scruple
3 fluid scruples	= 1 fluid drachm
	= 60 minims
8 fluid drachms	= 1 fluid ounce
20 fluid ounces	= 1 pint
8 pints	= 1 gallon (160 fluid ounces)

4. Tables of Units of Measurement

(all underlined figures are exact)

Units of Length - International Measure[8]

Units		Inches	Feet	Yards	Miles	Centimeters	Meters
1 inch	=	1	0.083 333 33	0.027 777 78	0.000 015 782 83	2.54	0.025 4
1 foot	=	12	1	0.333 333 3	0.000 189 393 9	30.48	0.304 8
1 yard	=	36	3	1	0.000 568 181 8	91.44	0.914 4
1 mile	=	63 360	5 280	1 760	1	160 934.4	1609.344
1 centimeter	=	0.393 700 8	0.032 808 40	0.010 936 13	0.000 006 213 712	1	0.01
1 meter	=	39.370 08	3.280 840	1.093 613	0.000 621 371 2	100	1

Units of Length - Survey Measure[8]

Units		Links	Feet	Rods	Chains	Miles	Meters
1 link	=	1	0.66	0.04	0.01	0.000 125	0.201 168 4
1 foot	=	1.515 152	1	0.060 606 06	0.015 151 52	0.000 189 393 9	0.304 800 6
1 rod	=	25	16.5	1	0.25	0.003 125	5.029 210
1 chain	=	100	66	4	1	0.0125	20.116 84
1 mile	=	8 000	5 280	320	80	1	1609.347
1 meter	=	4.970 960	3.280 833	0.198 838 4	0.049 709 60	0.000 621 369 9	1

---

[8] One international foot = 0.999 998 survey foot (exactly)
One international mile = 0.999 998 survey mile (exactly)

Note: 1 survey foot = 1200/3937 meter (exactly)
1 international foot = 12 x 0.0254 meter (exactly)
1 international foot = 0.0254 x 39.37 survey foot (exactly)

Units of Area - International Measure[9]

(all underlined figures are exact)

Units		Square Inches	Square Feet	Square Yards
1 square inch	=	1	0.006 944 444	0.000 771 604 9
1 square foot	=	144	1	0.111 111 1
1 square yard	=	1296	9	1
1 square mile	=	4 014 489 600	27 878 400	3 097 600
1 square centimeter	=	0.155 000 3	0.001 076 391	0.000 119 599 0
1 square meter	=	1550.003	10.763 91	1.195 990

Units		Square Miles	Square Centimeters	Square Meters
1 square inch	=	0.000 000 000 249 097 7	6.451 6	0.000 645 16
1 square foot	=	0.000 000 035 870 06	929.030 4	0.092 903 04
1 square yard	=	0.000 000 322 830 6	8361.273 6	0.836 127 36
1 square mile	=	1	25 899 881 103.36	2 589 988.110 336
1 square centimeter	=	0.000 000 000 038 610 22	1	0.0001
1 square meter	=	0.000 000 386 102 2	10 000	1

Units of Area - Survey Measure[9]

Units		Square Feet	Square Rods	Square Chains	Acres
1 square foot	=	1	0.003 673 095	0.000 229 568 4	0.000 022 956 84
1 square rod	=	272.25	1	0.062 5	0.006 25
1 square chain	=	4356	16	1	0.1
1 acre	=	43 560	160	10	1
1 square mile	=	27 878 400	102 400	6400	640
1 square meter	=	10.763 87	0.039 536 70	0.002 471 044	0.000 247 104 4
1 hectare	=	107 638.7	395.367 0	24.710 44	2.471 044

Units		Square Miles	Square Meters	Hectares
1 square foot	=	0.000 000 035 870 06	0.092 903 41	0.000 009 290 341
1 square rod	=	0.000 009 765 625	25.292 95	0.002 529 295
1 square chain	=	0.000 156 25	404.687 3	0.040 468 73
1 acre	=	0.001 562 5	4 046.873	0.404 687 3
1 square mile	=	1	2 589 998	258.999 8
1 square meter	=	0.000 000 386 100 6	1	0.000 1
1 hectare	=	0.003 861 006	10 000	1

[9] One square survey foot = 1.000 004 square international feet
One square survey mile = 1.000 004 square international miles

Units of Volume

(all underlined figures are exact)

Units		Cubic Inches	Cubic Feet	Cubic Yards
1 cubic inch	=	1	0.000 578 703 7	0.000 021 433 47
1 cubic foot	=	1728	1	0.037 037 04
1 cubic yard	=	46 656	27	1
1 cubic centimeter	=	0.061 023 74	0.000 035 314 67	0.000 001 307 951
1 cubic decimeter	=	61.023 74	0.035 314 67	0.001 307 951
1 cubic meter	=	61 023.74	35.314 67	1.307 951

Units		Milliliters (Cubic Centimeters)	Liters (Cubic Decimeters)	Cubic Meters
1 cubic inch	=	16.387 064	0.016 387 064	0.000 016 387 064
1 cubic foot	=	28 316.846 592	28.316 846 592	0.028 316 846 592
1 cubic yard	=	764 554.857 984	764.554 857 984	0.764 554 857 984
1 cubic centimeter	=	1	0.001	0.000 001
1 cubic decimeter	=	1000	1	0.001
1 cubic meter	=	1 000 000	1000	1

Units of Capacity or Volume - Dry Volume Measure

Units		Dry Pints	Dry Quarts	Pecks	Bushels
1 dry pint	=	1	0.5	0.062 5	0.015 625
1 dry quart	=	2	1	0.125	0.031 25
1 peck	=	16	8	1	0.25
1 bushel	=	64	32	4	1
1 cubic inch	=	0.029 761 6	0.014 880 8	0.001 860 10	0.000 465 025
1 cubic foot	=	51.428 09	25.714 05	3.214 256	0.803 563 95
1 liter	=	1.816 166	0.908 083 0	0.113 510 4	0.028 377 59
1 cubic meter	=	1 816.166	908.083 0	113.510 4	28.377 59

Units		Cubic Inches	Cubic Feet	Liters	Cubic Meters
1 dry pint	=	33.600 312 5	0.019 444 63	0.550 610 5	0.000 550 610 5
1 dry quart	=	67.200 625	0.038 889 25	1.101 221	0.001 101 221
1 peck	=	537.605	0.311 114	8.809 768	0.008 809 768
1 bushel	=	2 150.42	1.244 456	35.239 07	0.035 239 07
1 cubic inch	=	1	0.000 578 703 7	0.016 387 06	0.000 016 387 06
1 cubic foot	=	1728	1	28.316 85	0.028 316 85
1 liter	=	61.023 74	0.035 314 67	1	0.001
1 cubic meter	=	61 023.74	35.314 67	1000	1

Units of Capacity or Volume - Liquid Volume Measure

(all underlined figures are exact)

Units		Minims	Fluid Drams	Fluid Ounces	Gills
1 minim	=	1	0.016 666 67	0.002 083 333	0.000 520 833 3
1 fluid dram	=	60	1	0.125	0.031 25
1 fluid ounce	=	480	8	1	0.25
1 gill	=	1920	32	4	1
1 liquid pint	=	7680	128	16	4
1 liquid quart	=	15 360	256	32	8
1 gallon	=	61 440	1024	128	32
1 cubic inch	=	265.974 0	4.432 900	0.554 112 6	0.138 528 1
1 cubic foot	=	459 603.1	7660.052	957.506 5	239.376 6
1 milliliter	=	16.230 73	0.270 512 2	0.033 814 02	0.008 453 506
1 liter	=	16 230.73	270.512 2	33.814 02	8.453 506

Units		Liquid Pints	Liquid Quarts	Gallons	Cubic Inches
1 minim	=	0.000 130 208 3	0.000 065 104 17	0.000 016 276 04	0.003 759 766
1 fluid dram	=	0.007 812 5	0.003 906 25	0.000 976 562 5	0.225 585 94
1 fluid ounce	=	0.062 5	0.031 25	0.007 812 5	1.804 687 5
1 gill	=	0.25	0.125	0.031 25	7.218 75
1 liquid pint	=	1	0.5	0.125	28.875
1 liquid quart	=	2	1	0.25	57.75
1 gallon	=	8	4	1	231
1 cubic inch	=	0.034 632 03	0.017 316 02	0.004 329 004	1
1 cubic foot	=	59.844 16	29.922 08	7.480 519	1728
1 milliliter	=	0.002 113 376	0.001 056 688	0.000 264 172 1	0.061 023 74
1 liter	=	2.113 376	1.056 688	0.264 172 1	61.023 74

Units		Cubic Feet	Milliliters	Liters
1 minim	=	0.000 002 175 790	0.061 611 52	0.000 061 611 52
1 fluid dram	=	0.000 130 547 4	3.696 691	0.003 696 691
1 fluid ounce	=	0.001 044 379	29.573 53	0.029 573 53
1 gill	=	0.004 177 517	118.294 1	0.118 294 1
1 liquid pint	=	0.016 710 07	473.176 5	0.473 176 5
1 liquid quart	=	0.033 420 14	946.352 9	0.946 352 9
1 gallon	=	0.133 680 6	3785.412	3.785 412
1 cubic inch	=	0.000 578 703 7	16.387 06	0.016 387 06
1 cubic foot	=	1	28 316.85	28.316 85
1 milliliter	=	0.000 035 314 67	1	0.001
1 liter	=	0.035 314 67	1000	1

Units of Mass Not Less Than Avoirdupois Ounces

(all underlined figures are exact)

Units		Avoirdupois Ounces	Avoirdupois Pounds	Short Hundredweights	Short tons
1 avoirdupois ounce	=	1	0.0625	0.000 625	0.000 031 25
1 avoirdupois pound	=	16	1	0.01	0.000 5
1 short hundredweight	=	1600	100	1	0.05
1 short ton	=	32 000	2000	20	1
1 long ton	=	35 840	2240	22.4	1.12
1 kilogram	=	35.273 96	2.204 623	0.022 046 23	0.001 102 311
1 metric ton	=	35 273.96	2204.623	22.046 23	1.102 311

Units		Long Tons	Kilograms	Metric Tons
1 avoirdupois ounce	=	0.000 027 901 79	0.028 349 523 125	0.000 028 349 523 125
1 avoirdupois pound	=	0.000 446 428 6	0.453 592 37	0.000 453 592 37
1 short hundredweight	=	0.044 642 86	45.359 237	0.045 359 237
1 short ton	=	0.892 857 1	907.184 74	0.907 184 74
1 long ton	=	1	1016.046 908 8	1.016 046 908 8
1 kilogram	=	0.000 984 206 5	1	0.001
1 metric ton	=	0.984 206 5	1000	1

Units of Mass Not Greater Than Pounds and Kilograms

(all underlined figures are exact)

Units		Grains	Apothecaries Scruples	Pennyweights	Avoirdupois Drams
1 grain	=	1	0.05	0.041 666 67	0.036 571 43
1 apoth. scruple	=	20	1	0.833 333 3	0.731 428 6
1 pennyweight	=	24	1.2	1	0.877 714 3
1 avdp. dram	=	27.343 75	1.367 187 5	1.139 323	1
1 apoth. dram	=	60	3	2.5	2.194 286
1 avdp. ounce	=	437.5	21.875	18.229 17	16
1 apoth. or troy oz.	=	480	24	20	17.554 29
1 apoth. or troy pound	=	5760	288	240	210.651 4
1 avdp. pound	=	7000	350	291.666 7	256
1 milligram	=	0.015 432 36	0.000 771 617 9	0.000 643 014 9	0.000 564 383 4
1 gram	=	15.432 36	0.771 617 9	0.643 014 9	0.564 383 4
1 kilogram	=	15432.36	771.617 9	643.014 9	564.383 4

Units		Apothecaries Drams	Avoirdupois Ounces	Apothecaries or Troy Ounces	Apothecaries or Troy Pounds
1 grain	=	0.016 666 67	0.002 285 714	0.002 083 333	0.000 173 611 1
1 apoth. scruple	=	0.333 333 3	0.045 714 29	0.041 666 67	0.003 472 222
1 pennyweight	=	0.4	0.054 857 14	0.05	0.004 166 667
1 avdp. dram	=	0.455 729 2	0.062 5	0.56 966 15	0.004 747 179
1 apoth. dram	=	1	0.137 142 9	0.125	0.010 416 67
1 avdp. ounce	=	7.291 667	1	0.911 458 3	0.075 954 86
1 apoth. or troy ounce	=	8	1.097 143	1	0.083 333 333
1 apoth. or troy pound	=	96	13.165 71	12	1
1 avdp. pound	=	116.666 7	16	14.583 33	1.215 278
1 milligram	=	0.000 257 206 0	0.000 035 273 96	0.000 032 150 75	0.000 002 679 229
1 gram	=	0.257 206 0	0.035 273 96	0.032 150 75	0.002 679 229
1 kilogram	=	257.206 0	35.273 96	32.150 75	2.679 229

Units		Avoirdupois Pounds	Milligrams	Grams	Kilograms
1 grain	=	0.000 142 857 1	64.798 91	0.064 798 91	0.000 064 798 91
1 apoth. scruple	=	0.002 857 143	1295.978 2	1.295 978 2	0.001 295 978 2
1 pennyweight	=	0.003 428 571	1555.173 84	1.555 173 84	0.001 555 173 84
1 avdp. dram	=	0.003 906 25	1771.845 195 312 5	1.771 845 195 312 5	0.001 771 845 195 312 5
1 apoth. dram	=	0.008 571 429	3887.934 6	3.887 934 6	0.003 887 934 6
1 avdp. ounce	=	0.062 5	28 349.523 125	28.349 523 125	0.028 349 523 125
1 apoth. or troy ounce	=	0.068 571 43	31 103.476 8	31.103 476 8	0.031 103 476 8
1 apoth. or troy pound	=	0.822 857 1	373 241.721 6	373.241 721 6	0.373 241 721 6
1 avdp. pound	=	1	453 592.37	453.592 37	0.453 592 37
1 milligram	=	0.000 002 204 623	1	0.001	0.000 001
1 gram	=	0.002 204 623	1000	1	0.001
1 kilogram	=	2.204 623	1 000 000	1000	1

5. Tables of Equivalents

In these tables it is necessary to differentiate between the "international foot" and the "survey foot" (see Section 2.2.4.); the survey foot is underlined.

When the name of a unit is enclosed in brackets (thus, [1 hand] . . .), this indicates (1) that the unit is not in general current use in the United States, or (2) that the unit is believed to be based on "custom and usage" rather than on formal authoritative definition.

Equivalents involving decimals are, in most instances, rounded off to the third decimal place except where they are exact, in which cases these exact equivalents are so designated. The equivalents of the imprecise units "tablespoon" and "teaspoon" are rounded to the nearest milliliter.

UNITS OF LENGTH

angstrom (Å)[10]----------	0.1 nanometer (exactly) 0.000 1 micrometer (exactly) 0.000 000 1 millimeter (exactly) 0.000 000 004 inch
1 cable's length----------	120 fathoms (exactly) 720 <u>feet</u> (exactly) 219 meters
1 centimeter (cm)----------	0.393 7 inch
1 chain (ch)---------- (Gunter's or surveyors)	66 <u>feet</u> (exactly) 20.116 8 meters
1 decimeter (dm)----------	3.937 inches
1 dekameter (dam)---------	32.808 feet
1 fathom----------	6 <u>feet</u> (exactly) 1.828 8 meters
1 foot (ft)----------	0.304 8 meter (exactly)
1 furlong (fur)----------	10 chains (surveyors) (exactly) 660 <u>feet</u> (exactly) 1/8 U.S. statute mile (exactly) 201.168 meters
[1 hand]----------	4 inches
1 inch (in)----------	2.54 centimeters (exactly)
1 kilometer (km)----------	0.621 mile
1 league (land)----------	3 U.S. statute miles (exactly) 4.828 kilometers
1 link (li) (Gunter's or surveyors)----------	0.66 <u>foot</u> (exactly) 0.201 168 meter
1 meter (m)----------	39.37 inches 1.094 yards
1 micrometer----------	0.001 millimeter (exactly) 0.000 039 37 inch
1 mil----------	0.001 inch (exactly) 0.025 4 millimeter (exactly)
1 mile (mi) (U.S. statute)[11] ---------	5280 <u>feet</u> survey (exactly) 1.609 kilometers
1 mile (mi) (international)----------	5280 feet international (exactly)
1 mile (mi)---------- (international nautical)[12]	1.852 kilometers (exactly) 1.151 survey miles

[10] The angstrom is basically defined as 10^{-10} meter.

[11] The term "statute mile" originated with Queen Elizabeth I who changed the definition of the mile from the Roman mile of 5000 feet to the statute mile of 5280 feet. The international mile and the U.S. statute mile differ by about 3 millimeters although both are defined as being equal to 5280 feet. The international mile is based on the international foot (0.3048 meter) whereas the U.S. statute mile is based on the survey foot (1200/3937 meter).

[12] The international nautical mile of 1 852 meters (6 076.115 49 feet) was adopted effective July 1, 1954, for use in the United States. The value formerly used in the United States was 6 080.20 feet = 1 nautical (geographical or sea) mile.

1 millimeter (mm)----------	0.039 37 inch
1 nanometer (mm)----------	0.001 micrometer (exactly) 0.000 000 039 37 inch
1 point (typography)----------	0.013 837 inch (exactly) 1/72 inch (approximately) 0.351 millimeter
1 rod (rd), pole, or perch----------	16 1/2 feet (exactly) 5.029 2 meters
1 yard (yd)----------	0.914 4 meter (exactly)

UNITS OF AREA

1 acre[13]----------	43 560 square feet (exactly) 0.405 hectare
1 are----------	119.599 square yards 0.025 acre
1 hectare----------	2.471 acres
[1 square (building)]----------	100 square feet
1 square centimeter (cm2)-------	0.155 square inch
1 square decimeter (dm^2)--------	15.500 square inches
1 square foot (ft^2)----------	929.030 square centimeters
1 square inch (in^2)----------	6.451 6 square centimeters (exactly)
1 square kilometer (km^2)--------	247.104 acres 0.386 square mile
1 square meter (m^2)----------	1.196 square yards 10.764 square feet
1 square mile (mi^2)----------	258.999 hectares
1 square millimeter (mm^2)------	0.002 square inch
1 square rod (rd^2),---------- sq pole, or sq perch	25.293 square meters
1 square yard (yd^2)----------	0.836 square meter

UNITS OF CAPACITY OR VOLUME

1 barrel (bbl), liquid----------	31 to 42 gallons[14]
1 barrel (bbl), standard for fruits,----- vegetables, and other dry commodities, except cranberries	7056 cubic inches 105 dry quarts 3.281 bushels, struck measure
1 barrel (bbl), standard,---------- cranberry	5 826 cubic inches 86 45/64 dry quarts 2.709 bushels, struck measure
1 bushel (bu) (U.S.)---------- struck measure	2150.42 cubic inches (exactly) 35.239 liters
[1 bushel, heaped (U.S.)]----------	2 747.715 cubic inches 1.278 bushels, struck measure[15]
[1 bushel (bu) (British Imperial)----- (struck measure)]	2219.36 cubic inches 1.032 U.S. bushels, struck measure
1 cord (cd) (firewood)----------	128 cubic feet (exactly)
1 cubic centimeter (cm^3)----------	0.061 cubic inch
1 cubic decimeter (dm^3)----------	61.024 cubic inches
1 cubic foot (ft^3)----------	7.481 gallons 28.316 cubic decimeters

[13] The question is often asked as to the length of a side of an acre of ground. An acre is a unit of area containing 43 560 square feet. It is not necessarily square, or even rectangular. But, if it is square, then the length of a side is equal to $\sqrt{43560\ \text{ft}^2} = 208.710\ \text{ft}$ (not exact)

[14] There are a variety of "barrels" established by law or usage. For example, Federal taxes on fermented liquors are based on a barrel of 31 gallons; many State laws fix the "barrel for liquids" as 31-1/2 gallons; one State fixes a 36-gallon barrel for cistern measurement; Federal law recognizes a 40-gallon barrel for "proof spirits"; by custom, 42 gallons comprise a barrel of crude oil or petroleum products for statistical purposes, and this equivalent is recognized "for liquids" by four States.

[15] Frequently recognized as 1-1/4 bushels, struck measure.

General Tables of Units of Measurement

1 cubic inch (in^3)----------	0.554 fluid ounce 4.433 fluid drams 16.387 cubic centimeters
1 cubic meter (m^3)----------	1.308 cubic yards
1 cubic yard (yd^3)----------	0.765 cubic meter
1 cup, measuring----------	8 fluid ounces (exactly) 237 milliliters 1/2 liquid pint (exactly)
1 dekaliter (daL)----------	2.642 gallons 1.135 pecks
1 dram, fluid (or liquid)---------- (fl dr or ƒ ʒ) (U.S.)	0.226 cubic inch 1/8 fluid ounce (exactly) 3.697 milliliters 1.041 British fluid drachms
[1 drachm, fluid (fl dr)]---------- (British)]	0.961 U.S. fluid dram 0.217 cubic inch 3.552 milliliters
1 gallon (gal) (U.S.)----------	231 cubic inches (exactly) 3.785 liters 0.833 British gallon 128 U.S. fluid ounces (exactly)
[1 gallon (gal) ---------- (British Imperial)]	277.42 cubic inches 1.201 U.S. gallons 4.546 liters 160 British fluid ounces (exactly)
1 gill (gi)----------	7.219 cubic inches 4 fluid ounces (exactly) 0.118 liter
1 hectoliter (hL)----------	26.418 gallons 2.838 bushels
1 liter (1 cubic decimeter---------- exactly)	1.057 liquid quarts 0.908 dry quart 61.025 cubic inches
1 milliliter (mL)----------	0.271 fluid dram 16.231 minims 0.061 cubic inch
1 ounce, fluid (or liquid)---------- (fl oz or ƒ ʒ) (U.S.)	1.805 cubic inches 29.573 milliliters 1.041 British fluid ounces
[1 ounce, fluid (fl oz)---------- (British)]	0.961 U.S. fluid ounce 1.734 cubic inches 28.412 milliliters
1 peck (pk)----------	8.810 liters
1 pint (pt), dry----------	33.600 cubic inches 0.551 liter
1 pint (pt), liquid----------	28.875 cubic inches (exactly) 0.473 liter
1 quart (qt), dry (U.S.)----------	67.201 cubic inches 1.101 liters 0.969 British quart
1 quart (qt), liquid (U.S.)----------	57.75 cubic inches (exactly) 0.946 liter 0.833 British quart
[1 quart (qt) (British)]----------	69.354 cubic inches 1.032 U.S. dry quarts 1.201 U.S. liquid quarts
1 tablespoon, measuring----------	3 teaspoons (exactly) 15 milliliters 4 fluid drams 1/2 fluid ounce (exactly)
1 teaspoon, measuring----------	1/3 tablespoon (exactly) 5 milliliters 1-1/3 fluid drams[16]
1 water ton (English)----------	270.91 U.S. gallons 224 British Imperial gallons (exactly)

[16] The equivalent "1 teaspoon = 1-1/3 fluid drams" has been found by the Bureau to correspond more closely with the actual capacities of "measuring" and silver teaspoons than the equivalent "1 teaspoon = 1 fluid dram," which is given by a number of dictionaries.

UNITS OF MASS

1 assay ton[17] (AT)	29.167 grams
1 carat (c)	200 milligrams (exactly) 3.086 grains
1 dram apothecaries (dr ap or ℥)	60 grains (exactly) 3.888 grams
1 dram avoirdupois) (dr avdp)	27-11/32 (= 27.344) grains 1.777 grams
1 gamma (γ)	1 microgram (exactly)
1 grain	64.798 91 milligrams (exactly)
1 gram (g)	15.432 grains 0.035 ounce, avoirdupois
1 hundredweight, gross or long[18] (gross cwt)	112 pounds (exactly) 50.802 kilograms
1 hundredweight, gross or short (cwt or net cwt)	100 pounds (exactly) 45.359 kilograms
1 kilogram (kg)	2.205 pounds
1 microgram (µg) [the Greek letter mu in combination with the letter g]	0.000 001 gram (exactly)
1 milligram (mg)	0.015 grain.
1 ounce, avoirdupois (oz avdp)	437.5 grains (exactly) 0.911 troy or apothecaries ounce 28.350 grams
1 ounce, troy or apothecaries (oz t or oz ap or ℥)	480 grains (exactly) 1.097 avoirdupois ounces 31.103 grams
1 pennyweight (dwt)	1.555 grams
1 point	0.01 carat 2 milligrams
1 pound, avoirdupois (lb avdp)	7000 grains (exactly) 1.215 troy or apothecaries pounds 453.592 37 grams (exactly)
1 pound, troy or apothecaries (lb t or lb ap)	5760 grains (exactly) 0.823 avoirdupois pound 373.242 grams
1 scruple (s ap or ℈)	20 grains (exactly) 1.296 grams
1 ton, gross or long[19]	2240 pounds (exactly) 1.12 net tons (exactly) 1.016 metric tons
1 ton, metric (t)	2204.623 pounds 0.984 gross ton 1.102 net tons
1 ton, net or short	2000 pounds (exactly) 0.893 gross ton 0.907 metric ton

[17] Used in assaying. The assay ton bears the same relation to the milligram that a ton of 2000 pounds avoirdupois bears to the ounce troy; hence the mass in milligrams of precious metal obtained from one assay ton of ore gives directly the number of troy ounces to the net ton.

[18] The gross or long ton and hundredweight are used commercially in the United States to only a very limited extent, usually in restricted industrial fields. The units are the same as the British “ton” and “hundredweight.”

[19] The gross or long ton and hundredweight are used commercially in the United States to a limited extent only, usually in restricted industrial fields. These units are the same as the British “ton” and “hundredweight.”

[THIS PAGE LEFT INTENTIONALLY BLANK]

Chapter 2. Special Equipment

Article 1. Compressed Gas In Cylinders

4050. Application. This code applies to refillable cylinders used as dispensing industrial, domestic and medicinal gases. Compressed gas shall include liquefied as well as nonliquefied gases. The requirements are not in lieu of those of other codes under which a cylinder was constructed, but may be in addition thereto. The code does not apply to cylinders filled for and in the presence of a customer.

NOTE: Authority cited: Sections 12027 and 12107, Business and Professions Code. Reference: Section 12107, Business and Professions Code.

4051. Cylinder Labeling.

(a) Tare Weight. Cylinders used for the sale of gases by weight or that are filled by weight which in turn is converted to volume shall meet the following conditions:

(1) Cylinders shall have the tare weight legibly stamped on the cylinder.

(2) All tare weight values required in this article shall be preceded with the letters "T.W." or the words "Tare Weight."

(3) The tare weight shall include the weight of the cylinder, the valve and other permanent attachments. The weight of the protective cap shall not be included in either the tare or the gross weight.

(b) Actual Tare Weight. When acetylene cylinders are filled but are not acetoned to the stenciled tare weight, the actual tare weight must be shown on the tag with the net contents statement.

(c) Net Contents. The net contents must be expressed in terms of cubic feet, or pounds and ounces, or units of the metric system.

(d) Identity. The identity of the product must be shown.

(e) Name and Address. The name, address and zip code for the responsible company must be shown on cylinder.

(f) Liquefied Petroleum Gas Cylinder Contents. Cylinders or bottles which are prefilled with liquefied petroleum gas prior to sale, shall be labeled with the weight of the contents.

NOTE: Authority cited: Sections 12027 and 12107, Business and Professions Code. Reference: Section 12107, Business and Professions Code.

4052. Notes.

N.1. The specific volume of acetylene gas at one atmosphere and at the temperature of 70°F shall be 14.7 cubic feet per pound.

N.2. Verification of net quantity statements for cylinders of argon, helium, hydrogen, nitrogen and oxygen shall be in accordance with the Tables of Industrial Gas Container Contents and Density for Oxygen, Argon, Nitrogen, Helium and Hydrogen listed on National Bureau of Standards Technical Note issued in June 1985 and incorporated herein by reference.

N.3. Allowable Difference. If the stamped or stenciled tare is used to determine the net contents of the cylinder, the allowable difference between the actual tare weight and the stamped (or stenciled) tare weight, or the tare weight on a tag attached to the cylinder, for a new or used cylinder shall be:

(1) 1/2 percent for tare weights of 20 lb, or less or

(2) 1/4 percent for tare weights of more than 20 lb.

Average Requirements. When used to determine the net contents of cylinders, the stamped or stenciled tare weights of cylinders at a single place of business found to be in error predominately in a direction favorable to the seller and near the allowable difference limit shall be considered to not be in conformance with these requirements.

NOTE: Authority cited: Sections 12027 and 12107, Business and Professions Code. Reference: Section 12107, Business and Professions Code.

4053. Definitions.

Cubic Foot. A standard cubic foot of gas which at a temperature of 70 °F and a pressure of 14.696 pounds per square inch absolute occupies one cubic foot.

NOTE: Authority cited: Sections 12027 and 12107, Business and Professions Code. Reference: Section 12107, Business and Professions Code.

[THIS PAGE LEFT INTENTIONALLY BLANK]

Article 2. Procedures for Type Approval Certification Evaluation and Field Compliance Testing of Vapor Recovery Systems

4054. A. Application.

A.1. Vapor Recovery Systems. This code applies to Stage II vapor recovery systems designed to control motor vehicle fuel vapors which result from fueling operations pursuant to Sections 41954, 41956, and 41956.1 of the Health and Safety Code. This code establishes regulations to govern some design characteristics of those systems and their operation to ensure liquid recirculation is prevented.

A.1.1. Balance System. The balance vapor recovery system utilizes fuel delivery nozzles with a bellows and face plate designed to make an "intended tight seal" with the vehicle fill pipe opening. Liquid filling a fuel tank displaces the existing vapor space creating a positive pressure in the tank. That higher pressure achieves equilibrium with the supply tank's vapor pressure through the vapor return line making the system "balanced".

A.1.2. Assist System. Assist vapor recovery systems may utilize more than one type of fuel delivery nozzle. One has a bellows and face plate designed to make a "non-intended tight seal" with the vehicle fill pipe opening. Another has no bellows, uses a coaxial metal fill spout with perforations in the outer tube to remove vapors, and allows visual observation of the fill pipe opening. These systems employ a mechanism to create vacuum which "evacuates" displaced vehicle fuel tank vapors by a negative pressure in the vapor return line.

A.2. Responsibility of Director and Manufacturer.

A.2.1. Director. As specified in subsection A.1., a system submitted for type approval certification shall be evaluated by the Director applying the procedures established in this article plus any additional tests he determines necessary to assure compliance of the system with the specifications and performance requirements contained herein.

A.2.2. Manufacturer. Prior to type approval certification testing, the applicant shall submit information to the Director pertaining to the design of a system, including schematics, blueprints, instruction manuals, brochures, components, and all other information necessary for preliminary review. If defects are found in the design, manufacture, service, repair, or any other characteristic of the system, the Director may permit the applicant to modify and resubmit the system for further review. After successful completion of preliminary review, the applicant shall be authorized to install its system of a specified number of components in a prescribed location for use in the type approval certification testing.

A.3. Procedure. The Secretary shall, in cooperation with the county sealer of weights and measures for the designated location, observe and examine the system in operation normally within 30 to 90 days. One or more examinations shall be conducted during the prescribed test period to determine compliance with Sections 4054.1 and 4054.2 which relate to specifications, performance, and accuracy. If, during or at the conclusion of any examination, the system fails to maintain reliability and accuracy within the tolerances specified in the submission for type approval certification, the Secretary shall so advise the applicant and may refuse further testing unless the defects are corrected. However, type approval certification shall not be issued until the applicant, following successful Division of Measurement Standards field tests, submits a report of evaluation by an independent testing laboratory as specified in Section 4054.2., N.6.

A.5. General Code Application. Except for those sections in Section 4001 annotated "Not Adopted", the general code requirements for weighing and measuring devices specified in Section 4000 (Handbook 44, Section 1.10) shall also apply.

NOTE: Authority cited: Sections 12107 and 12500.5, Business and Professions Code; and Sections 41956(a) and 41956(c), Health and Safety Code. Reference: Sections 12107 and 12500.5, Business and Professions Code; and Sections 41956(a) and 41956(c), Health and Safety Code.

4054.1. S. Specifications.

S.1. Systems Components. Systems governed by this article utilizing motor vehicle fuel nozzles shall contain in each nozzle adequate and automatic means to prevent measured liquid from either recirculating (entering the vapor return line) or over-flowing a vehicle fill pipe opening.

S.1.1. Nozzles.

(a) All nozzle types shall have a primary shut-off device which automatically activates when liquid covers the nozzle primary shut-off sensing mechanism.

(b) Balance type nozzles shall have a secondary shut-off device or other effective means to prevent liquid recirculation. Secondary shut-off devices shall automatically activate after liquid has entered the vapor return line because the primary shut-off device has failed. (Typically, secondary shut-off devices are pressure-activated and shut off when liquid in the vapor return line blocks the return of vapors).

(c) Assist type nozzles may have a secondary shut-off device or else some other effective means to avoid liquid overflowing a vehicle fuel tank because the primary shut-off device has failed. "Other effective means" include, but are not limited to, permitting liquid to be seen either by observing the fill pipe opening or hearing and seeing liquid overflow spillage.

S.2. Field Compliance Test Unit.

S.2.1. Use. The field compliance test unit shall be used to examine the proper operation of:

(a) primary shut-off devices,

(b) secondary shut-off devices, and

(c) inches of H_2O column vacuum for assist systems.

S.2.2. Design.

S.2.2.1. Tank. The test unit shall be a rigid metal vessel 13-inches high and 9-inches in diameter with a liquid capacity of 3 gallons (all measurements approximate). A commercial-sized, 30 pound Freon recharging tank is typically used.

S.2.2.2. Base Support/Stand. The test unit may be supported either:

(a) on a metal base 3/16-inch thick, 6-inches wide, and 17-1/2 inches long (all measurements approximate) or,

(b) by a stand which elevates the test unit to accommodate a bottom-inserted 3/4 inch ball valve for emptying purposes.

S.2.2.3. Fuel Fill Pipe. The test unit shall have a metal fuel fill pipe welded to the tank at a 45 degree angle from horizontal. Placement of the fill pipe is critical. It shall enter the test unit at the middle of the curvature between the top and sides of the vessel so that a specified ullage (vapor space) is created. The fill pipe shall have no internal vent, shall be 2-1/4 inch outside diameter and 10 inches long (both measurements approximate), and shall extend inside the tank no more than 1/4 inch. A longitudinal part of the fill pipe near its fill opening shall be cut away in order to observe that the nozzle primary shut-off device sensing mechanism is immersed in liquid. The cut-away is approximately 5 inches long to a depth of 1/2 the pipe's diameter. The fill pipe shall have transparent flexible tubing slipped over its entire length. The fill opening shall be modified to accommodate nozzle spouts at least 15/16 inch outside diameter (leaded fuel). The test unit shall be airtight when the fill pipe opening is sealed.

S.2.2.4. Other Equipment. A rigid, transparent plastic tube approximately 12 inches long and 3-7/8 inches inside diameter shall be installed around the fill pipe to contain liquid overflow. A 5/16-inch valve with an outlet to attach a hose shall be installed at the top center of the vessel for obtaining pressure readings. Handles for carrying and emptying the test unit may be attached. All metal parts of the test unit shall be electrically bonded together. Refer to the test unit illustrations in Figure 1.

S.3. Assist System Inches of H_2O Column Vacuum. Assist vapor recovery systems with booted nozzle spouts that can form a closed seal around the vehicle filler neck shall be designed to operate at not more than -10 inches H_2O column vacuum as measured at the nozzle or test unit during a delivery typical of customer usage.

NOTE: Authority cited: Sections 12107 and 12500.5, Business and Professions Code; and Sections 41956(a) and 41956(c), Health and Safety Code. Reference: Sections 12107 and 12500.5, Business and Professions Code; and Sections 41956(a) and 41956(c), Health and Safety Code.

4054.2. N. Notes - Type Approval Certification Evaluation.

N.1. System Installation. A minimum of 6 nozzles shall be installed in a test location for evaluation purposes. Hoses shall be selected to anticipate maximum customer usage and efficient observer interaction. The test nozzles shall not fail to operate as designed for the duration of the evaluation.

N.2. Dispenser Measurement Accuracy. Prior to the field examination of a vapor recovery system, the dispenser meters for the test nozzles shall be tested and adjusted, if necessary, to be within maintenance tolerance.

N.3. Performance Accuracy - Primary and Secondary Shut-off Devices.

N.3.1. Test Method. Examination of the test nozzles shall be performed with a field compliance test unit as specified in subsection S.2.

NOTE: Two or more test units will expedite the examination significantly.

N.3.1.1. Test Procedure - Primary Shut-Off Device.

N.3.1.1.1. Initial Test. Dispense fuel into the test unit with each nozzle. All nozzles shall shut off automatically at any delivery flow rate as the test unit becomes full as specified in subsection S.1.1.(a).

N.3.1.1.2. Override Test. After the initial primary shut-off device activates, dispense enough additional fuel into the test unit to immerse the nozzle primary shut-off sensing mechanism in liquid. Record the dispenser indicator gallons. Make 10 additional consecutive override attempts duplicating a range of customer usage and record the new indicated gallons. All 10 attempts shall result in automatic nozzle shut-off before the dispenser volume indicator increases more than the 1/10 gallon limit as specified in subsection T.1.1. The 10 override attempts shall be performed on a minimum of 6 nozzles, each tested a minimum of 3 times during this examination.

N.3.1.2. Test Procedures - Secondary Shut-Off Device (if equipped). Introduce sufficient fuel into the vapor return line (approximately 1/10 gallon or 375 milliliter) to block the return of vapors through the line. Hold in place a "U-shaped" configuration of the fuel discharge hose at a level lower than the nozzle to concentrate the liquid. Make a minimum of 10 attempts to dispense fuel into an empty test unit. Record the dispenser indicator gallons before and after each attempt. (Balance-type nozzles must make their intended tight seal at the fill pipe opening.) The nozzle shall shut off automatically before the dispenser volume indicator increases more than the 3/10 gallon limit for each attempt as specified in subsection T.1.2. This procedure shall be performed on a minimum of 6 nozzles.

NOTES: (1) The test unit must be empty initially to insure liquid does NOT interact with the primary shut-off device sensing mechanism. (2) For some hose configurations, introducing additional fuel into the vapor return line during the test procedure may be necessary. Introduced liquid can be returned to storage by building vapor line pressure produced by this procedure.

N.4. Delivery Accuracy - 150 Vehicle Test.

N.4.1. Test Method. Compliance with delivery accuracy requirements shall be based upon data recorded for at least 150 vehicles while observing customers fueling (self-serve) with the test nozzles under normal field conditions.

N.4.2. Test Procedure. Install a transparent trap, or other suitable means, between each nozzle and dispenser outlet connection for the hose. Any liquid entering a vapor return line will be collected while observing the fueling operations. Then after each fueling, the liquid shall be drained into the trap, removed, and measured. Trap placement and observer actions shall produce the least possible interference with normal operations at the test location.

The liquid collected from both one individual delivery and the total of all individual deliveries shall not exceed the tolerances as specified in subsections T.3.(a) and T.3.(b), respectively.

The 150 or more vehicles shall be representative of California vehicles, including various sizes of passenger vehicles, vans, and trucks. This examination shall include varied fuel delivery rates and nozzle orientations plus complete and partial fills. The system may be retested if the Director by his own initiative, or at the request of the applicant, determines the test was not representative of field conditions.

N.5. Performance Accuracy - Assist System Evaporation and Volume Change.

N.5.1. Test Method. An appropriate means (manometer, column gauge, etc.) shall be used to determine the inches of H_2O column vacuum for nozzles where the spout is booted and can form a closed seal around the vehicle filler neck. Excessive vacuum may result in artificial evaporation of customer fuel which would decrease the measured volume and also cause possible implosion of vehicle fuel tanks.

N.5.2. Test Procedure. Install the vacuum indicator at the nozzle or test unit. Record the value of the reading while the system is operating in a normal manner to determine if it is functioning within the -10 inches H_20 column vacuum limit as specified in subsection T.2.

N.6. Independent Laboratory Evaluation. Pursuant to Section 41958 of the Health and Safety Code, type approval certification regarding recirculation shall include evaluations by Underwriters Laboratories (U.L.) or a similar independent laboratory selected by the Secretary. Reports required by other State agencies may be used to determine compliance with this section. The laboratory evaluation shall determine, but is not limited to, proper secondary shut-off device operation for nozzles where the spout is booted and can form a closed seal around the vehicle filler neck with the primary shut-off device inoperable.

NOTE: Authority cited: Sections 12107 and 12500.5, Business and Professions Code; and Sections 41956(a) and 41956(c), Health and Safety Code. Reference: Sections 12107 and 12500.5, Business and Professions Code; and Sections 41956(a) and 41956(c), Health and Safety Code.

4054.3. T. Tolerances.

T.1. Performance Accuracy - Primary and Secondary Shut-Off Devices.

T.1.1. Primary Shut-Off Device Overrides. The required, additional attempts, in total, to override any nozzle primary shut-off device shall not increase the dispenser volume indication by more than 1/10 gallon.

T.1.2. Secondary Shut-Off Device. With the vapor return line blocked by fuel (simulating recirculation due to primary shut-off device failure), each attempt to dispense fuel shall result in automatic nozzle shut off before the dispenser volume indication increases more than 3/10 gallon.

T.2. Assist System Inches of H_20 Column Vacuum. Assist vapor recovery systems shall operate at the inches of H_20 column vacuum recommended by the manufacturer, but shall not exceed -10 inches of H_20 column vacuum for nozzles where the spout is booted and can form a closed seal around the vehicle filler neck.

T.3. Delivery Accuracy - 150 Vehicle Test. The quantity of measured liquid collected in the vapor return line/lines shall not exceed both:

(a) 0.2 percent of any one individual vehicle fuel delivery, and

(b) 0.02 percent of the sum of the fuel deliveries to all vehicles observed (150 or more) during the delivery accuracy tests.

NOTE: Authority cited: Sections 12107 and 12500.5, Business and Professions Code; and Sections 41956(a) and 41956(c), Health and Safety Code. Reference: Sections 12107 and 12500.5, Business and Professions Code; and Sections 41956(a) and 41956(c), Health and Safety Code.

4055. N. Notes
Field Compliance Testing

N.1. Test Methods - Primary and Secondary Shut-Off Devices. Examination of primary and secondary shut-off devices to determine the acceptability of an individual nozzle shall be performed using motor vehicles with fuel tanks and fill pipes representative of California vehicles and/or a field compliance test unit as specified in subsection S.2.

N.2. Test Procedure - Primary and Secondary Shut-Off Devices.

N.2.1. Initial Test - Primary Shut-Off Device. Dispense fuel into the fill pipe opening of a vehicle fuel tank or test unit in accordance with the instructions for the vapor recovery device, if any, and common public usage. The nozzle shall shut off automatically when the nozzle primary shut-off sensing mechanism is covered by the liquid. Automatic nozzle shut-off shall occur with the dispenser operating at discharge rates both greater than and equal to the minimum rate allowed by the slowest hold-open clip setting, if any, or 3 gallons per minute, whichever is less.

N.2.2. Override Test - Primary Shut-Off Device. After the initial primary shut-off device activates, dispense enough additional fuel into the test unit to immerse the nozzle primary shut-off sensing mechanism in liquid. Record the dispenser indicator gallons. Make 6 additional, consecutive override attempts duplicating a full range of potential customer usage and record the new indicated gallons. All 6 attempts shall result in automatic nozzle shut-off before the dispenser volume indicator increases more than the 1/10 gallon limit as specified in subsection T.1.1.

NOTE: A test unit must be used for this procedure so the primary shut-off device sensing mechanism can be seen immersed in liquid.

N.2.3. Secondary Shut-Off Device (if equipped). Introduce sufficient fuel into the vapor return line (approximately 1/10 gallon or 375 milliliter) to block the return of vapors through the line. Hold in place a "U-shaped" configuration of the fuel discharge hose at a level lower than the nozzle to concentrate the liquid. Make one or more attempts to dispense fuel into an empty test unit or vehicle fuel tank that is within 3 gallons of being full, including the fill pipe. (Balance-type nozzles must make their intended tight seal at the fill pipe opening.) The nozzles shall shut off automatically before the dispenser volume indicator increases more than the 3/10 gallon limit for each attempt as specified in subsection T.1.2.

N.3. Assist Systems. To test assist systems for proper operation at the specified inches of H_20 column vacuum, refer to Section 4054.2, N.5.

NOTE: Authority cited: Sections 12107 and 12500.5, Business and Professions Code; and Sections 41956(a), 41956(c) and 41956.1(c), Health and Safety Code. Reference: Sections 12107 and 12500.5, Business and Professions Code; and Sections 41956(a) and 41956(c), Health and Safety Code.

FIELD COMPLIANCE TEST UNIT

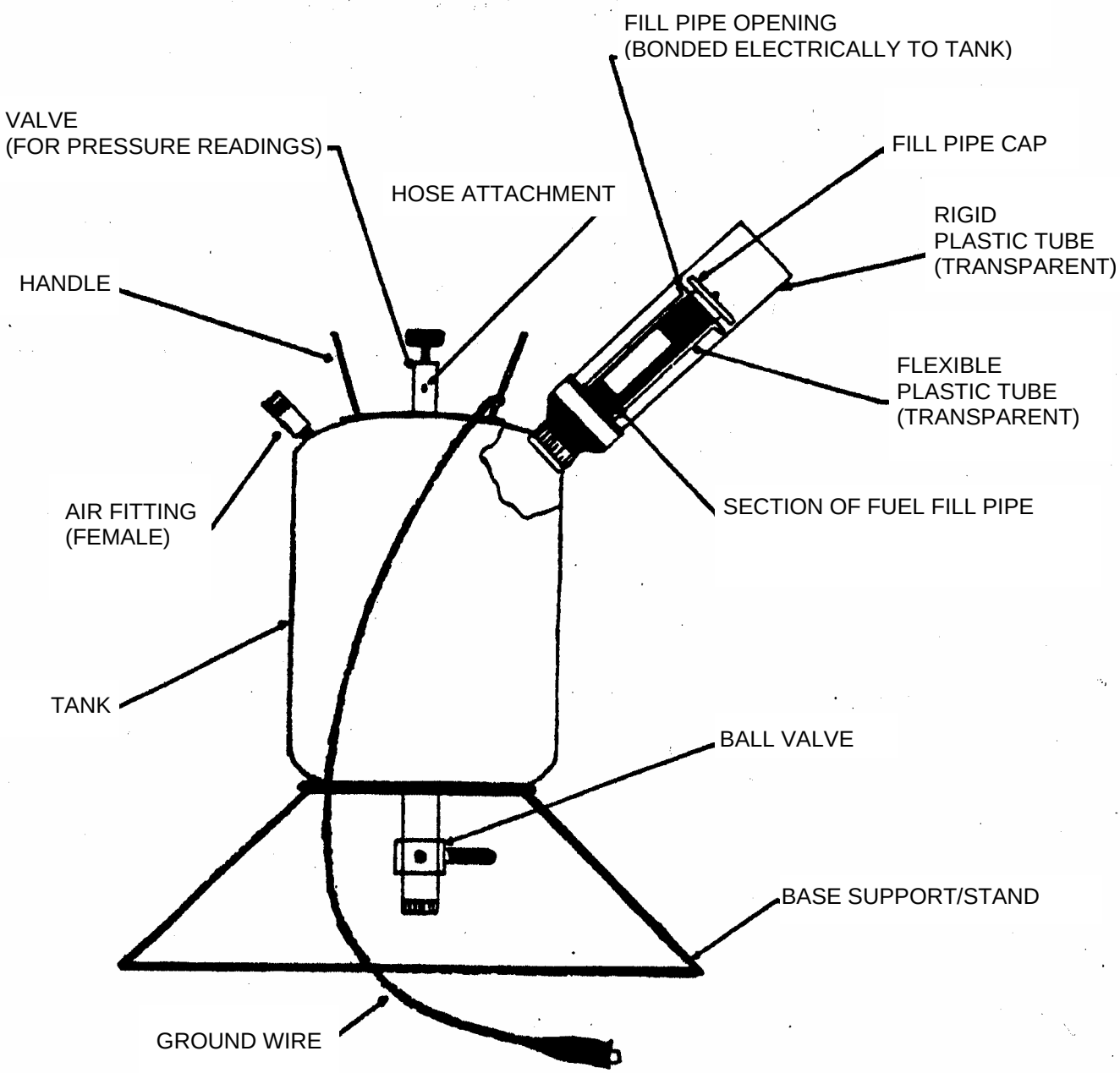

[THIS PAGE LEFT INTENTIONALLY BLANK]

Chapter 3. Device Inspection

Article 1. Frequency of Inspection

4070. Frequency of Inspection. The frequency of inspection for weighing and measuring devices used for commercial and law enforcement purposes is established as in Table 1. The specified times are maximum times between tests. More frequent tests may be conducted if requested by the device user in a complaint investigation or on the initiative of a weights and measures official. The definitions of specific device classifications are as in Chapter 1.

NOTE: Authority cited: Sections 12027 and 12212, Business and Professions Code. Reference: Section 12212, Business and Professions Code.

TABLE 1. FREQUENCY OF INSPECTION

			INSPECTION FREQUENCY		
DEVICE	Article	Section	Initial Only	Annual	Other
MEASURES					
Dry	1	4.45	X		
Glass Graduates	1	4.44	X		
Linear	1	5.52			Original Plus Annual Visual
Liquid	1	4.41		X	
MEASURING DEVICES					
Cryogenic	1	3.34		X	
Electric Watt-Hour	2.2				10 Years
Fabric	1	5.50		X	
Lubricant	1	3.30		X	
Hydrocarbon Vapor	1	3.33			10 Years
LPG Liquid	1	3.32		X	
Moisture	1	5.56		X	
Odometers	1	5.53		X	
Retail Meters	1	3.30		X	
Taximeters	1	5.54		X	
Vehicle Tank Meters	1	3.31		X	
Water (Domestic Service)	1	3.36			10 Years
Water (All Other)	1	3.36		X	
Wholesale Meters	1	3.30		X	
Wire and Cordage	1	5.51		X	
SCALES					
Animal	1	2.20		X	
Automatic Bulk Weighing System for Grain	1	2.22		X	
Belt Conveyors	1	2.21		X	
Computing	1	2.20		X	
Counter	1	2.20		X	
Crane	1	2.20		X	
Dormant	1	2.20		X	
Hopper and Tank	1	2.20		X	
Livestock	1	2.20		X	
Meat Beam, Steelyard	1	2.20		X	
Monorail	1	2.20		X	
Portable Platform	1	2.20		X	
Prescription	1	2.20			2 Years
Railway Track	1	2.20		X	
Spring	1	2.20		X	
Vehicle	1	2.20		X	
TANKS OR COMPARTMENTS					
Liquid Gauged	1	4.40	X		
Dry, Measured	1	4.40	X		
Farm Milk Tanks	1	4.42			Original Plus Annual Visual

Article 2. Alternatives to Specified Frequency of Inspection

4071. Purpose of Article. This article authorizes county sealers or directors of weights and measures, upon approval of the Director, to use plans for inspection of weighing and measuring devices other than those stated in Article 1 of this chapter. A portion of the sealer's resources will thus be made available for other weights and measures enforcement work which the Director finds to be necessary.

Upon granting such approval, the Director will instruct the sealer or director to perform such alternative work.

NOTE: Authority cited: Sections 12027 and 12212, Business and Professions Code. Reference: Section 12212, Business and Professions Code.

4072. Findings. The Director finds (1) that the minimum frequency of inspection required by Article 1 should be modified in some counties because of evidence of satisfactory and continuing accuracy of certain weighing and measuring devices; (2) there is an increasing need to perform additional end result type inspections; and (3) that the performance of other enforcement work will assist the sealer in providing to consumers and commerce the services and protection required to be provided by the Business and Professions Code.

NOTE: Authority cited: Sections 12027 and 12212, Business and Professions Code. Reference: Section 12212, Business and Professions Code.

4073. Approval of County Plans. County plans will be approved in writing by the Director upon request and compliance with adequate requirements.

NOTE: Authority cited: Sections 12027 and 12212, Business and Professions Code. Reference: Section 12212, Business and Professions Code.

4074. Instructions to Sealers.

(a) Frequency of Inspection. The county sealer or director of each county desiring to participate in this program shall prepare a plan of inspection for devices and submit to the Director for approval. The plan shall provide that all commercial devices shall be tested either on a regular frequency, a variable frequency, or on the basis of a statistical sampling procedure. The sealer shall initiate variable frequency or statistical sampling plans upon approval of the Director and submit to the Director such reports as he may require concerning the operation of the plan and the level of consumer protection provided. The Director may withdraw his approval and require modification or termination of the plan when he determines it is necessary for the purpose of this chapter.

(b) Alternative Programs.

(1) The additional resources made available to the sealers shall be used in the following weights and measures programs:

(A) Consumer commodities and package inspection.

(B) Accuracy of retail delivery of weighed, measured and counted commodities.

(C) Educational activities related to weights and measures enforcement.

(2) Unless otherwise designated by the Director, the sealer shall apportion the resources used in such alternative programs in his discretion to best accomplish the purpose of this chapter.

NOTE: Authority cited: Sections 12027 and 12212, Business and Professions Code. Reference: Section 12212, Business and Professions Code.

CHAPTER 4. REGISTRATION OF SERVICE AGENCIES FOR COMMERCIAL WEIGHING AND MEASURING DEVICES

4080. Application. This chapter applies to any person performing duties as a service agency or service agent.

NOTE: Authority cited: Section 12027, Business and Professions Code. Reference: Section 12531, Business and Professions Code.

4081. Registration of Service Agencies and Service Agents Required.

(a) Each service agency shall forward to the Department, with the appropriate registration fee (Business and Professions Code Section 12535), the name and license number of a service agent within 30 days of hiring by the service agency.

(b) The registration of a service agent shall expire upon termination of employment with the service agency.

(c) Each service agency shall notify the Department within 30 days of the termination of a service agent.

NOTE: Authority cited: Section 12027, Business and Professions Code. Reference: Sections 12531 and 12532, Business and Professions Code.

4082. Fees.

(a) Any fee not paid when due, or sent by mail and post-marked five days or more after the due date, is overdue.

(b) To any fee that is overdue and paid within 30 days of the due date, a penalty equal to 30 percent of the amount of the original fee shall be added.

(c) To any fee paid more than 30 days after the due date, a penalty equal to 50 percent of the amount of the original fee shall be added.

NOTE: Authority cited: Section 12027, Business and Professions Code. Reference: Section 12535, Business and Professions Code.

4083. Examinations/Licenses.

(a) **License Application:** Applicants for a service agent license must provide their name, address, and proof of identity by means of a picture identification. At the time of examination, applicants shall pay an examination fee of $35. Applicants renewing an existing license shall also provide the current license number.

(b) **Examination Procedure:** Written examinations will be administered by a county weights and measures office or the Division of Measurement Standards. The examination shall be administered according to instructions issued by the Division of Measurement Standards "Administration of Service Agent Examination" (Est. 8/00), which is incorporated by reference. Applicants will be advised of the results on the day of the examination. The proctor and applicant shall certify under penalty of perjury that the examination was given in accordance with the procedures specified.

(c) **Qualification for a License:** An applicant must receive a minimum score of 70 percent to qualify for a service agent license. Successful applicants will be provided with a service agent license at that time. Except as provided for in subsection (g), such license shall be valid for a period of five years from date of issue.

(d) **Retention and Notification:** Examination information will be retained in the county or state office where administered for a period of five years. County offices will provide to the Division of Measurement Standards within 30 days the names of individuals to whom service agent licenses have been issued.

(e) **Failure and Reexamination:** Applicants failing to receive a passing score may schedule an appointment to be reexamined. The fee specified in subsection (a) shall be paid each time the examination is taken. Reexaminations are subject to all the above conditions.

(f) **Replacement License:** A lost or mutilated license may only be replaced by the Division of Measurement Standards. Before a replacement license is issued, the licensee must provide a written request including the following information: the name as it appeared on the original license, the licensee's signature and current address, and a fee of $10. If a licensee satisfies these requirements, a replacement license will be issued.

(g) **License Renewal:** To maintain a service agent license, applicants may take the examination on or up to 90 days before the expiration date of their current license. Successful applicants will receive a five year extension of the license period.

NOTE: Authority cited: Section 12027, Business and Professions Code. Reference: Section 12540, Business and Professions Code.

4084. Authority for Service Agency to Place a Device into Service. Pursuant to Business and Professions Code Sections 12509 and 12532(d), a service agency may perform any of the following:

(a) place a correct device into service,

(b) remove an "out-of-order" notice to perform the service, and must replace the notice if the device can not be corrected, or

(c) remove an "out-of-order" notice from a corrected device and place it into service.

NOTE: Authority cited: Sections 12027, 12532(b) and 12509, Business and Professions Code. Reference: Sections 12531 and 12532, Business and Professions Code.

4085. Responsibility of a Service Agency.

(a) Each service agency shall be responsible for compliance with the following:

(1) **Repairing or Placing Devices into Service.** - Each service agency shall place into service, upon installation or following repair, a device in such a manner that it meets all the requirements of Division 5 of the California Business and Professions Code and all the requirements of the California Code of Regulations, Title 4, Division 9. Weighing or measuring devices which are not "correct", as defined by Section 12500(c) of the Business and Professions Code, shall not be placed into service.

(2) **Notice to County Sealer of Repairing or Placing of Device into Service by Service Agency. -** Each service agency shall notify the county sealer of the repairing or placing in service of any device. The notice shall be in writing, and transmitted to the county sealer within the 24-hour period following the repair, except as provided by Business and Professions Code Section 12515(b).

The notification shall include the following minimum identifying information;

(i) Name and address of service agency.
(ii) Location of device(s). Name and address, including if available the unique identifier used by the business (e.g., pump or checkstand number).
(iii) Name of service agent.
(iv) Date of adjustment, repair, placing, or replacing into service.
(v) Name of device manufacturer(s).
(vi) Model designation(s) and serial number(s) of the device(s).
(vii) On new installations, the National Institute of Standards and Technology or National Conference on Weights and Measures Certificate of Conformance number(s) for each separately approved component or device, if marked on the component or device.

(3) **Security Seal.** - Service agents shall replace a security seal on any adjustment mechanism where the seal was required to be removed for service, repair, or installation. Before placing a device into service, service agents shall install a security seal on any adjustment mechanism designed to be sealed.

(4) **Identification of Service Agency Work. -** Service agents shall identify their work on each device by applying an adhesive tag or label in a conspicuous location on the device. The adhesive tag or label shall show the name, registration number and business telephone number of the service agency, the license number of the service agent performing the work, and the date. Any security seal required pursuant to Section 12107 of the California Business and Professions Code shall show the registration number of the service agency and the year the security seal was placed on the device.

(5) **Certificate of Accuracy of Standards.** - A service agency shall, on request from a sealer, show a copy of the certification of accuracy for the standards used to place a device into service.

NOTE: Authority cited: Sections 12027 and 12107, Business and Professions Code. Reference: Sections 12515(a), 12531, 12532(h) and 12533, Business and Professions Code.

4086. Certification of Service Agency Standards. Each service agency shall have its standards certified at the service agency's expense. Standards shall be tested and certified by either the Department or other metrology laboratories traceable to the National Institute of Standards and Technology (NIST). These laboratories include those in county weights and measures programs, industry, and other states that have been approved, certified, or accredited by NIST, or the Department in accordance with criteria established by NIST, or by other appropriate national or international accrediting organizations. The standards shall be certified as often as the Department deems necessary, based upon a review of supporting statistical data resulting from previous certifications, but in no event shall the period of time between certifications exceed 10 years. In the absence of supporting statistical data, standards shall be certified at least every two years.

NOTE: Authority cited: Sections 12027 and 12314, Business and Professions Code. Reference: Sections 12531(e), 12533 (a)(1), 12533(a)(2) and 12534, Business and Professions Code.

4087. Payments to Counties. Payment to counties shall be subject to the following conditions:

(a) Each county shall report annually, before November 1, expenditures for the prior fiscal year, which shall be the period from July 1 through June 30.

(b) The county report, which shall be subject to audit, shall be submitted on form number 40-008A "County Annual Report" (Rev. 8/00), which is incorporated by reference.

(c) Any county not submitting a report by the prescribed date may be excluded from payment for that year.

(d) Payment for each fiscal year shall be based on the registration fees received for the same fiscal year.

(e) Payments to counties, based on expenditures which occurred during the previous fiscal year, will be made on or about January 31 of each year.

NOTE: Authority cited: Sections 12027 and 12537, Business and Professions Code. Reference: Sections 12209(c) and 12537, Business and Professions Code.

4088. Advisory Committee.

(a) Members of the Committee shall receive no compensation, but are entitled to payment of necessary traveling expenses in accordance with State Administrative Manual Section 0774 (Rev. 9/91) and the rules of the Department of Personnel Administration.

(b) The Committee shall be advisory to the Department and may make recommendations on all matters pertaining to service agencies and/or service agents.

(c) The Committee shall elect a chairman and other officers as it deems advisable.

(d) The Committee shall meet at the call of the chairman or the Department, or at the request of any four members of the Committee. The Committee shall meet at least once a year.

(e) A quorum shall consist of five members. A vote of the majority of the members present at a meeting at which there is a quorum shall constitute an act of the Committee.

NOTE: Authority cited: Sections 12027 and 12541(a), Business and Professions Code; Government Code 19815.4(d). Reference: Section 12541(a)(d), Business and Professions Code.

[THIS PAGE LEFT INTENTIONALLY BLANK]

CHAPTER 5. BILLING FOR UTILITY SERVICES

4090. Billing for Utility Service.

Application. This section applies to operators who provide utility service(s) to customers through commercial weighing or measuring devices.

Definition. Utility service, for the purpose of this section, means gas, water and electric service or any combination thereof.

Invoices. The operator of a utility service system shall provide each customer with an invoice for each billing period. The invoice shall clearly and separately show the following for each of the utility services provided:

(a) The opening and closing meter readings and the dates of those readings.

(b) The identification of all rates and quantities attributable to each block in the applicable rate structure.

(c) The total charge for the billing period.

Records. The operator of a metered utility service system shall retain records of all pertinent rate schedules, and individual customer billings for a period of at least 12 months. Such records shall be made available at reasonable times for inspection and copying by the customer and county sealer.

NOTE: Authority: Section 12027, Business and Professions Code. Reference: Sections 12024, 12024.1 and 12024.2, Business and Professions Code.

[THIS PAGE LEFT INTENTIONALLY BLANK]

Chapter 6. Automotive Products Specifications

Article 1. Brake Fluid Standards

4100. Specifications. - Brake fluid shall conform to the current specifications of the National Highway Traffic Safety Administration, United States Department of Transportation.

NOTE: Authority cited: Sections 12027 and 13710(c), Business and Professions Code. Reference: Section 13710(c), Business and Professions Code.

Article 2. Brake Fluid Labeling

.
4110 – 4111. - Repealed 11-19-85.

4112. Container Labeling. - In addition to the requirements of Section 13711(d), Business and Professions Code, the label of each container of brake fluid shall bear the brand name in letters not less than one-eighth inch (3.18 mm) in height.

Numerals used in connection with the brand name or merits of the product shall not exceed the actual dry equilibrium reflux boiling point of the product. Nothing in this section prohibits the use of any numeral or combination thereof in such a manner that it cannot reasonably be confused with the dry equilibrium reflux boiling point of the product.

NOTE: Authority cited: Sections 12027, 12609 and 13710(c), Business and Professions Code. Reference: Sections 12602 and 13711(d), Business and Professions Code.

Article 3. Automatic Transmission Fluid Standards

4120 - 4126. - Repealed 8-18-87.

Article 4. Automatic Transmission Fluid Registration

4130. - Repealed 11-19-85.

Article 5. Engine Fuel Standards

4140. Specifications-Automotive Spark Ignition Engine Fuel. Automotive spark ignition engine fuel specifications shall conform to the latest standards set forth in the American Society for Testing and Materials D 4814 with the following exception:

Vapor pressure specifications shall not be more than the maximum specified by any California state law. When the maximum Reid Vapor Pressure specification for automotive spark-ignition engine fuel is below that established by D 4814, the Vapor Pressure/Distillation Class AA specification for distillation temperatures may be applied in the manufacture of automotive spark-ignition engine fuel.

NOTE: Authority cited: Sections 12027 and 13440, Business and Professions Code. Reference: Sections 13401(m), 13440 and 13441, Business and Professions Code.

4141. Specifications-Kerosene. - Kerosene shall meet the specifications set forth by the American Society for Testing and Materials (ASTM) in the latest version of Standard Specification for Kerosene D 3699 contained in ASTM publication entitled: Annual Book of ASTM Standards, Section 5, Volume 05:03.

NOTE: Authority cited: Sections 12027, 12609 and 13450, Business and Professions Code. Reference: Sections 13401(c) and 13450, Business and Professions Code.

4142. Specifications-Fuel Oil. - Fuel oil shall meet the specifications set forth by the American Society for Testing and Materials (ASTM) in the latest version of Standard Specification for Fuel Oils D 396 contained in the ASTM publication entitled: Annual Book of ASTM Standards, Section 5, Volume 05:01, except the sulfur content shall not exceed the maximum specified by any California state law.

NOTE: Authority cited: Sections 12027 and 13450, Business and Professions Code. Reference: Sections 13401(1) and 13450, Business and Professions Code.

4143. Specifications-Diesel Fuel. - Diesel fuel shall meet the specifications set forth by the American Society for Testing and Materials (ASTM) in the latest version of Standard Specification for Diesel Fuel Oils D 975 contained in the ASTM publication entitled: Annual Book of ASTM Standards, Section 5, Volume 05:01, except the sulfur content shall not exceed the maximum specified by any California state law.

NOTE: Authority cited: Sections 12027 and 13450, Business and Professions Code. Reference: Sections 13401(j) and 13450, Business and Professions Code.

4144. Specifications – Developmental Fuels.

(a) Sales of developmental engine fuels authorized by the Department are not subject to restrictions imposed upon the sale of non-conforming fuel products as set forth in Business and Professions Code Sections 13441, 13442 and 13451, but the Department's authorization does not create a variance or waiver from any other applicable California statute or regulation.

(b) An applicant for authorization to sell developmental engine fuel must submit the following information to the Department:

(1) a statement of the potential benefit of the fuel to the people of California; and

(2) a description of test conditions associated with the use of the fuel, including control and monitoring practices, and the method of distribution and storage.

(c) Any authorization provided by the Department is subject to the following terms and conditions:

(1) The authorization is limited to a period of two years, with an automatic renewal for an additional two years in the absence of action to revoke the authorization by the Department; and,

(2) Damages caused by sale, delivery, storage, handling and usage of the fuel shall be addressed in accordance with contractual provisions negotiated and agreed upon by the authorization holder and the user; and,

(3) The authorization holder shall report information to the Department as required to monitor the use of the fuel during the process of developing a generally recognized chemical and performance standard through a recognized consensus organization or standards writing organization, such as the American Society for Testing and Materials ("ASTM") or the Society of Automotive Engineers ("SAE"). The Department shall specify the reporting requirements on a case by case basis at the time the authorization is granted.

(d) The Department may take action to revoke the authorization at any time. Revocation of the authorization is effective and final upon receipt of written notification by the authorization holder. The Department may take action to revoke the authorization if the Department finds:

(1) the authorization holder has violated any of the terms and conditions of the authorization; or,

(2) the authorization holder has abandoned efforts to develop a generally recognized chemical and performance standard for the fuel through a recognized consensus organization or standards writing organization.

(3) there is a high probability of equipment harm with the continued use of the developmental fuel or to protect the public safety.

(e) The authorization shall cease to exist upon publication of a generally recognized chemical and performance standard for the fuel.

NOTE: Authority cited: Sections 12027 and 13405, Business and Professions Code. Reference: Sections 13401, 13440-13443, and 13450-13451, Business and Professions Code.

4145. Specifications – E85 Ethanol Fuel. – E85 Ethanol Fuel shall meet the specifications set forth by ASTM International in the latest version of "Standard Specification for Fuel Ethanol (Ed75 – Ed85) for Automotive Spark-Ignition Engines D 5798", contained in the ASTM publication entitled: Annual Book of ASTM Standards, Section 5, Volume 05:03.

NOTE: Authority cited: Sections 12027 and 13440, Business and Professions Code. Reference: Sections 13401(m), 13440 and 13441, Business and Professions Code.

4146. Specifications – M85 Methanol Fuel. – M85 Methanol Fuel shall meet the specifications set forth by ASTM International in the latest version of "Standard Specification for Fuel Methanol (M70 – M85) for Automotive Spark-Ignition Engines D 5797", contained in the ASTM publication entitled: Annual Book of ASTM Standards, Section 5, Volume 05:03.

NOTE: Authority cited: Sections 12027 and 13440, Business and Professions Code. Reference: Sections 13401(m), 13440 and 13441, Business and Professions Code.

4147. Specifications – Biodiesel Blending Stock and Biodiesel Fuel Blends. – Biodiesel Blending Stock and Biodiesel Fuel Blends shall meet the following specifications:

(1) The diesel fuel used for blending shall meet the specifications set forth by ASTM International in the latest version of "Standard Specification for Diesel Fuel Oils D 975", contained in the ASTM publication entitled: Annual Book of ASTM Standards, Sectiofn 5, Volume 05:01.

(2) Biodiesel blending stock shall meet the specifications set forth by ASTM International in the latest version of "Standard Specification for Biodiesel Fuel (B100) Blend Stock for Distillate Fuels D 6751", contained in the ASTM publication entitled: Annual Book of ASTM Standards, Section 5, Volume 05:04.

(3) Any finished biodiesel fuel blend shall meet the specifications set forth by ASTM International in the latest version of "Standard Specification for Diesel Fuel Oils D 975", contained in the ASTM publication entitled: Annual Book of ASTM Standards, Section 5, Volume 05:01.

NOTE: Authority cited: Sections 12027 and 13450, Business and Professions Code. Reference: Sections 13401(i), 13450 and 13441, Business and Professions Code.

4148. Labeling and Price Advertising Sign Requirements for Biodiesel.

(a) Biodiesel blends shall have the words "Biodiesel fuel (BXX)", where XX represents the volume percent biodiesel in the fuel, used to describe the name of the product on all dispensers, advertising signs, and storage tank labels as required in Section 13480 and 13532 of the Business and Professions Code.

(b) Every biodiesel blend dispenser dispensing blends greater than 5 volume percent (B5) of biodiesel shall display on each customer side, as required by Section 13484 of the Business and Professions Code, a sign clearly visible which reads as follows:

"THIS FUEL CONTAINS BIODIESEL. CHECK THE OWNER'S MANUAL OR WITH YOUR ENGINE MANFUACTURER BEFORE USING."

NOTE: Authority cited: Sections 12027 and 13450, Business and Professions Code. Reference: Sections 13480, 13484 and 13582, Business and Professions Code.

[THIS PAGE LEFT INTENTIONALLY BLANK]

Article 6. Engine Oil Labeling and Exemptions

4150. Labeling. - In addition to the requirements of Section 13482, Business and Professions Code, the label of each container of motor oil products shall contain the SAE/API Service Classification in letters not less than one-eighth inch (3.18 mm) in height.

NOTE: Authority cited: Sections 12027 and 12609, Business and Professions Code. Reference: Section 13482, Business and Professions Code.

4151. Exemptions-Prediluted Oil. - Prediluted oil intended only for mixture with gasoline or other motor fuel in a two-cycle engine is exempt from the following requirements of the Business and Professions Code:

(a) Section 13460(b) - Flash Points for the Various SAE Classifications;

(b) Section 13460(c) - Service Classifications SAE J183;

(c) Section 13480(b) - Viscosity Grade Classification Number;

(d) Section 13482 - SAE/API Service Classification Markings on Containers.

NOTE: Authority cited: Sections 12027 and 12609, Business and Professions Code. Reference: Sections 13460, 13480 and 13482, Business and Professions Code.

4152. Tolerances. - The ratio of gasoline to motor oil or to motor oil solvent mixture, as required by Sections 13480 and 13490(b) of the Business and Professions Code, shall be within plus or minus 10 percent of the stated ratio on the dispenser.

NOTE: Authority cited: Sections 12027 and 12609, Business and Professions Code. Reference: Sections 13480 and 13490, Business and Professions Code.

[THIS PAGE WAS LEFT INTENTIONALLY BLANK]

Article 7. Labeling and Specifications of Engine Coolants

4160. Definitions Used in This Article.

(a) "Engine Coolant" means any substance or preparation, regardless of its origin, intended to be diluted before use as the cooling medium in the cooling system of an internal combustion engine to provide protection against freezing, overheating, and corrosion of the cooling system, or any product intended to be diluted before use which is labeled to indicate or imply that it will prevent freezing or overheating of the cooling system of an internal combustion engine. The term "engine coolant", as used in this article, also means "antifreeze."

(b) "Prediluted Engine Coolant" means any substance or preparation, regardless of its origin, intended or labeled for use full strength as the cooling medium or as a top off in the cooling system of an internal combustion engine to provide supplemental protection against freezing, overheating, and corrosion of the cooling system. The term "prediluted engine coolant", as used in this article, also means "prediluted antifreeze."

(c) "Recycled Engine Coolant" means engine coolant that contains recycled ingredients.

(d) "Recycled Prediluted Engine Coolant" means prediluted engine coolant that contains recycled ingredients.

(e) "Virgin Engine Coolant" means engine coolant that does not contain recycled or reconditioned ingredients.

(f) "Virgin Prediluted Engine Coolant" means prediluted engine coolant that does not contain recycled or reconditioned ingredients.

(g) "Reconditioned Engine Coolant" means recycled prediluted engine coolant produced from prediluted engine coolant that has been removed from a vehicle, reconditioned and is intended to be returned to the same vehicle.

NOTE: Authority cited: Section 12027, Business and Professions Code. Reference: Sections 13700, 13710(a) and 13713, Business and Professions Code.

4161. Labeling. - In addition to the requirements of Section 13711(a) and (b), Business and Professions Code, the label of each container of engine coolant, prediluted engine coolant, recycled engine coolant, and recycled prediluted engine coolant shall bear a distinctive brand name in letters not less than one-eighth inch (3.18 mm) in height. Additionally, each container packaged after January 1, 2003, shall clearly identify the applicable American Society for Testing and Materials (ASTM) Standard Designation which the product meets.

NOTE: Authority cited: Sections 12027 and 12609, Business and Professions Code. Reference: Sections 13700 and 13711(a)(b), Business and Professions Code.

4162. Specifications - Glycol Base Virgin Engine Coolant and Virgin Prediluted Engine Coolant for Automobiles and Light Duty Service. - Glycol base virgin engine coolant and virgin prediluted engine coolant for use in automobiles and light duty service shall meet the specifications set forth by the American Society for Testing and Materials (ASTM) in the Standard Specifications for Glycol Base Engine Coolant for Automobiles and Light Duty Service D 3306-00a. In addition, the reserve alkalinity of virgin engine coolants shall not be less than 10.0 mL of .1N hydrochloric acid and virgin prediluted engine coolants shall not be less than 5.0 mL of .1N hydrochloric acid when tested by ASTM procedure D 1121-98.

NOTE: Authority cited: Sections 12027, and 13710(a), Business and Professions Code. Reference: Sections 13710(a) and 13713, Business and Professions Code.

4163. Specifications – Recycled Glycol Base Engine Coolant for Automobiles and Light Duty Service. - Glycol base recycled engine coolant for use in automobiles and light duty service shall meet the specifications set forth by the American Society for Testing and Materials (ASTM) in the Standard Specification for Recycled Glycol Base Engine Coolant for Automobiles and Light Duty Service D 6472-00. In addition, the reserve alkalinity shall not be less than 10.0 mL of .1N hydrochloric acid when tested by ASTM procedure D 1121-98.

NOTE: Authority cited: Sections 12027 and 13710(a), Business and Professions Code. Reference: Sections 13710(a) and 13713, Business and Professions Code.

4164. Specifications - Recycled and Reconditioned Glycol Base Prediluted Engine Coolant for Automobiles and Light Duty Service. - Glycol base recycled prediluted engine and reconditioned engine coolant for use in automobiles and light duty service shall meet the specifications set forth by the American Society for Testing and Materials (ASTM) in the Standard Specification for Recycled Prediluted Aqueous Glycol Base Engine Coolant (50 Volume % Minimum) forAutomobile and Light Duty Service D6471-99. In addition, the reserve alkalinity shall not be less than 5.0 mL of .1N hydrochloric acid when tested by ASTM procedure D-1121-98.

NOTE: Authority cited: Sections 12027 and 13710(a), Business and Professions Code. Reference: Sections 13710(a) and 13713, Business and Professions Code.

4165. Exemptions - Reserve Alkalinity. - The Department may exempt any engine coolant, prediluted engine coolant, recycled engine coolant, recycled prediluted engine coolant or reconditioned engine coolant formulation from the reserve alkalinity requirement if the manufacturer, packer, seller, or distributor presents test data showing that the formulation meets the performance requirements specified for the Standard Test Methods for: "Corrosion Test for Engine Coolants in Glassware" - ASTM D 1384-7a, "Simulated Service Corrosion Testing of Engine Coolants" - ASTM D-2570-96, and "Corrosion of Aluminum Alloys in Engine Coolants Under Heat - Rejecting Conditions" - ASTM D 4340-96.

NOTE: Authority cited: Section 12027, Business and Professions Code. Reference: Sections 13710(a) and 13713, Business and Professions Code.

4166. Variance from Chloride Standard - Specifications for Recycled Engine Coolant. - The Department may grant a variance for recycled engine coolant from the chloride standard contained in the ASTM specification referenced in Section 4163, if the engine coolant producer or manufacturer of the engine coolant recycling system provides test data that the recycled engine coolant meets all the following conditions:

(a) The chloride content is less than one hundred fifty parts per million (150 ppm);

(b) The recycled engine coolant meets all other requirements as specified in Section 4163;

(c) The recycled engine coolant, when tested in accordance with Annex 3 of ASTM D 6472-00 shall visually provide a similar or smaller amount of precipitate when compared to the results obtained when testing the reference coolant specified in Annex 2 of ASTM D 6472-00;

(d) The recycled engine coolant shows a Protection Potential, E_G, of greater (more positive) than or equal to -400 mV v SHE (standard hydrogen electrode) when tested in accordance with the ASTM Standard Test Method for Repassivation Potential of Aluminum and Its Alloy by Galvanostatic Measurement D 6208-97.

Variances granted under this section shall remain in effect until January 1, 2003.

NOTE: Authority cited: Section 12027, Business and Professions Code. Reference: Sections 13710(a), 13710.5 and 13713, Business and Professions Code.

4167. Variance from Chloride Standard – Specifications for Recycled Prediluted Engine Coolant or Reconditioned Engine Coolant. - The Department may grant a variance for recycled prediluted engine coolant from the chloride standard contained in the ASTM specifications referenced in Section 4164, if the engine coolant producer or manufacturer of the engine coolant recycling system provides test data that the recycled prediluted engine coolant or reconditioned engine coolant meets all the following conditions:

(a) The chloride content is less than one hundred fifty parts per million (150 ppm);

(b) The recycled prediluted engine coolant meets all other requirements as specified in Section 4164;

(c) The recycled prediluted engine coolant, when tested in accordance with Annex 3 of ASTM D 6471-99 shall provide a similar or smaller amount of precipitate when compared to the results obtained when testing the reference coolant specified in Annex 2 of ASTM D 6471-99;

(d) The recycled prediluted engine coolant shows a Protection Potential, E_G, of greater (more positive) than or equal to -400 mV v SHE (standard hydrogen electrode) when tested in accordance with ASTM Standard Test Method for Repassivation Potential of Aluminum and Its Alloys by Galvanostatic Measurement D 6208-97. The test solution shall be prepared as follows: Mix 50 volume percent of the recycled prediluted engine coolant or reconditioned engine coolant with 25 volume percent corrosive water (as specified in ASTM D 6208-97) and 25 percent volume deionized water at room temperature.

Variances granted under this section shall remain in effect until January 1, 2003.

NOTE: Authority cited: Section 12027, Business and Professions Code. Reference: Sections 13710(a) and 13713, Business and Professions Code.

4168. Availability of ASTM Standards and Test Procedures The American Society for Testing and Materials (ASTM) product standards and test procedures incorporated by reference in this article, with the exception of ASTM D 3306-00a, are available in the 2000 version of the Annual Book of ASTM Standards, Volume 15.05. ASTM D 3306-00a, is only available as a separate publication until September 2001. After September 2001, ASTM D 3306-00a will be available in the 2001 version of the Annual Book of ASTM Standards, Volume 15.05. These documents are available from the American Society for Testing and Materials (ASTM) located at 100 Barr Harbor Drive, West Conshohocken, Pennsylvania 19428-2959.

NOTE: Authority cited: Section 12027, Business and Professions Code. Reference: Sections 13710(a) and 13713, Business and Professions Code.

4169. Evaluation of Test Results - No adjustments for test precision or bias shall be applied in the evaluation of specifications established in this article for which repeatability, reproducibility, or bias statements have not been established.

(a) Evaluation of Suspended Matter and Sediment in Engine Coolant and Recycled Engine Coolant. – Shake the engine coolant to insure a homogeneous mixture and combine 140 mL of this mixture with 60 mL of deionized water at room temperature. Immediately pour the blended mixture into a 250 mL Griffin beaker and allow it to stand at room temperature undisturbed for 24 hours. Visually examine the blend for suspended matter and sediment. A flashlight or other similar source of illumination shall be used to aid in the evaluation. The mixture shall not contain visually identifiable suspended matter or sediment.

(b) Evaluation of Suspended Matter and Sediment in Prediluted Engine Coolant and Prediluted Recycled Engine Coolant. - Shake the prediluted engine coolant to insure a homogeneous mixture. Immediately pour 200 mL of the mixture into a 250 mL Griffin beaker and allow it to stand at room temperature undisturbed for 24 hours. Visually examine the blend for suspended matter and sediment. A flashlight or other similar source of illumination shall be used to aid in the evaluation. The mixture shall not contain visually identifiable suspended matter or sediment.

NOTE: Authority cited: Section 12027, Business and Professions Code. Reference: Sections 13710(a) and 13713, Business and Professions Code.

4170. Verification of Claim for Recycled Engine Coolant. - Any distributor, manufacturer, producer, or seller of recycled engine coolant which has a chloride ion concentration greater than 25 parts per million (ppm) or a sulfate ion concentration greater than 100 ppm shall provide, upon request of a duly authorized representative of the Department, fleet testing results as specified in ASTM D 6472-00. Any product for which test results are not provided to the Department within 30 days of request shall be deemed adulterated. Verification of fleet testing data by a manufacturer of an engine coolant recycling system is prima facie evidence that the product produced using the same equipment, technique and formulation meets the fleet testing requirements in ASTM D 6472-00.

NOTE: Authority cited: Section 12027, Business and Professions Code. Reference: Sections 13710(a) and 13713, Business and Professions Code.

4171. Verification of Claim for Recycled Prediluted Engine Coolant or Reconditioned Engine Coolant. – Any distributor, manufacturer, producer, or seller of recycled prediluted engine coolant or reconditioned engine coolant which has a chloride ion concentration greater than 33 parts per million (ppm) or a sulfate ion concentration greater than 140 ppm shall provide, upon request of a duly authorized representative of the Department, fleet testing results as specified in ASTM D 6471-99. Any product for which test results are not provided to the Department within 30 days of request shall be deemed adulterated. Verification of fleet testing data by a manufacturer of an engine coolant recycling system is prima facie evidence that the product produced using the same equipment, technique and formulation meets the fleet testing requirements in ASTM D 6471-99.

NOTE: Authority cited: Section 12027, Business and Professions Code. Reference: Sections 13710(a) and 13713, Business and Professions Code.

4172-4175. Repealed 8-16-02.

[THIS PAGE WAS LEFT INTENTIONALLY BLANK]

Chapter 7. Advertising of Gasoline and Other Motor Vehicle Fuels

4200. Advertising Medium. - "Advertising medium," as used in this subchapter, includes banner, sign, placard, poster, streamer and card, whether or not mounted, whether appearing on the same or different standards, or whether or not physically connected with each other, provided, the advertised statements can reasonably be read as one advertising message.

NOTE: Authority cited: Sections 12027 and 12609, Business and Professions Code. Reference: Sections 13531, 13532, 13534, 13535, 13536, 13537, 13538, 13539 and 13540, Business and Professions Code.

4201. Price Sign Display on Dispensing Apparatus. - In addition to the requirements of Sections 13470 and 13480, Business and Professions Code, any sign referring to the price of gasoline or other motor vehicle fuel displayed on any dispensing apparatus from which gasoline or other motor vehicle fuel is being offered for sale or sold, shall be limited to the following:

(a) actual price per gallon or liter, and

(b) conversion chart information required for liter sales per Section 13470.5, Business and Professions Code.

(c) Brand name and the name of the product may be displayed.

NOTE: Authority cited: Sections 12027 and 12609, Business and Professions Code. Reference: Sections 13470, 13470.5 and 13480, Business and Professions Code.

4202. Illumination. - In addition to the requirements of Section 13536, Business and Professions Code, when any advertising message is illuminated, the entire message shall be uniformly illuminated.

NOTE: Authority cited: Sections 12027 and 12609, Business and Professions Code. Reference: Section 13536, Business and Professions Code.

Chapter 8. Motor Oil Fee

4300. Definition of "Motor Oil" and Other Terms for Purposes of Fee Responsibility. - For purposes of fee responsibility under Sections 13430 and 13431 of the Business and Professions Code, "motor oil" includes natural, synthetic and re-refined motor oils, whether or not in retail containers, and in addition, any product used as an additive to a motor oil used in the lubrication of internal combustion engines. Refinery base stocks, manufacturing additives used by motor oil dealers in the commercial compounding and production of motor oils, and other motor oil components are not motor oils for the purposes of fee responsibility unless they are used separately in the lubrication of internal combustion engines, in which case they are "motor oils" for the purpose of the fee responsibility.

For purposes of this subchapter, the term "additive" when used alone, means any product to be added to the motor oil in the crankcase of an internal combustion engine for the purpose of reducing friction, heat or wear of the internal moving parts.

"Internal combustion engine" means all engines producing power by internal combustion and includes 2-cycle and 4-cycle internal combustion engines and turbine engines.

"Export" or "exported" means the delivery or shipment of motor oil by the dealer from a point in California to a point outside of California when, pursuant to the contract of sale, the motor oil is delivered by the dealer to:

(a) the out of state point by facilities operated by the dealer; or

(b) a carrier for shipment to a customer at the out of state point; or

(c) a customs broker or forwarding agent for shipment to a location outside of California.

NOTE: Authority cited: Section 12027, Business and Professions Code. Reference: Section 13430, Business and Professions Code.

4302. Fee Responsibility and Exemption.

(a) The first motor oil dealer that produces, sells or distributes motor oil in California, whether or not packaged in retail containers, shall pay the fee for all such motor oil sold in California.

(b) Motor oil produced outside of California and transported into California for export shall be exempt from the motor oil fee, provided adequate accounting records substantiating exports from California are maintained and available for audit by the Director. In addition, motor oil exported for sale outside this State by a motor oil dealer, including such motor oil delivered by a motor oil dealer to any vessel clearing from a port of this State for a port outside this State and actually exported from this State in the vessel, is exempt from the fee provided for in Section 13431 of the Business and Professions Code and Section 4304 of Title 4, California Code of Regulations.

NOTE: Authority cited: Section 12027, Business and Professions Code. Reference: Sections 13430 and 13431, Business and Professions Code.

4304. Fees and Returns.

(a) The fee provided for in Section 13431 of the Business and Professions Code is established at two cents ($0.02) per gallon effective July 1, 1996.

(b) Each person responsible for the payment of the fee shall file a return with the Department no later than 30 days after the quarter ending September 30, December 31, March 31, and June 30. The return shall be on a form provided by the Department, complete and accompanied by payment of the fee due for such transactions.

(c) Any return not received by the Cashier, California Department of Food and Agriculture in Sacramento by the dates stated in subsection (b), not complete or not accompanied by the full fee due, is delinquent. A return that is postmarked not later than the fifth day of the month in which the return is due shall be deemed received by the date on which it was due.

NOTE: Authority cited: Sections 12027 and 13433, Business and Professions Code. Reference: Sections 13431-13433, Business and Professions Code.

4306. Penalties. - For any delinquency in making a return, or any deficiency in payment, the Director shall add to such delinquent payment a penalty of ten percent of the amount which is due. For delinquencies beyond one year, an additional one percent per month shall be added.

NOTE: Authority cited: Sections 12027 and 13433, Business and Professions Code. Reference: Sections 13431 and 13433, Business and Professions Code.

4307. Refund of Fees Paid. - All requests for refund of payments made pursuant to Section 4304 shall be submitted to the Department within three years from the date of the payment of the fee. Requests for refund shall contain the following information:

(a) A letter requesting the refund, signed by an employee of the company with knowledge of the transactions;

(b) A ledger sheet tabulating purchases and exports for which the refund is being requested;

(c) Copies of invoices, vouchers, etc., documenting that the Motor Oil Fee was paid; and,

(d) Copies of invoices, vouchers, bills of lading, etc., documenting that the motor oil was exported from California.

Requests for refunds submitted later than three years from the time of payment of the motor oil fee or not supported by the required documentation will be returned, unprocessed, to the sender by the Department.

NOTE: Authority cited: Sections 12027 and 13433, Business and Professions Code. Reference: Sections 13431-13433, Business and Professions Code.

4308. Records. - Each person required to file a return pursuant to Section 13431, Business and Professions Code, shall maintain in California or, with the Director's permission at another location, an accurate record of all transactions subject to fee assessment. Such records shall be subject to audit by the Director. The Director may require records kept outside of California to be copied and sent to California for audit. Alternatively, if the taxpayer elects to have all audits conducted out-of-state, the costs for the out-of-state audits will be reimbursed to the State by the taxpayer.

NOTE: Authority cited: Sections 12027 and 13433, Business and Professions Code. Reference: Sections 13431 and 13433, Business and Professions Code.

[THIS PAGE WAS LEFT INTENTIONALLY BLANK]

Chapter 9. Weighmaster Enforcement

Article 1. General Provisions

4400. Definition. - Repealed 4-25-86.

4401. Licenses. - A copy of the current weighmaster license shall be maintained at each weighing or measuring location and made available to a Sealer upon request.

NOTE: Authority cited: Sections 12027 and 12735, Business and Professions Code. Reference: Sections 12703 and 12704, Business and Professions Code.

Article 2. Weighmaster Certificates

4410. Recording Procedures. - In addition to the provisions of the Business and Professions Code, information shall be recorded on weighmaster certificates as follows:

(a) Certificates issued for gross weight only shall have the words “gross only” entered on the certificate in the space provided for recording the tare weight.

(b) Certificates issued for tare weight only shall have the words “tare only” entered on the certificate in the space provided for recording the gross weight.

(c) Certificates issued for net quantity only that contain gross and tare spaces shall have the words “Net Only” entered on the certificate in the spaces provided for recording the gross and tare weights.

NOTE: Authority cited: Sections 12027 and 12735, Business and Professions Code. Reference: Sections 12713 and 12715, Business and Professions Code.

4411 - 4415. - Repealed 4-25-86.

Article 3. Predetermined Individual Tare Weights

4420. Predetermined Individual Tare Weight. - A predetermined individual tare weight is the weight of a vehicle, container or pallet determined by a weighmaster prior to the time of delivery of a product and is established and used in accordance with the following provisions.

NOTE: Authority cited: Sections 12027, 12723 and 12735, Business and Professions Code. Reference: Sections 12722 and 12723, Business and Professions Code.

4421. Establishing. - Predetermined individual tare weights shall be established as follows:

(a) A weighmaster shall weigh the vehicle, container or pallet and issue a "tare only" certificate.

(b) Each vehicle for which a predetermined individual tare weight has been established shall be clearly marked on both sides with the company name or code, license number and predetermined tare weight. The tare weight shall be permanently marked either on the vehicle or on a placard secured thereto. The tare weight shall be identified in numbers and letters not less than three (3) inches (7.62 cm) in height. In the case of gondola units, the required identification shall be applied to both sides of the container portion.

(c) Each container or pallet for which a predetermined individual tare weight has been established shall be clearly marked on both sides with the company name or code, company identification number and predetermined tare weight. The tare weight shall be identified in letters and numbers not less than three (3) inches (7.62 cm) in height.

NOTE: Authority cited: Sections 12027, 12723 and 12735, Business and Professions Code. Reference: Sections 12722 and 12723, Business and Professions Code.

4422. Certificate Requirements. - A predetermined individual vehicle, container or pallet tare weight may be used by a weighmaster to determine the net weight of a commodity, provided the following information appears on the certificate:

(a) the fact that a predetermined individual tare weight is being used. This may be designated by the letters "P.T."; and

(b) the predetermined tare weight, company name or code, and license number or serial number of each vehicle, container and/or pallet.

NOTE: Authority cited: Sections 12027, 12723 and 12735, Business and Professions Code. Reference: Sections 12715, 12722 and 12723, Business and Professions Code.

4423. Conditions of Use. - The following conditions apply to the use of predetermined individual tare weights:

(a) predetermined individual tare weights may be used by a weighmaster unless a party having a legal or financial interest in the transaction notifies the weighmaster prior to the issuance of the certificate that a predetermined individual tare weight shall not be used; and

(b) a weighmaster shall not use a predetermined individual tare weight which is not based on weighmaster records in his/her possession unless furnished with a copy of the "tare only" certificate which established the predetermined individual tare weight; and

(c) a weighmaster shall not use a predetermined individual tare weight if for any reason it appears that the tare weight may be beyond the tolerance levels prescribed by Section 4450 of this subchapter.

NOTE: Authority cited: Sections 12027, 12723 and 12735, Business and Professions Code. Reference: Sections 12722 and 12723, Business and Professions Code.

Article 4. Seasonal Tare Weights

4430. Seasonal Tare Weight. - A seasonal tare weight is the tare weight of a fuel consuming vehicle used to transport bulk loads of tomatoes and is established and used in accordance with the following provisions. Seasonal tare weights are determined by weighmasters and are officially established with the issuance of a cab card.

NOTE: Authority cited: Sections 12027, 12723 and 12735, Business and Professions Code. Reference: Sections 12722, 12723 and 12729, Business and Professions Code.

4431. Establishing. - Seasonal tare weights shall be established as follows:

(a) A weighmaster shall weigh each unladen vehicle after the driver has confirmed that the vehicle has full fuel tanks. (An unladen vehicle is a vehicle without commodity or persons.)

(b) The weighmaster shall:

(1) Complete and issue a "tare only" weighmaster certificate.

(2) Complete and issue an original cab card which officially establishes the seasonal tare weight. The cab card shall be furnished by the Division of Measurement Standards. The seasonal tare weight stated on the cab card shall be 250 pounds less than the weight shown on the "tare only" weighmaster certificate.

(3) Enter the required information on a daily seasonal truck tare recap sheet, furnished by the Division of Measurement Standards. This recap sheet will be mailed to the Division within two business days.

NOTE: Authority cited: Sections 12027, 12723 and 12735, Business and Professions Code. Reference: Sections 12722, 12723 and 12729, Business and Professions Code.

4432. Certificate Requirement. - A seasonal tare weight may be used by a weighmaster to determine the net weight of a commodity, provided the number of the cab card appears on the certificate.

NOTE: Authority cited: Sections 12027, 12723 and 12735, Business and Professions Code. Reference: Sections 12715, 12722, 12723 and 12729, Business and Professions Code.

4433. Conditions of Use. - The following conditions apply to the use of cab cards:

(a) a cab card shall be valid for a single tomato harvest season only; and

(b) the cab card shall be carried at all times in the vehicle for which the seasonal tare weight has been established; and

(c) the cab card shall be presented to the weighmaster when using the seasonal tare weight to certify the net weight of a load; and

(d) the cab card shall not be used if the vehicle tare weight varies by more than 300 pounds from the tare weight stated on the cab card; and

(e) a cab card on which the weight figures have been changed or altered in any manner shall not be used; and

(f) a new cab card shall be obtained when the weight or vehicle identification information on the cab card changes; and

(g) the cab card may be used by a weighmaster to determine the net weight of a load unless a party having a legal or financial interest in the transaction notifies the weighmaster prior to the issuance of the certificate that a seasonal tare weight (cab card) shall not be used.

NOTE: Authority cited: Sections 12027, 12723 and 12735, Business and Professions Code. Reference: Sections 12722, 12723 and 12729, Business and Professions Code.

Article 5. Common Tare Weights

4440. Common Tare Weight. - A common tare weight is the average weight of a group (lot) of containers or pallets, determined by a weighmaster prior to the time of delivery of the product.

NOTE: Authority cited: Sections 12027, 12723 and 12735, Business and Professions Code. Reference: Sections 12722 and 12723, Business and Professions Code.

4441. Establishing. - Common tare weights shall be established as follows:

(a) The container or pallets within the group (lot) shall each weigh 1,000 lbs. or less, shall be under the control of one user and shall be within a uniform weight range. "Uniform weight range" is defined to mean within a variation (plus or minus) of 0.2 pounds or 20%, whichever is greater.

(b) The weighmaster shall weigh a randomly selected sample of containers or pallets, either individually or in sample sub-groups, as prescribed in Section 4442 of this Article. The common tare weight for each container or pallet shall be determined by mathematically dividing the total weight of the random sample by the number of containers or pallets in the sample. At the time the random sample is weighed, all containers and pallets shall be free from foreign matter and in usable condition.

(c) The common tare weight determined from the sample shall be rounded as prescribed in Section 4443 of this Article.

(d) The weighmaster establishing the common tare weight shall issue a weighmaster certificate and complete a "Common Tare Notice" containing information prescribed by the Director. The originals of the weighmaster certificate and the Common Tare Notice shall be mailed to the Division of Measurement Standards within five (5) days. A copy of the Common Tare Notice shall also be maintained at each weighing location where the common tare weight will be used for certification purposes.

(e) The common tare weight established by the weighmaster shall only apply to the containers or pallets in the lot from which the random sample was selected.

NOTE: Authority cited: Sections 12027, 12723 and 12735, Business and Professions Code. Reference: Sections 12722 and 12723, Business and Professions Code.

4442. Sample Size. - When determining or verifying common tare weights, the following sample size shall be used:

(a) For all pallets and any container used individually, the minimum size of the random sample shall be 96 or 100% of the lot, whichever is less.

(b) For all palletized containers, the minimum size of the random sample shall be determined from the following table:

Number of Containers Per Pallet	*Minimum Number of Pallets (with containers) in Random Sample*
Less than 10	96 or 100%, whichever is less
10 to 19	37 or 100%, whichever is less
20 to 49	22 or 100%, whichever is less
50 or more	11 or 100%, whichever is less

NOTE: Authority cited: Sections 12027, 12723 and 12735, Business and Professions Code. Reference: Sections 12722 and 12723, Business and Professions Code.

4443. Rounding Procedures. - Common and average tare weights shall be rounded (digits of 5 or greater are rounded up) as follows:

(a) If the container tare weight is less than 30 pounds, the weight shall be rounded to the nearest one-tenth (0.1) pound.

(b) If the container tare weight is at least 30 pounds or more, the weight shall be rounded to the nearest one (1) pound.

NOTE: Authority cited: Sections 12027, 12723 and 12735, Business and Professions Code. Reference: Sections 12722 and 12723, Business and Professions Code.

4444. Certificate Requirements. - A common tare weight may be used by a weighmaster to determine the net weight of a commodity, provided the following information appears on the weighmaster certificate:

(a) the fact that a common tare weight is being used. This may be designated by the letters "C.T."; and

(b) the common tare weight, description of the container, and a name of the person or firm for whom the common tare weight has been established. A code designation may be used in lieu of the description of the container, provided this code also appears on the Common Tare Notice.

NOTE: Authority cited: Sections 12027, 12723 and 12735, Business and Professions Code. Reference: Sections 12715, 12722 and 12723, Business and Professions Code.

4445. Conditions of Use. - The following conditions apply to the use of common tare weights:

(a) common tare weights may only be used by a weighmaster licensed at a location at which a copy of the Common Tare Notice is maintained; and

(b) common tare weights may be used by a weighmaster unless a party having a legal or financial interest in the transaction notifies the weighmaster prior to issuance of the certificate that a common tare weight shall not be used; and

(c) the weighmaster certifying to a common tare weight shall verify that the total number of containers includes not more than 10% of other users' containers and that all containers are within uniform weight range (as defined by Section 4441(a) of this Article); and

(d) a weighmaster shall not use a common tare weight if for any reason it appears that the common tare weight may not meet the tolerance levels prescribed by Section 4450.

NOTE: Authority cited: Sections 12027, 12723 and 12735, Business and Professions Code. Reference: Sections 12722 and 12723, Business and Professions Code.

4446. Verification and Enforcement. - The Director may verify the accuracy of an established common tare weight by weighing a representative sample of containers, as prescribed by Section 4441 of this Article, and by rounding as prescribed by Section 4443, also of this Article. If a common tare weight is found to be beyond the tolerance levels established by Section 4450 of this subchapter, the Director shall issue an order that the common tare weight not be used until reestablished by a weighmaster.

NOTE: Authority cited: Sections 12027, 12723 and 12735, Business and Professions Code. Reference: Sections 12722 and 12723, Business and Professions Code.

Article 6. Limits of Permissible Error

4450. Tolerance Levels. - Except as provided in Section 12722(b) of Chapter 7, Division 5, of the Business and Professions Code, vehicles and containers for which pre-determined individual tare weights and common tare weights have been established shall be maintained as close as practicable to the established tare weight, but in no event shall such tare weights exceed the tolerance level of two-tenths (0.2) pound or two percent (2%) of the established tare weight, whichever is greater.

NOTE: Authority cited: Sections 12027, 12723 and 12735, Business and Professions Code. Reference: Sections 12722 and 12723, Business and Professions Code.

Article 7. Average Tare Weights

4460. Average Tare Weight. - An average tare weight is the average weight of a group (lot) of containers within uniform weight range (as defined by Section 4441(a) of this subchapter) and established by a weighmaster. Average tare weights are determined for each load at the time of certification and are not used for subsequent loads.

NOTE: Authority cited: Sections 12027, 12723 and 12735, Business and Professions Code. Reference: Sections 12722 and 12723, Business and Professions Code.

4461. Establishing.

(a) Average tare weights for containers of uniform weight range, under the control of one user, and used to transport any commodity, may either be established according to the procedures prescribed in Sections 4440-4445 (Common Tare Weights) of this subchapter, or according to subsection (b) below.

If, however, the containers are of such construction or treatment as to vary in weight as a result of hydrocooling, the average tare weight must be established according to subsection (b) below.

(b) A weighmaster shall randomly select two (2) containers for the first fifty (50) containers in the lot, and one (1) additional container for each fifty (50) additional containers in the lot. However, at no time shall the random sample size be less than three (3) containers.

The average tare weight shall be determined by mathematically dividing the total weight of the random sample by the number of containers in the sample.

The average tare weight determined from the sample shall be rounded as prescribed in Section 4443 of this subchapter. The weighmaster certificate issued for containers shall show the total number of containers, the number of sample containers, and the average tare weight.

NOTE: Authority cited: Sections 12027, 12723 and 12735, Business and Professions Code. Reference: Sections 12722 and 12723, Business and Professions Code.

Article 8. Volumetric Conversion to Weight of Squid

4470. Container Requirements. - The following conditions apply to containers used in volumetric conversion:

(a) containers used for removing squid from fishing boats shall be constructed of nonabsorbent material and of such construction that they retain their shape when filled; and

(b) only full containers removed from the boat shall be subject to volumetric conversion; squid removed in partially filled containers shall be weighed.

NOTE: Authority cited: Sections 12027, 12734 and 12735, Business and Professions Code. Reference: Section 12734, Business and Professions Code.

4471. Container Markings. - Each container shall be permanently marked on two sides, in numbers and letters at least three (3) inches (7.62 cm) in height, with the following information:

(a) the company name or code;

(b) the volume in cubic feet to the nearest (1/100 cubic foot); and

(c) the tare weight of the container.

NOTE: Authority cited: Sections 12027, 12734 and 12735, Business and Professions Code. Reference: Section 12734, Business and Professions Code.

4472. Certificate Requirements. - A weighmaster certificate which determines the weight of squid by volumetric conversion shall contain the following information:

(a) number of full containers removed;

(b) volume of each container (Volume = Height x Width x Length);

(c) weight of squid per cubic foot, as established by the Director;

(d) net weight determined by volumetric conversion (Total Weight = Number of Containers x Volume of Containers x Weight Per Cubic Foot);

(e) number of partially filled containers;

(f) net weight of squid in partially filled containers; and

(g) total weight of squid received.

The above information may be shown in equation form:

EXAMPLE

Number of full containers x Volume of each container x Weight per cubic foot	=	Net weight determined by volumetric conversion
	+	
Number of partially filled containers (actually weighed)	=	Net weight of squid in partially filled containers TOTAL WEIGHT OF SQUID RECEIVED

NOTE: Authority cited: Sections 12027, 12734 and 12735, Business and Professions Code. Reference: Sections 12713(b) and 12734, Business and Professions Code.

Article 9. Director's Approval of Inspection of Weighmaster Records

4480. Application. - These regulations shall apply to requests made to the Department of Food and Agriculture by a district attorney or district attorney's designated agent for inspection of weighmaster weight certificates or related documents pursuant to Vehicle Code Section 35557(a).

NOTE: Authority cited: Section 12027, Business and Professions Code; and Section 35557, Vehicle Code. Reference: Section 35557, Vehicle Code.

4481. Definition of Designated Agent. - As used in these regulations, a designated agent of the district attorney is an individual within the district attorney's office and designated by the district attorney and authorized to make requests for inspection of weighmaster weight certificates or other related documents. Such designation shall be made in writing to the Director of the Department of Food and Agriculture by the district attorney.

NOTE: Authority cited: Section 12027, Business and Professions Code; and Section 35557, Vehicle Code. Reference: Section 35557, Vehicle Code.

4482. Information Required by the Director. - Any district attorney or designated agent of the district attorney who shall request inspection of any weighmaster weight certificates or related documents through the Department of Food and Agriculture shall certify that:

(a) He/she is the district attorney or district attorney's designated agent.

(b) He/she possesses a citation or copy of a citation issued for gross vehicle overweight, which has been referred by an Area Commander of the California Highway Patrol along with their reasons for believing that there may be an act of unlawful business practice, and requests the right to review records pertaining to trucks operated by the named company in the possession of specified weighmasters.

(c) He/she has served a copy of the request on an official of the named company, or is declining to do so for reasons specifically stated.

(d) He/she will reveal and discuss the findings from the review of these records with the named company prior to initiating any civil action against the company which is based in whole or in part on these records.

NOTE: Authority cited: Section 12027, Business and Professions Code; and Section 35557, Vehicle Code. Reference: Section 35557, Vehicle Code.

4483. Approval of Request. - If the Director of the Department of Food and Agriculture finds that the above conditions have been met, he/she shall issue a letter to the district attorney authorizing the district attorney or employees of the district attorney to inspect the records of those weighmasters to determine the number and extent of violations of Division 15, Chapter 5, Article 1 of the California Vehicle Code that may exist, related to the named company, covering a period of 30 days prior to and 30 days subsequent to the issuance of the identified citation.

NOTE: Authority cited: Section 12027, Business and Professions Code; and Section 35557, Vehicle Code. Reference: Section 35557, Vehicle Code.

4484. Denial of Request. - If the Director of the Department of Food and Agriculture finds that any of the above conditions have not been met, he/she shall issue a letter to the district attorney informing the district attorney that a letter authorizing inspection of weighmaster weight certificates or related documents has been denied, as well as the specific finding or findings upon which the denial was based.

NOTE: Authority cited: Section 12027, Business and Professions Code; and Section 35557, Vehicle Code. Reference: Section 35557, Vehicle Code.

4485. Applicability--District Attorney. - Nothing in these regulations shall be deemed to apply to any request by any district attorney or district attorney employee to obtain weighmaster weight certificates or related documents for purposes other than prosecuting a civil or criminal violation arising out of Division 15, Chapter 5, Article 1 of the California Vehicle Code.

NOTE: Authority cited: Section 12027, Business and Professions Code; and Section 35557, Vehicle Code. Reference: Section 35557, Vehicle Code.

4486. Applicability--Other Law Enforcement Agencies. - Nothing in these regulations shall be deemed to apply to or limit the rights of any law enforcement agency other than any district attorney's office to obtain such weighmaster weight certificates or related documents for any law enforcement purpose other than prosecuting a civil or criminal violation arising out of Division 15, Chapter 5, Article 1 of the California Vehicle Code.

NOTE: Authority cited: Section 12027, Business and Professions Code; and Section 35557, Vehicle Code. Reference: Section 35557, Vehicle Code.

Article 10. Timber Tare Weights

4490. Definitions. - The following definitions apply to timber tare weights:

(a) A timber tare weight is the unladen weight of a vehicle or combination of vehicles, used to transport loads of logs, where an automated weight scaling program is used to determine the board foot volume of the load.

(b) Sample scale frequency is the number of loads of logs to be measured by a log scaler at a frequency agreed to by the buyer and seller, e.g., 1 in 4 loads must be measured by a log scaler.

NOTE: Authority cited: Sections 12027, 12723 and 12735, Business and Professions Code. Reference: Sections 12722, 12723 and 12729, Business and Professions Code.

4491. Establishing. - Timber tare weights shall be established in accordance with the following provisions:

(a) A timber tare weight shall be established, by a weighmaster, as the mathematical average of the actual tare weights of a vehicle for the first five consecutive loads hauled into the mill.

(b) After establishment, a timber tare weight for any vehicle shall be calculated from the mathematical average of the five most current actual tare weights. The frequency for updating the timber tare weight, after its establishment, shall be the same as the sample scale frequency and in no case less frequent than one in ten.

NOTE: Authority cited: Sections 12027, 12723 and 12735, Business and Professions Code. Reference: Sections 12722 and 12723, Business and Professions Code.

4492. Certificate Requirements. - A timber tare weight may be used by a weighmaster to determine the net weight of timber: provided, disclosure that a timber tare weight is being used appears on the certificate immediately adjacent to the tare weight entry. This shall be designated by the letters “T.T.” and is in addition to any information required by California Business and Professions Code, Division 5, Chapter 7.

NOTE: Authority cited: Sections 12027, 12723 and 12735, Business and Professions Code. Reference: Sections 12715, 12722 and 12723, Business and Professions Code.

4493. Conditions of Use. - The following conditions apply to the use of timber tare weights:

(a) Timber tare weights shall be limited to sales where agreed to by all parties having a legal or financial interest.

(b) A weighmaster shall not use a timber tare weight which is not based on weighmaster records in their possession.

(c) Whenever the timber tare weight has not been updated for more than one hundred and twenty (120) days, a new timber tare weight shall be established for that vehicle.

(d) A current actual tare weight that differs from the timber tare weight for that vehicle by more than plus or minus two percent (±2%) must automatically cause the establishment of a new timber tare weight for that vehicle.

(e) When any vehicle fails to obtain a current tare weight when required by the program to update the timber tare weight, the existing timber tare weight shall be used for that load and the system must automatically cause the establishment of a new timber tare weight for that vehicle.

(f) Vehicles with cribs or inserts for short logs, mule trains, and self loaders shall not use a timber tare weight unless the cribs, inserts, or self-loading apparatus are permanently installed.

(g) Timber tare weight information must be kept as part of the weighmaster records for a period of four (4) years. These records are to include, but are not limited to, tare weight records supporting timber tare weight updates, tare frequency and sample scaling frequency.

NOTE: Authority cited: Sections 12027, 12723 and 12735, Business and Professions Code. Reference: Sections 12716, 12722 and 12723, Business and Professions Code.

Article 11. Multiple Draft Weighing Operations

4495. Application.

(a) These regulations shall apply to written requests made to the Department for authorization to use multiple draft static weighing operations.

(b) Also see General and Scales Code requirements, California Code of Regulations, Title 4, Division 9, Chapter 1.

NOTE: Authority cited: Sections 12027, 12107 and 12735, Business and Professions Code. Reference: Section 12728(d)(2), Business and Professions Code.

4495.1. Definitions. - As used in this article:

(a) A multiple draft static weighing operation of a combination of vehicles is a weighing procedure whereby individual weights of connected vehicles in the combination are determined without the entire combination of vehicles resting on the scale platform simultaneously and without disconnecting the vehicles. Multiple draft static weighing operations and multiple draft weighing operations have the same meaning for the purpose of this article.

(b) A single draft static weighing operation is a weighing procedure whereby the entire vehicle or combination of vehicles is resting on the scale platform simultaneously.

NOTE: Authority cited: Sections 12027, 12107 and 12735, Business and Professions Code. Reference: Section 12728(d)(2), Business and Professions Code.

4495.2. Request for Authorization. - A written request for authorization is limited to those operations where the applicant has complete control of all the vehicles and weighing device(s). The written request shall be submitted to the Department and shall contain the following information:

(a) The procedures that will be used in the multiple draft weighing operation. This shall include the specific weighing location, the weighing device(s) to be used, and the position of vehicles relative to the load-receiving element of the scale.

(b) The make, model and a unique identification designation for each individual vehicle.

(c) The test data supporting accuracy of the proposed multiple draft weighing operation.

NOTE: Authority cited: Sections 12027, 12107 and 12735, Business and Professions Code. Reference: Section 12728(d)(2), Business and Professions Code.

4495.3. Conditions of Use.

(a) The pulled vehicle shall not be equipped with a braking system.

(b) The pulled vehicle shall have a minimum of two axles separated by such a distance that they completely support the load and also shall be equipped with a free-floating, non-rigidly mounted tongue.

(c) A copy of the letter issued by the Department authorizing the multiple draft weighing operation shall be maintained at the weighing location and made available to a Sealer upon request.

(d) All weights (gross and tare) shall be determined using the same authorized multiple draft weighing operation. “Gross Only” or “Tare Only” certificates are prohibited from being used when using a multiple draft weighing operation.

(e) The use of predetermined individual tare or common tare weights for pulled vehicles are prohibited when using a multiple draft weighing operation.

(f) A weighmaster shall not use a multiple draft weighing operation if for any reason it appears that the weights so determined may be beyond the tolerance level prescribed in Section 4495(f).

(g) Multiple draft weighing operations may not be used by a weighmaster if a party having a legal or financial interest in the transaction notifies the weighmaster prior to the issuance of the certificate that a multiple draft weighing operation shall not be used.

NOTE: Authority cited: Sections 12027, 12107 and 12735, Business and Professions Code. Reference: Section 12728(d)(2), Business and Professions Code.

4495.4. Certificate Requirements. - When a multiple draft weighing operation is used by a weighmaster to determine the net weight of a product, the following information shall appear on the certificate:

(a) The fact that a multiple draft weighing operation is being used to determine the weights. This shall be designated by the words “Multiple Draft” immediately adjacent to both the gross and tare weights. As of January 1, 2000, the letters “M.D.” may be substituted for the words “Multiple Draft”.

(b) The identification of any connected vehicle not resting on the scale platform during certification.

These requirements are in addition to any other information required by California Business and Professions Code, Division 5, Chapter 7.

NOTE: Authority cited: Sections 12027, 12107 and 12735, Business and Professions Code. Reference: Section 12728(d)(2), Business and Professions Code.

4495.5. Establishment and Tolerance. - Data shall be compiled showing that the method used in the multiple draft weighing operation for the specific location, vehicles, and connected combinations does not introduce or result in errors not in conformance with the requirements of this article when compared to a single draft weighing operation. All testing by the Department shall be consistent with verifying the accuracy of this method. If for any reason the verification testing fails or cannot be performed safely, testing will be terminated until the deficiencies are corrected and the written request for authorization is re-submitted to the Department.

The following procedures shall be used by weights and measures officials for authorizing multiple draft weighing procedures:

(a) The applicant shall provide accessibility to all identified equipment and they shall also provide assistance from trained facility representative(s) during the verification procedures.

(b) All single draft weighings will be performed with the vehicle(s) positioned in approximately the same location on the load-receiving element of the weighing device.

(c) Vehicles shall be tested as used in the normal course of business.

(d) Multiple draft weighings shall be performed in accordance with the applicant's written procedures.

(e) A maximum of 30 single draft and 30 multiple draft net weighments shall be performed for each requested authorization.

(f) At no time shall the net weights determined using a multiple draft weighing operation differ from those using a single draft weighing operation by more than twice the scale tolerance for that net load. A weighment that exceeds the established tolerance shall be sufficient grounds for the Department to deny authorization to use the multiple draft weighing procedure.

The Department shall issue a letter either authorizing use of the multiple draft weighing operation or rejecting the application within 30 days following the completion of verification procedures.

NOTE: Authority cited: Sections 12027, 12107 and 12735, Business and Professions Code. Reference: Section 12728(d)(2), Business and Professions Code.

4495.6. Verification and Enforcement.

(a) When the gross weight or tare weight of a vehicle and connected combination is recorded on a weighmaster certificate, verification of that weight shall be made by reweighing the combination using the same multiple draft weighing operation authorized by the Department. At no time shall the reweigh weight differ from the recorded weight by more than twice the scale tolerance for that weighment.

(b) If a multiple draft weighing operation is found to produce weights that are beyond the established tolerance, the Department shall issue an order stating that the multiple draft weighing operation shall not be used until it is reestablished and reauthorized by the Department.

(c) Only the approved procedure shall be used when using a multiple draft weighing operation.

NOTE: Authority cited: Sections 12027, 12107 and 12735, Business and Professions Code. Reference: Section 12728(d)(2), Business and Professions Code.

Chapter 10. Quantity Control

Article 1. General

4500. Standards for Fresh Berries. - Fresh berries shall be sold by net weight; or by volume in measure containers in specified capacities as follows:

(a) Strawberries--Dry pint (33.6 cubic inches; *net* weight 12 oz.), or dry quart (67.2 cubic inches; *net* weight 1 lb. 6 oz.).

(b) All other berries--Dry pint (33.6 cubic inches; *net* weight 12 oz.), or half dry pint (16.8 cubic inches; *net* weight 8 oz.).

Half dry pints, dry pints, and dry quarts, when sold by volume, shall not be deemed to be packages for labeling purposes.

Berry containers (boxes, baskets or packaging in any manner), whether opened or covered shall not have a false bottom or be constructed as to facilitate deception or fraud.

NOTE: Authority cited: Sections 12027 and 12107.1, Business and Professions Code. Reference: Sections 12107.1 and 12601, Business and Professions Code.

4501. Fish Sale by Weight. - The provisions of Section 12024.5, Chapter 1, Division 5 of the California Business and Professions Code shall apply to the sale or advertisement for sale of fin fish and crustaceans, when sold for human consumption and, when not alive.

NOTE: Authority cited: Sections 12027 and 12609, Business and Professions Code. Reference: Sections 12024.5 and 12024.8, Business and Professions Code.

4502. Wood for Fuel Purposes.

Renumbered to Article 3, Sections 4530 - 4536.2 (3-1-96).

NOTE: Authority cited: Sections 12027 and 12609, Business and Professions Code. Reference: Sections 12024.5 and 12024.8, Business and Professions Code.

4503. Gravimetric Testing of Fluid Products and Products Sold by Count. - Products sold by fluid measure or by count may be tested gravimetrically, by weights and measures officials, using procedures established by the Director. These procedures shall incorporate a statistical sampling plan established by Title 4, Division 9, Chapter 11.

NOTE: Authority cited: Sections 12027, 12608 and 12609, Business and Professions Code. Reference: Sections 12608 and 12609, Business and Professions Code.

[THIS PAGE LEFT INTENTIONALLY BLANK]

INTRODUCTION

as adopted by
The National Conference on Weights and Measures

Background

The Uniform Packaging and Labeling Regulation was first adopted during the 37th National Conference on Weights and Measures in 1952. Reporting to the Conference, the Committee on Legislation stated:

The National Conference should adopt a model package regulation for the guidance of those States authorized to adopt such a regulation under provisions of their weights and measures laws. Since so much of the work of weights and measures officials in the package field concerns food products, the importance of uniformity between the Federal Food and Drug Administration's regulations and any model regulations to be adopted by this Conference cannot be overemphasized.

Since its inception, the Uniform Packaging and Labeling Regulation has been continually revised to meet the complexities of an enormous expansion in the packaging industry--an expansion that, in late 1966, brought about the passage of the Fair Packaging and Labeling Act (FPLA). Recognizing the need for compatibility with the Federal Act, the Committee on Laws and Regulations of the 53rd National Conference in 1968 amended the "Model Packaging and Labeling Regulation" (renamed in 1983) to parallel regulations adopted by Federal agencies under FPLA. The process of amending and revising this Regulation is a continuing one, in order to keep it current with practices in the packaging field and make it compatible with appropriate Federal regulations. Amendments and additions since 1971 are noted at the end of each section.

The revision of 1978 provided for the use of the International System of Units (SI), the metric system, on labels as well as allowing SI-only labels for those commodities not covered by Federal laws or regulations. "SI" means the International System of Units as established in 1960 by the General Conference on Weights and Measures and interpreted or modified for the United States by the Secretary of Commerce. [See Metric Conversion Act of 1975 (Public Law 94-168, § 3(1) and § 4(4), and NIST Special Publication 814 - Metric System of Measurement; Interpretation of the International System of Units for the United States, or the Federal Register of December 20, 1990, (FR 90-21913) or subsequent revisions.] In 1988, Congress amended the Metric Conversion Act of 1975 (see § 5146 of Public Law 100-418) to declare that it is the policy of the United States to designate the International System of Units of measurement as the preferred system of weights and measures for U.S. trade and commerce. In 1992, Congress amended the Federal Fair Packaging and Labeling Act (FPLA) to require the most appropriate units of the SI and the customary inch-pound systems of measurement on certain consumer commodities. The 1993 amendments to NIST Handbook 130 require SI and inch-pound units on certain consumer commodities in accordance with Federal laws or regulations. Requirements for labeling in both units of measure are effective February 14, 1994, under FPLA and as specified in § 15 Effective Date; except as specified in § 11.32. SI Units, Exemptions for Consumer Commodities. SI-only labeling is not permitted on consumer commodities unless specifically required in this regulation or by Federal law or regulation.

Nothing contained in this regulation should be construed to supersede any labeling requirement specified in Federal law or to require the use of SI units on nonconsumer packages.

The National Conference on Weights and Measures is sponsored by the National Institute of Standards and Technology in partial implementation of its statutory responsibility for "cooperation with the States in securing uniformity in weights and measures laws and methods of inspection."

[THIS PAGE LEFT INTENTIONALLY BLANK]

Article 2. Uniform Packaging and Labeling Regulation

4510. This section incorporates the adoption, by reference, of the National Institute of Standards and Technology Handbook 130 "Uniform Packaging and Labeling Regulation" (UPLR).

4511. The following sections of Handbook 130 UPLR are not adopted and are annotated "Not Adopted" in the text:

Section 2.11. Petroleum Products.

Section 6.15. Character of Declaration: Average.

Section 7.6. Character of Declaration: Average.

Section 12. Variation to be Allowed.

Section 13. Retail Sale Price Representations.

Section 14. Revocation of Conflicting Regulations.

Section 15. Effective Date.

4512. These requirements are different than, or in addition to, the requirements of Handbook 130 UPLR. They are shaded, bordered, and numbered in the 4512 series to differentiate them from the Handbook 130 requirements.

[THIS PAGE LEFT INTENTIONALLY BLANK]

Uniform Packaging and Labeling Regulation

Preamble

The purpose of this regulation is to provide accurate and adequate information on packages as to the identity and quantity of contents so that purchasers can make price and quantity comparisons.
(Added 1989)

Section 1. Application

This regulation shall apply to packages, but shall not apply to:

(a) inner wrappings not intended to be individually sold to the customer,

(b) shipping containers or wrapping used solely for the transportation of any commodities in bulk or in quantity to manufacturers, packers, or processors, or to wholesale or retail distributors, but in no event shall this exclusion apply to packages of consumer or nonconsumer commodities, as defined herein,
(Added 1971)

(c) auxiliary containers or outer wrappings used to deliver packages of such commodities to retail customers if such containers or wrappings bear no printed matter pertaining to any particular commodity,

(d) containers used for retail tray pack displays when the container itself is not intended to be sold (e.g., the tray that is used to display individual envelopes of seasonings, gravies, etc., and the tray itself is not intended to be sold), or

(e) open carriers and transparent wrappers or carriers for containers when the wrappers or carriers do not bear any written, printed, or graphic matter obscuring the label information required by this regulation.

This regulation shall not apply to exports for foreign countries.
(Amended 1994)

Section 2. Definitions

2.1. Package. - Except as modified by § 1. Application, the term "package," whether standard package or random package, means any commodity:

(a) enclosed in a container or wrapped in any manner in advance of wholesale or retail sale, or

(b) whose weight (Note 1 see page QC-7) or measure has been determined in advance of wholesale or retail sale. An individual item or lot of any commodity on which there is marked a selling price based on an established price per unit of weight or of measure shall be considered a package or packages.

(Amended 1988, 1991)

NOTE 1: *When used in this regulation, the term "weight" means "mass" (See paragraph I. in Section I. Introduction, of NIST Handbook 130 for an explanation of these terms.)*

2.2. Consumer Package: Package of Consumer Commodity. - A package that is customarily produced or distributed for sale through retail sales agencies or instrumentalities for consumption or use by individuals for the purposes of personal care or in the performance of services ordinarily rendered in or about the household or in connection with personal possessions.
(Amended 1988, 1991)

2.3. Nonconsumer Package: Package of Nonconsumer Commodity. - Any package other than a consumer package, and particularly a package intended solely for industrial or institutional use or for wholesale distribution.
(Amended 1988, 1991)

2.4. Random Package. - A package that is one of a lot, shipment, or delivery of packages of the same consumer commodity with no fixed pattern of net contents.
(Amended 1988, 1990)

2.5. Label. - Any written, printed, or graphic matter affixed to, applied to, attached to, blown into, formed, molded into, embossed on, or appearing upon or adjacent to a consumer commodity or a package containing any consumer commodity, for purposes of branding, identifying, or giving any information with respect to the commodity or to the contents of the package, except that an inspector's tag or other non-promotional matter affixed to or appearing upon a consumer commodity shall not be considered a label requiring the repetition of label information required by this regulation.
(Amended 1988)

2.6. Person. - The term "person" means either singular or plural, and shall include any individual, partnership, company, corporation, association, and society.
(Amended 1988)

2.7. Principal Display Panel or Panels. - That part, or those parts, of a label that is, or are, so designed as to most likely be displayed, presented, shown, or examined under normal and customary conditions of display and purchase. Wherever a principal display panel appears more than once on a package, all requirements pertaining to the "principal display panel" shall pertain to all such "principal display panels."
(Amended 1988)

2.8. Multi-Unit Package. - A package containing two or more individual packages of the same commodity, in the same quantity, intended to be sold as a multi-unit package, but where the component packages are labeled individually in full compliance with all requirements of this regulation.
(Amended 1988)

2.9. Combination Package. - A package intended for retail sale, containing two or more individual packages or units of dissimilar commodities. (Examples: An antiquing or house-cleaning kit; sponge and cleaner; lighter fluid and flints.)
(Added 1989)

2.10. Variety Package. - A package intended for retail sale, containing two or more individual packages or units of similar, but not identical, commodities. Commodities that are generically the same, but that differ in weight, measure, volume, appearance, or quality, are considered similar but not identical. (Examples: 2 sponges of different sizes; plastic tableware, consisting of 4 spoons, 4 knives, and 4 forks.)
(Added 1989)

2.11. Petroleum Products.

[NOT ADOPTED]

2.12. Spot Label. - A spot label is a label, clearly defined by means of a border, indentation, or other means, that covers only a small portion of the surface of a principal display panel of a package; the entire portion of the principal display panel outside the area of the label contains no printed or graphic matter of any kind. A spot label may contain all required labeling information (identity, responsibility, and net contents), but it must at least indicate the identity and net contents. See § 11.29. for net contents placement exemption for a spot label. Also see Figure 1, page QC-8.
(Added 1990; Amended 1991)

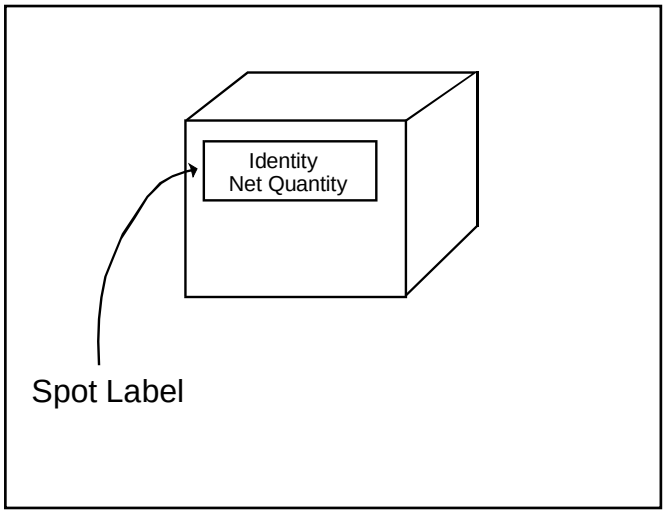

Figure 1.

2.13. Header Strip. - A header label or header strip is a label that is attached across the top of a transparent or opaque bag or other container that bears no other printed or graphic material. See § 11.30. for net contents placement exemptions. Also see Figure 2, page QC-9.
(Added 1990)

2.14. Standard Package. - A package that is one of a lot, shipment, or delivery of packages of the same commodity with identical net contents declarations; for example, l L bottles or 12 fl oz cans of carbonated soda, 500 g or 5 lb bags of sugar, or 100 m packages of rope.
(Added 1991)

2.15. SI or SI Units. – "SI" or "SI Units" means the International System of Units as established in 1960 by the General Conference on Weights and Measures and interpreted or modified for the United States by the Secretary of Commerce. [See Metric Conversion Act of 1975 (Public Law 94-168, § 3 (1) and § 4 (4), and NIST Special Publication 814 - Metric System of Measurement; Interpretation of the International System of Units for the United States or Federal Register of December 20, 1990 (FR 90-21913).]
(Added 1993)

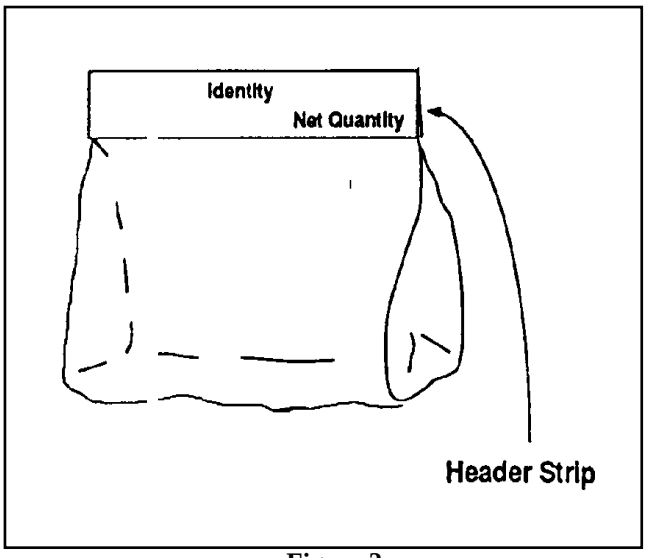

Figure 2.

Section 3. Declaration of Identity: Consumer Package

3.1. Declaration of Identity: Consumer Package. - A separate declaration of identity [NOTE 2, see page QC-9] on a consumer package shall appear on the principal display panel and shall not be misleading or deceptive. The identity shall be in terms of:

(a) the name specified in or required by any applicable Federal or State law or regulation or, in the absence of this,

(b) the common or usual name or, in the absence of this,

(c) the generic name or other appropriate description, including a statement of function (such as "cleaning powder").

(Amended 1990; Footnote added 1986)

NOTE 2: *Section 19.(a) of the Uniform Weights and Measures Law (and 21 CFR 101.100 (b) (3) for non-meat and non-poultry foods) specifically exempts food packages from identity statements if the commodity is a food, other than meat or poultry, that was repackaged in a retail establishment and the food is displayed to the purchaser under either of the following circumstances: (1) its interstate labeling is clearly in view or with a counter card, sign or other appropriate device bearing prominently and conspicuously the common or usual name of the food or (2) the common or usual name of the food is clearly revealed by its appearance.*
(Added 1986) (Amended 2001)

3.1.1. Parallel Identity Declaration: Consumer Package. A declaration of the identity on a consumer package shall appear generally parallel to the base on which the package rests as it is designed to be displayed.

Section 4. Declaration of Identity: Nonconsumer Package

A declaration of identity [NOTE 2, see page QC-9] on a nonconsumer package shall appear on the outside of a package and shall not be misleading or deceptive. The identity shall be in terms of:

(a) the name specified in or required by any applicable Federal or State law or regulation or, in the absence of this,

(b) the common or usual name or, in the absence of this,

(c) the generic name or other appropriate description, including a statement of function (such as "cleaning powder").

(Amended 1990, Note added 1986)

Section 5. Declaration of Responsibility: Consumer and Nonconsumer Packages

Any package kept, offered, or exposed for sale, or sold, at any place other than on the premises where packed shall specify conspicuously on the label of the package the name and address of the manufacturer, packer, or distributor. The name shall be the actual corporate name, or, when not incorporated, the name under which the business is conducted. The address shall include street address, city, state (or country if outside the United States), and ZIP Code (or the mailing code if any, used in countries other than the United States); however, the street address may be omitted if this is shown in a current city directory or telephone directory.

If a person manufactures, packs, or distributes a commodity at a place other than his principal place of business, the label may state the principal place of business in lieu of the actual place where the commodity was manufactured or packed or is to be distributed, unless such statement would be misleading. Where the commodity is not manufactured by the person whose name appears on the label, the name shall be qualified by a phrase that reveals the connection such person has with such commodity, such as "Manufactured for and packed by_____," "Distributed by _____", or any other wording of similar import that expresses the facts.

Section 6. Declaration of Quantity: Consumer Packages

6.1. General. [NOTE 3, See page QC-10] - The International System of Units (SI), known as the metric system and the inch-pound system of weights and measures are recognized as proper systems to be used in the declaration of quantity. Effective February 14, 1994, appropriate units of both systems shall be presented in a declaration of quantity except as specified in § 11.32. SI Units, Exemptions for Consumer Commodities.

(Amended 1985, 1990, 1993)

NOTE 3: *Packages subject to this Section and/or the Federal Fair Packaging and Labeling Act shall be labeled in units of the International System of Units (SI) and the inch-pound system of measure effective February 14, 1994, [except for seed (see § 10.10. Packaged Seed) and camera film and recording tape (see § 11.22. Camera Film, Video Recording Tape, Audio Recording Tape and Other Image and Audio Recording Media Intended for Retail Sale and Consumer Use), and as specified in § 11.32. SI Units, Exemptions - Consumer Commodities]. SI unit may appear first.*
(Added 1982; Amended 1990, 1993)

6.2. Largest Whole Unit. - Where this regulation requires that the quantity declaration be in terms of the largest whole unit, the declaration shall, with respect to a particular package, be in terms of the largest whole unit of weight or measure, with any remainder expressed (following the requirements of § 6.5.2. (a) and § 6.11. Fractions):

(a) SI Units, in decimal fractions of such largest whole unit.

(b) Inch-Pound Units

(1) in common or decimal fractions of such largest whole unit, or

(2) in the next smaller whole unit, or units, with any further remainder in terms of common or decimal fractions of the smallest unit present in the quantity declaration.

6.3. Net Quantity. - A declaration of net quantity of the commodity in the package, exclusive of wrappers and any other material packed with such commodity (except as noted in § 10.3. Aerosols and Similar Pressurized Containers), shall appear on the principal display panel of a consumer package and, unless otherwise specified in this regulation (see § 6.6. through 6.9. Prescribed Units), shall be in terms of the largest whole unit.

6.3.1. Use of "Net Mass" or "Net Weight." - A quantity declaration may stand alone [e.g., "200 g (7 oz)" or "1 lb (453 g)"] or may include the term "net mass" or "net weight" either preceding or following the declaration. The term "net" by itself may be used on food labels. However, the quantity of contents shall always declare the net quantity of contents, even when such terms are not used.
(Amended 1993)

6.3.2. Lines of Print or Type. - A declaration of quantity may appear on one or more lines of print or type.
(Amended 1982)

6.4. Terms: Weight, Liquid Measure, Dry Measure, or Count. - The declaration of the quantity of a particular commodity shall be expressed in terms of:

- weight if the commodity is solid, semisolid, viscous, or a mixture of solid and liquid, or
- liquid measure if the commodity is liquid, or
- dry measure if the commodity is dry, or
- numerical count.

However, if there exists a firmly established general consumer usage and trade custom with respect to the terms used in expressing a declaration of quantity of a particular commodity, such a declaration of quantity may be expressed in its traditional terms, provided such traditional declaration gives accurate and adequate information as to the quantity of the commodity. Any net content statement that does not permit price and quantity comparisons is forbidden.
(Amended 1989)

6.4.1. Combination Declaration.

(a) A declaration of quantity in terms of weight shall be combined with appropriate declarations of the measure, count, and size of the individual units unless a declaration of weight alone is fully informative.

(b) A declaration of quantity in terms of measure shall be combined with appropriate declarations of the weight, count, and size of the individual units unless a declaration of measure alone is fully informative.

(c) A declaration of quantity in terms of count shall be combined with appropriate declarations of the weight, measure, and size of the individual units unless a declaration of count alone is fully informative.
(Added 1971)

6.5. SI Units: Mass, Measure. **[NOTE 3, see page QC-10]** - A declaration of quantity:

(a) in units of mass shall be in terms of the kilogram, gram, or milligram;

(b) in units of liquid measure shall be in terms of the liter or milliliter, and shall express the volume at 20 °C, except in the case of petroleum products or distilled spirits, for which the declaration shall express the volume at 15.6 °C, and except also in the case of a commodity that is normally sold and consumed while frozen, for which the declaration shall express the volume at the frozen

temperature, and except also in the case of malt beverages or a commodity that must be maintained in the refrigerated state, for which the declaration shall express the volume at 4 °C;
(Amended 1985, 1990)

(c) in units of linear measure shall be in terms of the meter, centimeter, or millimeter;

(d) in units of area measure, shall be in terms of the square meter, square decimeters, square centimeter, or square millimeter;

(e) in units of volume other than liquid measure, shall be in terms of the liter and milliliter, except that the terms cubic meter and cubic centimeter shall be used only when specifically designated as a method of sale;

(f) Rule of 1000. The selected multiple or submultiple prefixes for SI units shall result in numerical values between 1 and 1000. This rule allows centimeters or millimeters to be used where a length declaration is less than 100 centimeters. For example: 500 g not 0.5 kg; 1.96 kg not 1960 g; or 750 mL, not 0.75 L, or, 750 mm or 75 cm, not 0.75 m;
(Added 1993)

(g) SI declarations should be shown in three digits except where the quantity is below 100 grams, milliliters, centimeters, square centimeters, or cubic centimeters, where it can be shown in two digits. In either case, any final zero appearing to the right of the decimal point need not be shown.
(Added 1993)

(h) The declaration of net quantity of contents shall not be expressed in mixed units. For example: 1.5 kg, not 1 kg 500 g.
(Added 1993)

6.5.1. Symbols. - Any of the following symbols for SI units, none other, may be employed in the quantity statement on a package of commodity:

centimeter	cm	cubic meter	m^3
cubic centimeter	cm^3	kilogram	kg
meter	m	gram	g
milligram	mg	millimeter	mm
liter	L or l	square meter	m^2
milliliter	mL or ml	cubic decimeter	dm^3
square centimeter	cm^2	square decimeter	dm^2
micrometer	μm		

(a) Symbols [NOTE 4, see page QC-11], except for liter, are not capitalized unless the unit is derived from a proper name. Periods shall not be used after the symbol. Symbols shall always be written in the singular form. Adding "s" to an SI symbol to express the plural of the symbol is prohibited.

(b) The "L" symbol and the "mL" symbol are preferred; however, the "l" symbol for liter and "ml" symbol for milliliter are permitted.
(Amended 1980, 1993)

NOTE 4: *The "e" mark shall not be considered to be a qualifying word or phrase and may be used as part of the statement of the net quantity of contents where warranted. When used, the "e" mark shall be at least 3 millimeters (approximately 1/8 in) in height. The term "e" mark refers to the symbol "e" used in connection with the quantity declarations on labels of some consumer commodities marketed primarily in the European Union (EU). The "e" mark constitutes a representation by the packer or importer that the package to which it is applied has been filled in accordance with the average system of quantity specified by the EU. The average system is a method of declaring package fill in the EU and other countries of the world, including the United States.*
(Added 1993)

6.5.2. Fractions and Prefixes.

(a) Fractions: An SI statement in a declaration of net quantity of contents of any consumer commodity may contain only decimal fractions.

(b) Prefixes: The following chart indicates SI prefixes that may be used on a broad range of consumer commodity labels to form multiples and submultiples of SI units:

Prefix	Symbol	Multiplying Factor*
kilo-	k	x 10^3
deca-**	da	x 10
deci-**	d	x 10^{-1}
centi-***	c	x 10^{-2}
milli-	m	x 10^{-3}
micro-****	μ	x 10^{-6}

* $10^2 = 100$; $10^3 = 1000$; $10^{-1} = 0.1$; $10^{-2} = 0.01$
Thus, 2 kg = 2 x 1000 g = 2000 g and
3 cm = 3 x 0.01 m = 0.03 m
** Not permitted on food labels.
*** Should only be used with "meter."
**** Shall only be used for measurements less than 1 mm.
(Amended 1993)

6.6. Prescribed Units, SI. - [NOTE 3, see page QC-10]

6.6.1. Less than 1 Meter, 1 Square Meter, 1 Kilogram, 1 Cubic Meter, or 1 Liter. - The declaration of quantity shall be expressed as follows:

(a) length measure of less than 1 meter: in centimeters or millimeters;
(Amended 1979)

(b) area measure of less than 1 square meter: in square decimeters and decimal fractions of a square decimeter or in square centimeters and decimal fractions of a square centimeter;

(c) mass of less than 1 kilogram: in grams and decimal fractions of a gram, but if less than 1 gram, then in milligrams;

(d) liquid or dry measure of less than 1 liter: in milliliters;

(e) cubic measure less than 1 cubic meter: in cubic centimeters, or cubic decimeters (liters); [See § 10.14. Cubic Measure in Compressed Form.]
(Added 1993)

provided, the quantity declaration appearing on a random mass package may be expressed in terms of decimal fractions of the largest appropriate unit, the fraction being carried out to not more than three decimal places.
(Amended 1980, 1993)

6.6.2. One Meter, 1 Square Meter, 1 Kilogram, 1 Liter, 1 Cubic Meter, or More. - In the case of:

(a) length measure of 1 meter or more: in meters and decimal fractions to not more than three places;

(b) area measure of 1 square meter or more: in square meters and decimal fractions to not more than three places;

(c) mass of 1 kilogram or more: in kilograms and decimal fractions to not more than three places;

(d) liquid or dry measure of 1 liter or more: in liters and decimal fractions to not more than three places;
(Added 1986; Amended 1993)

(e) cubic measure of 1 cubic meter or more: in cubic meters and decimal fractions to not more than three places (see § 10.14. Cubic Measure in Compressed Form).
(Added 1993)

6.7. Inch-Pound Units: Weight, Measure. - A declaration of quantity:

(a) in units of weight, shall be in terms of the avoirdupois pound or ounce;

(b) in units of liquid measure, shall be in terms of the United States gallon of 231 cubic inches or liquid-quart, liquid-pint, or fluid-ounce subdivisions of the gallon, and shall express the volume at 68 °F except in the case of petroleum products and distilled spirits, for which the declaration shall express the volume at 60 °F, and except also in the case of a commodity that is normally sold and consumed while frozen, for which the declaration shall express the volume at the frozen temperature, and except also in the case of a commodity that must be maintained in the refrigerated state, for which the declaration shall express the volume at 40 °F, and except also in the case of malt beverages, for which the declaration shall express the volume at 39.1 °F;
(Amended 1985, 1990)

(c) in units of linear measure, shall be in terms of the yard, foot, or inch;

(d) in units of area measure, shall be in terms of the square yard, square foot, or square inch;

(e) in units of volume measure, shall be in terms of the cubic yard, cubic foot, or cubic inch; (see § 10.14. Cubic Measure in Compressed Form).

(f) in units of dry measure, shall be in terms of the United States bushel of 2,150.42 cubic inches, or peck, dry-quart, and dry-pint subdivisions of the bushel (see § 10.14. Cubic Measure in Compressed Form).

6.7.1. Symbols and Abbreviations. - Any of the following symbols and abbreviations, and none other, shall be employed in the quantity statement on a package of commodity:

avoirdupois	avdp	ounce	oz
piece	pc	count	ct
pint	pt	cubic	cu
pound	lb	each	ea
feet or foot	ft	quart	qt
fluid	fl	square	sq
gallon	gal	weight	wt
inch	in	yard	yd
liquid	liq	drained	dr
diameter	dia		

A period should not be used after the abbreviation. Abbreviations should be written in singular form; and “s” should not be added to express the plural. (For example,

"oz" is the symbol for both "ounce" and "ounces.") Both upper and lower case letters are acceptable.
(Added 1974; Amended 1980, 1990, 1993)

6.7.2. Units of Two or More Meanings. - When the term "ounce" is employed in a declaration of liquid quantity, the declaration shall identify the particular meaning of the term by the use of the term "fluid"; however, such distinction may be omitted when, by association of terms (for example, as in "1 pint 4 ounces"), the proper meaning is obvious. Whenever the declaration of quantity is in terms of the dry pint or dry quart, the declaration shall include the word "dry."
(Amended 1982)

6.8. Prescribed Units, Inch-Pound System.

6.8.1. Less than 1 Foot, 1 Square Foot, 1 Pound, or 1 Pint. – The declaration of quantity shall be expressed in terms of:

(a) in the case of length measure of less than 1 foot, in inches and fractions of inches;

(b) in the case of area measure of less than 1 square foot, in square inches and fractions of square inches;

(c) in the case of weight of less than 1 pound, in ounces and fractions of ounces;

(d) in the case of liquid measure of less than 1 pint, in fluid ounces and fractions of fluid ounces;

provided, the quantity declaration appearing on a random package may be expressed in terms of decimal fractions of the largest appropriate unit, the fraction being carried out to not more than three decimal places.
(Amended 1984)

6.8.2. 1 Foot, 1 Square Foot, 1 Pound, 1 Pint, 1 Gallon or More. - The declaration of quantity shall be expressed (see § 6.2. Largest Whole Unit and § 6.11. Fractions):

(a) Linear Measure. If 1 foot or more, expressed in terms the largest whole unit (a yard or a foot) with any remainder expressed in inches, and fractions of the inch, or in fractions of the foot or yard, except that it shall be optional to include a statement of length in terms of inches.

(b) Area Measure.

(i) If 1 square foot or more, but less than 4 square feet, expressed in square feet with any, remainder expressed in square inches and fractions of; a square inch or in fractions of a square foot;

(ii) If 4 square feet or more, expressed in terms of the largest whole unit (e.g., square yards or square feet), with any remainder expressed in square inches and fractions of a square inch, or in fractions of the square foot or square yard;

(c) Weight. If 1 pound or more, expressed in terms of the largest whole unit with any remainder expressed in ounces and fractions of an ounce or in fractions of the pound.

(d) Liquid Volume.

(i) If 1 pint or more, but less than 1 gallon, expressed in the largest whole unit (quarts, quarts and pints, or pints, as appropriate) with any remainder expressed in fluid ounces, or fractions of the pint or quart, except that 2 quarts may be declared as one-half gallon and it shall be optional to include an additional expression of net quantity in fluid ounces; or,

(ii) if 1 gallon or more, expressed in terms of the largest whole unit (gallons followed by fractions of a gallon, or by the next smaller whole unit or units, for example, quarts and pints) with any remainder expressed in fluid ounces, or fractions of the pint or quart, except that it shall be optional to include an additional expression of net quantity in fluid ounces.

(e) Dry Measure. If 1 dry pint or more, expressed in terms of the largest whole unit with the remainder expressed in fractions of a dry pint, dry quart, peck, or bushel,

provided, the quantity declaration on a random package may be expressed in decimal fractions of the largest appropriate unit, carried out to not more than three decimal places. (Amended 1993)

6.9. Bidimensional Commodities. - For bidimensional commodities (including roll-type commodities) the quantity declaration shall be expressed in both SI and inch-pound units of measurement as follows:

(a) if the area is less than 929 cm^2 (1 sq ft), in terms of length width (expressed in the largest whole unit for SI and in linear inches and fractions of linear inches for inch-pound) [Example: "20.3 cm x 25.4 cm (8 in x 10 in)"],

(b) if the area is at least 929 cm^2 (1 sq ft) but less than 37.1 dm^2 (4 sq ft), in terms of area (expressed in the largest whole unit for SI and in square inches for inch-pound), followed by a declaration of the length and width, in terms of the largest whole unit [Example: "31 dm 2 (49 cm x 64 cm) 3.36 sq ft (1.6 ft x 2.1 ft)"], *provided*:

(1) for bidimensional commodities having a width of 10 cm (4 in) or less, the declaration of net quantity shall be expressed in terms of width and length in linear measure; no declaration of area is required,

(2) an inch-pound dimension of less than 2 feet may be stated in inches,

(3) commodities consisting of usable individual units (e.g., paper napkins) require a declaration of unit area but not a declaration of total area of all such units (except roll-type commodities with individual usable units created by perforations, for which see § 6.10. Count: Ply), and

(4) for inch-pound declarations, it shall be optional to include, after the statement of the linear dimensions in the largest whole unit, a parenthetical declaration of the same dimensions in inches. [Example: "25 sq ft (12 in x 8.33 yd) (12 in x 300 in)"]

(c) if the area is 37.1 dm^2 (4 sq ft) or more, in terms of area (expressed in the largest whole unit for SI and in square feet for inch-pound), followed by a declaration of the length and width, in terms of the largest whole unit, *provided*:

(1) no declaration of area is required for a bidimensional commodity with a width of 10 cm (4 in) or less,

(2) for bidimensional commodities with a width of 10 cm (4 in) or less, the inch-pound statement of width shall be expressed in terms of linear inches and fractions thereof, and length shall be expressed in the largest whole unit (yard or foot) with any remainder in terms of fractions of the yard or foot, except that it shall be optional to express the length in the largest whole unit followed by a statement of length in inches or to express the length in inches followed by a statement of length in the largest whole unit. [Examples:

"5 cm x 9.14 m (2 in x 10 yd)," or
"5 cm x 9.14 m (2 in x 10 yd) (360 in)," or
"5 cm x 9.14 m (2 in x 360 in) (10 yd)"],

(3) an inch-pound dimension of less than 2 feet may be stated in inches, and

(d) no declaration of area is required for commodities for which the length and width measurements are critical in terms of end use (such as wallpaper border) if such commodities clearly present the length and width measurements on the label.

6.10. Count: Ply. - If the commodity is in individually usable units of one or more components or plies, the quantity declaration shall, in addition to complying with other applicable quantity declaration requirements of this regulation, include the number of plies and total number of usable units.

Roll-type commodities, when perforated so as to identify individual usable units, shall not be deemed to be made up of usable units; however, such roll-type commodities shall be labeled in terms of:

(a) total area measurement,

(b) number of plies,

(c) count of usable units, and

(d) dimensions of a single usable unit.
(Amended 1988)

6.11. Fractions

(a) Inch-Pound: An inch-pound statement of net quantity of contents of any consumer commodity may contain common or decimal fractions. A common fraction shall be in terms of halves, quarters, eighths, sixteenths, or thirty-seconds, except that:

(1) if there exists a firmly established general consumer usage and trade custom of employing different common fractions in the net quantity declaration of a particular commodity, they may be employed, and

(2) if linear measurements are required in terms of yards or feet, common fractions may be in terms of thirds.

(b) Common fractions: A common fraction shall be reduced to its lowest term. (Example: 2/4 becomes 1/2)

(c) Decimal fractions: A decimal fraction shall not be carried out to more than three places.
(Amended 1986, Amended 1993)

6.12. Supplementary Quantity Declarations. - The required quantity declaration may be supplemented by one or more declarations of weight, measure, or count, such declaration appearing other than on a principal display panel. Such supplemental statement of quantity of contents shall not include any term qualifying a unit of weight, measure, or

count that tends to exaggerate the amount of commodity contained in the package (e.g., "giant" quart, "larger" liter, "full" gallon, "when packed," "minimum," or words of similar import).

6.13. Rounding. [Note 5, see page QC-15] - In all conversions for the purpose of showing an equivalent SI or inch-pound quantity to a rounded inch-pound or SI quantity, or in calculated values to be declared in the net quantity statement, the number of significant digits retained must be such that accuracy is neither sacrificed nor exaggerated. Conversions, the proper use of significant digits, and rounding must be based on the packer's knowledge of the accuracy of the original measurement that is being converted. In no case shall rounded net contents declarations overstate a quantity; the packer may round converted values down to avoid overstating the net contents. (Amended 1993)

NOTE 5: *When as a result of rounding SI or customary inch-pound declarations calculated based on the conversion factors in Appendix A, the resulting declarations are not exact, the largest number will be used for enforcement purposes to determine whether a package contains at least the declared amount of the product.*

6.14. Qualification of Declaration Prohibited. - In no case shall any declaration of quantity be qualified by the addition of the words "when packed," "minimum," or "not less than," or any words of similar import, nor shall any unit of weight, measure, or count be qualified by any term (such as "jumbo," "giant," "full," or the like) that tends to exaggerate the amount of commodity.

6.15. Character of Declaration: Average.

[NOT ADOPTED]

6.16. Random Packages. – A random weight package must bear a label conspicuously declaring:

(a) The net weight,

(b) unit price, and

(c) the total price.

In the case of a random package packed at one place for subsequent sale at another, neither the price per unit of weight nor the total selling price need appear on the package, *provided* the package label includes both such prices at the time it is offered or exposed for sale at retail.
(Added 1999)

Section 7. Declaration of Quantity: Nonconsumer Packages

7.1. General. - The SI and inch-pound systems of weights and measures are recognized as proper systems to be used in the declaration of quantity. Units of both systems may be combined in a dual declaration of quantity. [NOTE 6, see page QC-15] (See § 6.3. Net Quantity and § 6.3.1. Use of "Net Mass" or "Net Weight.")

NOTE 6: *Although nonconsumer packages under this Regulation may bear SI declarations only, this Regulation should not be construed to supersede any labeling requirement specified in Federal law.*

7.2. Location. - A nonconsumer package shall bear on the outside a declaration of the net quantity of contents. Such declaration shall be in terms of the largest whole unit (see § 6.2. Largest Whole Unit; for small packages, see § 11.16. Small Packages).

7.3. Terms: Weight, Liquid Measure, Dry Measure, or Count. - The declaration of the quantity of a particular commodity shall be expressed in terms of liquid measure if the commodity is liquid, or in terms of dry measure if the commodity is dry, or in terms of weight if the commodity is solid, semisolid, viscous, or a mixture of solid and liquid, or in terms of numerical count. However, if there exists a firmly established general consumer usage and trade custom with respect to the terms used in expressing a declaration of quantity of a particular commodity, such declaration of quantity may be expressed in its traditional terms, if such traditional declaration gives accurate and adequate information as to the quantity of the commodity.

7.4. SI Units: Mass, Measure. - A declaration of quantity:

(a) in units of mass, shall be in terms of the kilogram, gram, or milligram;

(b) in units of liquid measure, shall be in terms of the liter or milliliter, and shall express the volume at 20 °C, except in the case of petroleum products or distilled spirits, for which the declaration shall express the volume at 15.6 °C, and except also in the case of a commodity that is normally sold and consumed while frozen, for which the declaration shall express the volume at the frozen temperature, and except also in the case of malt beverages or a commodity that is normally sold in the refrigerated state, for which the declaration shall express the volume at 4 °C;
(Amended 1985)

(c) in units of linear measure, shall be in terms of the meter, centimeter, or millimeter;

(d) in units of area measure, shall be in terms of the square meter, square decimeter, square centimeter or square millimeter;

(e) in units of volume other than liquid measure, shall be in terms of the liter and milliliter, except that the terms cubic meter, cubic decimeter and cubic centimeter will be used only when specifically designated as a method of sale.

(f) Rule of 1000. The selected multiple or submultiple prefixes for SI units shall result in numerical values between 1 and 1000. This rule allows centimeters or millimeters to be used where a length declaration is less than 100 centimeters. For example: 500 g not 0.5 kg; 1.96 kg not 1960 g; or 750 mL, not 0.75 L, or, 750 mm or 75 cm, not 0.75 m;
(Added 1993)

(g) SI declarations should be shown in three digits except where the quantity is below 100 grams, milliliters, centimeters, square centimeters, or cubic centimeters, where it can be shown in two digits. In either case, any final zero appearing to the right of the decimal point need not be shown.
(Added 1993)

(h) The declaration of net quantity of contents shall not be expressed in mixed units. For example: 1.5 kg, not 1 kg 500 g.

7.4.1. Symbols. - Only those symbols as detailed in § 6.5.1. Symbols, and none other, may be employed in the quantity statement on a package of commodity.

7.5. Inch-Pound Units: Weight, Measure. - A declaration of quantity:

(a) in units of weight, shall be in terms of the avoirdupois pound or ounce;

(b) in units of liquid measure, shall be in terms of the United States gallon of 231 cubic inches or liquid-quart, liquid-pint, or fluid-ounce subdivisions of the gallon, and shall express the volume at 68 °F except in the case of petroleum products or distilled spirits, for which the declaration shall express the volume at 60 °F, and except also in the case of a commodity that is normally sold and consumed while frozen, for which the declaration shall express the volume at the frozen temperature, and except also in the case of a commodity that is normally sold in the refrigerated state, for which the declaration shall express the volume at 40 °F, and except also in the case of malt beverages, for which the declaration shall express the volume at 39.1 °F;
(Amended 1985)

(c) in units of linear measure, shall be in terms of the yard, foot, or inch;

(d) in units of area measure, shall be in terms of the square yard, square foot, or square inch;

(e) in units of volume measure, shall be in terms of the cubic yard, cubic foot, or cubic inch;

(f) in units of dry measure, shall be in terms of the United States bushel of 2,150.42 cubic inches, or peck, dry-quart, and dry-pint subdivisions of the bushel.

7.5.1. Symbols and Abbreviations. - Any generally accepted symbol and abbreviation of a unit name may be employed in the quantity statement on a package of commodity. (For commonly accepted symbols and abbreviations, see § 6.7.1. Symbols and Abbreviations.)

7.6. Character of Declaration: Average.

[NOT ADOPTED]

Section 8. Prominence and Placement: Consumer Packages

8.1. General. - All information required to appear on a consumer package shall appear thereon in the English language and shall be prominent, definite, and plain, and shall be conspicuous as to size and style of letters and numbers and as to color of letters and numbers in contrast to color of background. Any required information that is either in hand lettering or hand script shall be entirely clear and equal to printing in legibility.

8.1.1. Location. - The declaration or declarations of quantity of the contents of a package shall appear in the bottom 30 percent of the principal display panel or panels. For cylindrical containers, see also § 10.7. for additional requirements. For small packages, see § 11.16.
(Amended 1975)

8.1.2. Style of Type or Lettering. - The declaration or declarations of quantity shall be in such a style of type or lettering as to be boldly, clearly, and conspicuously presented with respect to other type, lettering, or graphic material on the package, except that a declaration of net quantity blown, formed, or molded on a glass or plastic surface is permissible.

8.1.3. Color Contrast. - The declaration or declarations of quantity shall be in a color that contrasts conspicuously with its background, except that a declaration of net quantity blown, formed, or molded on a glass or plastic surface shall not be required to be presented in a contrasting color if no required label information is on the surface in a contrasting color.

8.1.4. Free Area. - The area surrounding the quantity declaration shall be free of printed information:

(a) above and below, by a space equal to at least the height of the lettering in the declaration, and

(b) to the left and right, by a space equal to twice the width of the letter "N" of the style and size of type used in the declaration.

8.1.5. Parallel Quantity Declaration. - The quantity declaration shall be presented in such a manner as to be generally parallel to the declaration of identity and to the base on which the package rests as it is designed to be displayed.

8.2. Calculation of Area of Principal Display Panel for Purposes of Type Size. - The area of the principal display panel shall be:

(a) in the case of a rectangular container, one entire side that properly can be considered to be the principal display panel, the product of the height times the width of that side;

For Figure 3, page QC-17, the area of the principal display panel is 20 cm (8 in) x 15 cm (6 in) = 300 cm^2 (48 sq in)

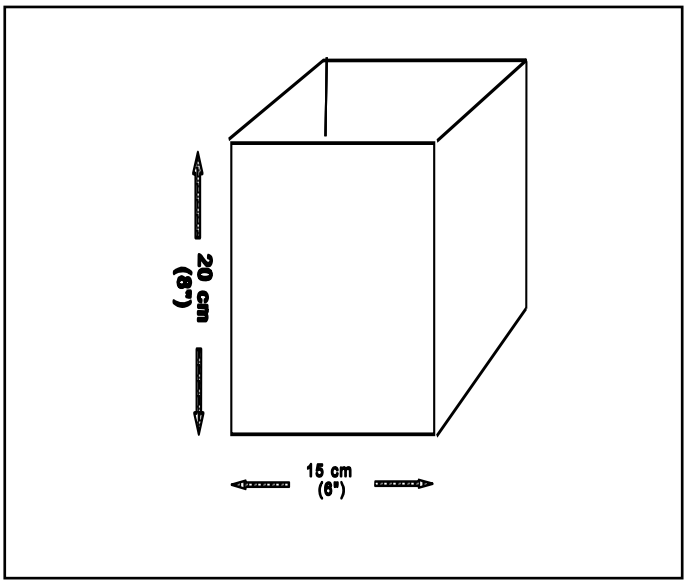

Figure 3.

(b) in the case of cylindrical or nearly cylindrical container, 40 percent of the product of the height of the container times the circumference;

For Figure 4, page QC-17, the area of the principal display panel is: 25 cm (10 in) x 5 cm (2 in) = 125 cm (20 sq in) x 0.40 = 50 cm^2 (8 sq in). See also § 10.7. Cylindrical Containers.

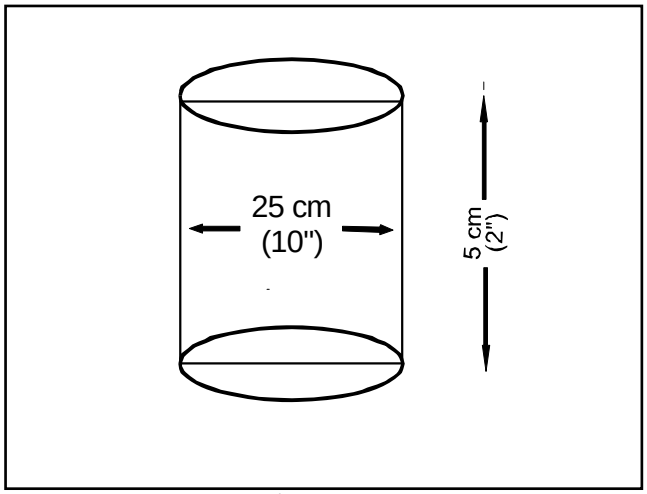

Figure 4.

For Figure 5, see page QC-17.

The area of the principal display panel is the same in both examples. The declaration of net quantity of contents must be of the same height in both cases. It is not the size of the label that is used to determine the minimum type size of the quantity statement, but the size of the surface of the package exposed to view to the customer. The package on the right side of the figure has a spot label; see § 2.12. and § 11.29.

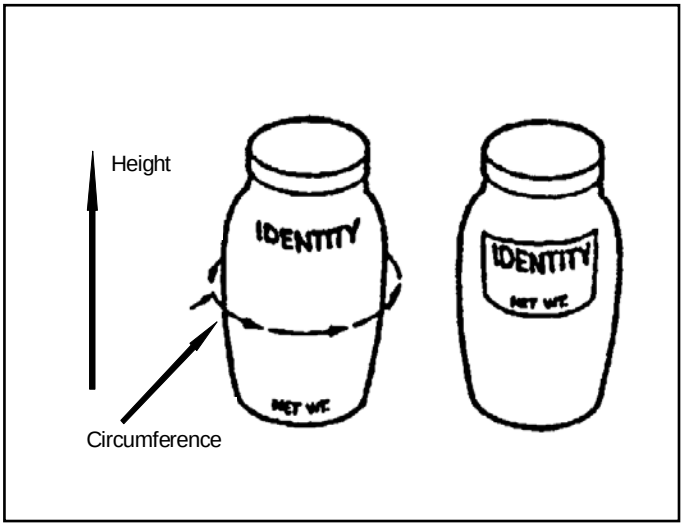

Figure 5.

(c) in the case of any other shaped container, 40 percent of the total surface of the container, unless such container presents an obvious principal display panel (e.g., the top of a triangular or circular package of cheese, or the top of a can of shoe polish), in which event the area shall consist of the entire such surface.

Determination of the principal display panel shall exclude tops, bottoms, flanges at tops and bottoms of cans, and shoulders and necks of bottles or jars.

8.2.1. Minimum Height of Numbers and Letters. - The height of any letter or number in the required quantity declaration shall be not less than that shown in Table 1 on page QC-18, with respect to the area of the panel, and the height of each number of a common fraction shall meet one-half the minimum height standards. When upper and lower case, or all lowercase letters are used in SI symbols, it is the uppercase "L," lowercase "d," or their equivalent in the print or type that shall meet the minimum height requirement. However, no letter shall be less than 1.6 mm (1/16 in) in height. Other letters and exponents must be presented in the same type style and in proportion to the type size used.
(Amended 1993)

8.2.2. Numbers and Letters: Proportion. - No number or letter shall be more than three times as high as it is wide.

Section 9. Prominence and Placement: Nonconsumer Packages

9.1. General. - All information required to appear on a nonconsumer package shall be definitely and clearly stated thereon in the English language. Any required information that is either in hand lettering or hand script shall be entirely clear and equal to printing in legibility.

Section 10. Requirements: Specific Consumer Commodities, Nonconsumer Commodities, Packages, Containers

(Title amended 1979)

10.1. Display Card Package. - For an individual package affixed to a display card, or for a commodity and display card together comprising a package, the type size of the quantity declaration is governed by the dimensions of the display card.

10.2. Eggs. - When cartons containing 12 eggs have been designed so as to permit division in half by the retail purchaser, the required quantity declaration shall be so positioned as to have its context destroyed when the carton is divided.

10.3. Aerosols and Similar Pressurized Containers. - The declaration of quantity on an aerosol package, and on a similar pressurized package, shall disclose the net quantity of the commodity (including propellant), in terms of weight, that will be expelled when the instructions for use as shown on the container are followed.

Table 1. Minimum Height of Numbers and Letters

Area of principal display panel	Minimum height of numbers and letters	Minimum height: label information blown, formed, or molded on surface on container
≤ 32 cm^2 (5 sq in)	1.6 mm (1/16 in)	3.2 mm (1/8 in)
> 32 cm^2 (5 sq in) ≤ 161 cm^2 (25 sq in)	3.2 mm (1/8 in)	4.8 mm (3/16 in)
> 161 cm^2 (25 sq in) ≤ 645 cm^2 (100 sq in)	4.8 mm (3/16 in)	6.4 mm (1/4 in)
> 645 cm^2 (100 sq in) ≤ 2581 cm^2 (400 sq in)	6.4 mm (1/4 in)	7.9 mm (5/16 in)
> 2581 cm^2 (400 sq in)	12.7 mm (1/2 in)	14.3 mm (9/16 in)

Symbols: $\leq$ means less than or equal to; $<$ means less than; $>$ means greater than
Note: The type size requirements specified in this table do not apply to the "e" mark. See Note 4 on page QC-11.

10.4. Multi-Unit Packages. [NOTE 7, see page QC-19] - Any package containing more than one individual "commodity in package form" (see § 2.1. Package) of the same commodity shall bear on the outside of the package a declaration of:

(a) the number of individual units,

(b) the quantity of each individual unit, and

(c) the total quantity of the contents of the multi-unit package. [Example: Soap bars, "6 Bars, Net Wt 100 g (3.53 oz) each; Total Net Wt 600 g (1.32 lb)".]

The term "total" or the phrase "total contents" may precede the quantity declaration.

A multi-unit package containing unlabeled individual packages which are not intended for retail sale separate from the multi-unit package may contain, in lieu of the requirements of section (a), a declaration of quantity of contents expressing the total quantity of the multi-unit package without regard for inner packaging. For such multi-unit packages it shall be optional to include a statement of the number of individual packages when such a statement is not otherwise required by the regulations.

Examples:

Deodorant Cakes: "5 Cakes, Net Wt 113 g (4 oz) each, Total Net Wt 566 g (1.25 lb)" or "5 Cakes, Total Net Wt 566 g (1 lb 4 oz)"

Soap Packets: "10 Packets, Net Wt 56.6 g (2 oz) each, Total Net Wt 566 g (1.25 lb)" or "Net Wt 566 g (1 lb 4 oz)" or "10 Packets, Total Net Wt 566 g (1 lb 4 oz)"
(Amended 1993)

NOTE 7: *For foods, a "multi-unit" package means a package containing two or more individually packaged units of the identical commodity in the same quantity, intended to be sold as part of the multi-unit package but labeled to be individually sold in full compliance with this regulation. Open multi-unit retail food packages under the authority of the Food and Drug Administration or the U.S. Department of Agriculture that do not obscure the number of units or prevent examination of the labeling on each of the individual units are not required to declare the number of individual units or the total quantity of contents of the multi-unit package, if the labeling of each individual unit complies with requirements so that it is capable of being sold individually. (See also § 11.11. Soft-Drink Bottles and 11.12. Multi-Unit Soft-Drink Bottles.)*
(Added 1984)

10.5. Combination Packages. - A combination package is a package intended for retail sale, containing two or more individual packages or units of dissimilar commodities. The declaration of net quantity for a combination package shall contain an expression of weight, volume, measure, or count or a combination thereof, as appropriate, for each individual package or unit, *provided* the quantity statements for identical packages or units shall be combined. This section does not apply to food or other commodities subject to the Federal Food, Drug, and Cosmetic Act (21 USC).

Examples:

(1) Lighter Fluid and Flints:

2 cans - lighter fluid - each 236 mL (8 fl oz)
1 package - 8 flints

(2) Sponges and Cleaner:

2 sponges - each 10 cm x 15 cm x 2.5 cm
(4 in x 6 in x 1 in)
1 box cleaner - Net Mass 170 g (6 oz)

(3) Picnic Pack:

20 spoons, 10 knives, and 10 forks
10 2-ply napkins 25 cm x 25 cm (10 in x 10 in)
10 cups - 177 mL (6 fl oz)
(Amended 1993)

10.6. Variety Packages. - A variety package is a package intended for retail sale, containing two or more individual packages or units of similar but not identical commodities. Commodities that are generically the same but that differ in weight, measure, volume, appearance, or quality are considered similar but not identical. This section does not apply to foods or other commodities subject to the Federal Food, Drug, and Cosmetic Act (21 USC). The declaration of net quantity for a variety package will be expressed as follows:

(1) The number of units for each identical commodity followed by the weight, volume, or measure of that commodity;

(2) The total quantity by weight, volume, measure, and count, as appropriate, of the variety package. The statement of total quantity shall appear as the last item in the declaration of net quantity and shall not be of greater prominence than other terms used.

Examples:

(1) 11 Sponges 11 cm x 20.3 cm x 1.9 cm
(4 in x 8 in x 3/4 in)
14 Sponges 5.7 cm x 10 cm x 1.2 cm (2 1/4 in x 4 in x 1/2 in)

Total: 25 Sponges

(2) 2 Soap Bars 85 g (3 oz) ea
1 Soap Bar 142 g (5 oz)

Total: 3 Soap Bars 312 g (11 oz)

(3) Liquid Shoe Polish
1 Brown 89 mL (3 fl oz)
1 Black 89 mL (3 fl oz)
1 White 148 mL (5 fl oz)

Total: 326 mL (11 fl oz)

(4) Picnic Ware
34 spoons
33 forks
33 knives

Total: 100 pieces
(Amended 1993)

When individual units in a variety package are either packaged or labeled, and are intended for retail sale as individual units, each unit shall be labeled in compliance with the applicable sections of this regulation.

10.7. Cylindrical Containers. - In the case of cylindrical or nearly cylindrical containers, information required to appear on the principal display panel shall appear within that 40 percent of the circumference which is most likely to be displayed, presented, shown, or examined under customary conditions of display for retail sale.

10.8. Measurement of Container-Type Commodities, How Expressed.

10.8.1. General. - Commodities designated and sold at retail to be used as containers for other materials or objects, such as bags, cups, boxes, and pans, shall be labeled with the declaration of net quantity as follows:

(a) For bag-type commodities, in terms of count followed by linear dimensions of the bag (whether packaged in a perforated roll or otherwise). The linear dimensions shall be expressed:

(i) in SI units: in millimeters or centimeters, except that a dimension of 1 meter or more will be expressed in meters with the remainder in terms of decimal fractions of the meter; and

(ii) in inch-pound units: in inches, except that a dimension of 2 feet or more will be expressed in feet with any remainder in terms of inches or common or decimal fractions of the foot.

(1) When the unit bag is characterized by two dimensions because of the absence of a gusset, the width and length will be stated. [Examples: “25 bags, 12.7 cm x 10 cm (5 in x 4 in)” or “50 bags, 75 cm x 1.2 m (2.5 ft x 3.9 ft)”.]

(2) When the unit bag is gusseted, the dimensions will be expressed as width, depth, and length. [Examples: “25 Bags, 43 cm x 10 cm x 50 cm (17 in x 4 in x 20 in)” or “100 Bags, 50.8 cm x 30.4 cm x 76.2 cm (20 in x 12 in x 2-1/2 ft)”.]

(b) For other square, oblong, rectangular, or similarly shaped containers, in terms of count followed by length, width, and depth, except depth need not be listed when less than 5 centimeters or 2 inches. The linear dimensions shall be expressed as specified in § 10.8.1.(a). For bag-type commodities [Example: “2 pans, 20 cm x 20 cm (8 in x 8 in)”].

(c) For circular or other generally round-shaped containers, except cups and the like, in terms of count followed by diameter and depth, except depth need not be listed when less than 5 centimeters or 2 inches. [Example: “4 pans, 20 cm (8 in) diameter x 10 cm (4 in)”.]

(d) Cups - Notwithstanding the above requirements, the net quantity statement for containers such as cups will be listed in terms of count and liquid capacity per unit. [Example: “24 Cups, 177 mL (6 fl oz) capacity”.]

10.8.2. Capacity. - When the functional use of the container is related by label references in standard terms of measure to the capability of holding a specific quantity of substance or class of substances such references shall be a part of the net quantity statement and shall specify capacity as follows:

(a) In SI units: in terms of volume for all containers and liners. The expressed capacity will be stated in terms of milliliters, except that a quantity of 1 liter or more shall be expressed in liters with the remainder in terms of decimal fractions of the liter; and

(b) In inch-pound units:

(1) In terms of liquid measure for containers that are intended to be used for liquids, semi-solids, viscous materials, or mixtures of solids and liquids. The expressed capacity will be stated in terms of the largest whole unit (gallon,

quart, pint, fluid ounce) with any remainder in terms of common or decimal fractions of that unit. [Example: Freezer Boxes – "4 Boxes, 946 mL capacity, 15 cm x 15 cm x 10 cm (1 qt capacity, 6 in x 6 in x 4 in)".]

(2) In terms of dry measure for containers that are intended to be used for solids. The expressed capacity will be stated in terms of the largest whole unit (bushel, peck) with any remainder in terms of common or decimal fractions of that unit. [Example: Leaf Bags – "8 bags, 211 L capacity, 1.21 m x 1.52 m (6 bu capacity, 4 ft x 5 ft)".]

(3) Where containers are used as liners for other more permanent containers, in the same terms as are normally used to express the capacity of the more permanent containers. [Example: Garbage Can Liners – "10 Liners, 76.2 cm x 93.9 cm, fits up to 113 L cans (2 ft 6 in x 3 ft 1 in, fits up to 30 gal cans)".]

10.8.3. Terms. - For purposes of this section, the use of the terms "capacity," "diameter," and "fluid" is optional.

10.9. Textile Products, Threads, and Yarns.

10.9.1. Wearing Apparel. - Wearing apparel (including nontextile apparel and accessories such as leather goods and footwear) sold as single-unit items, or if normally sold in pairs (such as hosiery, gloves, and shoes) sold as single-unit pairs, shall be exempt from the requirements for a net quantity statement by count, as required by § 6.4. Terms: Weight, Liquid Measure, Dry Measure, or Count, of this regulation.

10.9.2. Textiles. - Bedsheets, blankets, pillowcases, comforters, quilts, bedspreads, mattress covers and pads, afghans, throws, dresser and other furniture scarfs, table-cloths and napkins, flags, curtains, drapes, dishtowels, dishcloths, towels, face cloths, utility cloths, bath mats, carpets and rugs, pot holders, fixture and appliance covers, non-rectangular diapers, slip covers, etc., shall be exempt from the requirements of § 6.9. Bidimensional Commodities, of this regulation, *provided*:

(a) The quantity statement for fitted sheets and mattress covers shall state, in centimeters and inches, the length and width of the mattress for which the item is designed, and the size designation of the mattress, if the item is intended to fit a mattress identified as "twin," "double," "queen," "king," "California king," etc. [Example: "Double sheet for 137 cm x 190 cm (54 in x 75 in) mattress".]
(Amended 1987)

(b) The quantity statement for flat sheets shall state, in centimeters and inches, the length and width of the mattress for which the sheet is designed, followed in parentheses by a statement, in centimeters and inches, of the length and width of the finished sheet. The quantity statement shall also state the size designation of the mattress for which the sheet is designed, such as "twin," "double," "queen," "king," "California king," if the item is intended to fit such a mattress. [Example: "Twin Flat Sheet for 99 cm x 190 cm (39 in x 75 in) mattress 167 cm x 244 cm (66 in x 96 in) finished size".]
(Amended 1987)

(c) The quantity statement for pillowcases shall state, in centimeters and inches, the length and width of the pillow for which the pillowcase is designed, followed in parentheses by a statement, in centimeters and inches of the length and width of the finished pillow-case. The quantity statement for pillowcases shall also state the size designation of the pillow for which the pillowcase is designed, e.g., "youth," "standard," "queen," etc., if the item is intended to fit such pillows. [Example: "Standard Pillowcase for 51 cm x 66 cm (20 in x 26 in) pillow, 51 cm x 76 cm (20 in x 30 in) in finished size".]
(Amended 1977, 1987)

(d) The quantity statement for blankets, comforters, quilts, bedspreads, mattress pads, afghans, and throws shall state, in centimeters and inches, the length and width of the finished item. The quantity statement shall also state the length of any ornamentation and the size designation of the mattress for which the item is designed, if it is intended to fit, for example, a "twin," "double," "queen," "king," or "California King," etc., mattress.
(Amended 1988)

(e) The quantity statement for tablecloths and napkins shall state, in centimeters and inches, the length and width of the finished item. The quantity statement also may state parenthetically, in centimeters and inches, the length and width of the item before hemming and properly identified as such.

(f) The quantity statement for curtains, drapes, flags, furniture scarfs, etc., shall state, in centimeters and inches, the length and width of the finished item. The quantity statement also may state parenthetically, in centimeters and inches, the length of any ornamentation.

(g) The quantity statement for carpets and rugs shall state, in meters and feet, with any remainder in decimal fractions of the meter for SI sizes or common or decimal fractions of the foot or in inches for inch-pound sizes, the length and width of the item. The quantity statement also may state parenthetically, in centimeters and inches, the length of any ornamentation.

(h) The quantity statement for woven dish towels, dish cloths, towels, face cloths, utility cloths, bath mats, etc., shall state, in centimeters and inches, the length and width of the item. The quantity statement for such items, when knitted, need not state the dimensions.

(i) The quantity statement for textile products such as pot holders, fixture and appliance covers, slip covers, nonrectangular diapers, etc., shall be stated in terms of count and may include size designations and dimensions.

(j) The quantity statement for other than rectangular textile products identified in section (a) through (h) shall state the geometric shape of the product and the dimensions that are customarily used in describing such geometric shape. (Examples: "Round scarf: 190 cm (74 in) in diameter;" "Oval Tablecloth 177 cm x 254 cm (70 in x 100 in)" representing the maximum length and width in this case.)

(k) The quantity statement for packages of remnants of textile products of assorted sizes, when sold by count, shall be accompanied by the term "irregular dimensions" and the minimum size of such remnants. (Added 1971)

10.9.3. Sewing Threads, Handicraft Threads, and Yarns. - Sewing and handicraft threads shall be labeled as follows:

(a) The net quantity statement for sewing and handicraft threads shall be expressed in terms of meters and yards.

(b) The net quantity statement for yarns shall be expressed in terms of mass or weight.

(c) Thread products may, in lieu of name and address, bear a trademark, symbol, brand, or other mark that positively identifies the manufacturer, packer, or distributor, provided such marks, employed to identify the vendor, shall be filed with the director.

(d) Each unit of industrial thread shall be marked to show its net length in terms of meters and yards or its net weight in terms of kilograms or grams and avoirdupois pounds or ounces, except that ready-wound bobbins that are not sold separately shall not be required to be individually marked to show the number of bobbins contained therein and the net meters and yards of thread on each bobbin.

10.10. Packaged Seed. - Packages of seeds intended for planting, weighing less than 225 grams or 8 ounces, shall be labeled in full accord with this regulation except as follows:

(a) The quantity statement shall appear in the upper 30 percent of the principal display panel.

(b) The quantity statement shall be in terms of:

(1) the largest whole SI unit for all packages with weights up to 7 grams, and

(2) in grams and ounces for all other packages with weights less than 225 grams or 8 ounces.

(Amended 1995)

(c) The quantity statement for coated seed, encapsulated seed, pelletized seed, preplanters, seed tapes, etc., shall be in terms of count.

(Added 1972; Amended 1975, 1993)

10.11. Statements of Cubic Measure in Compressed Form. When the content declaration on a commodity sold in compressed form is stated in terms of cubic measure, an additional statement may indicate the amount of material from which the final product was compressed. The amount in such statement shall not exceed the actual amount of material that can be recovered.
(Added 1993)

Section 11. Exemptions [Note 8 see page QC-23]

NOTE 8: *Section 11. Exemptions includes several requirements that refer only to the historic use of inch-pound units or are direct restatements of exemptions contained in Federal Laws or regulations which do not include SI units. SI equivalents are omitted in most of these requirements because the SI units would not be meaningful or useful.*
(Added 1993) (Amended 1995)

11.1. Random Packages. - A random package bearing a label conspicuously declaring:

(a) the net weight,
(b) unit price, and
(c) the total price

shall be exempt from the SI units, type size, location, and free area requirements of this regulation. In the case of a random package packed at one place for subsequent sale at another, neither the price per unit of weight nor the total selling price need appear on the package, *provided* the package label includes both such prices at the time it is offered or exposed for sale at retail.

This section shall also apply to uniform weight packages of fresh fruit or vegetables labeled by count, in the same manner and by the same type of equipment as random packages exempted by this section, and cheese and cheese products labeled in the same manner and by the same type of equipment as random packages exempted by this section.
(Amended 1989)

11.1.1 Indirect Sale of Random Packages. - A random package manufactured or produced and offered for indirect sale (e.g., e-commerce, on-line, phone, fax, catalog, and similar methods) shall be exempt from the labeling requirements of:

(a) unit price
(b) total price

when the following requirements are met:

At the time of the delivery, each package need only bear a statement of net weight, provided that:

(a) The unit price is set forth and established in the initial product offering;

(b) The maximum possible net weight, unit price, and maximum possible price are provided to the customer by order confirmation when the product is ordered; and

(c) When the product is delivered, the customer receives a receipt bearing the following information: identity, declared net weight, unit price, and the total price.

Indirect Sales: For the purpose of Section 11.1.1., "Indirect sales" include all forms of sales where the customer is not physically present at the time and location of product selection and order. Examples of such indirect methods include, without limitation, Internet or on-line sales, sales conducted by telephone or facsimile, and catalog sales.
(Added 2001)

11.2. Small Confections. - Individually wrapped pieces of "penny candy" and other confectionery of less than 15 grams or 1/2 ounce net weight per individual piece shall be exempt from the labeling requirements of this regulation when the container in which such confectionery is shipped is in conformance with the labeling requirements of this regulation. Similarly, when such confectionery items are sold in bags or boxes, such items shall be exempt from the labeling requirements of this regulation, including the required declaration of net quantity of contents, when the declaration of the bag or box meets the requirements of this regulation.

11.3. Small Packages of Meat or Meat Products. - Individually wrapped and labeled packages of meat or meat products of less than 15 grams or 1/2 ounce net weight, which are in a shipping container, need not bear a statement of the net quantity of contents when the statement of the net quantity of contents on the shipping container is in conformance with the labeling requirements of this regulation.
(Added 1987)

11.4. Individual Servings. - Individual serving-size packages of foods containing less than 15 grams or 1/2 ounce or less than 15 milliliters or 1/2 fluid ounce for use in restaurants, institutions, and passenger carriers, and not intended for sale at retail, shall be exempt from the required declaration of net quantity of contents specified in this regulation.

11.5. Cuts, Plugs, and Twists of Tobacco and Cigars. - When individual cuts, plugs, and twists of tobacco and individual cigars are shipped or delivered in containers that conform to the labeling requirements of this regulation, such individual cuts, plugs, and twists of tobacco and cigars shall be exempt from such labeling requirements.

11.6. Reusable (Returnable) Glass Containers. - Nothing in this Regulation shall be deemed to preclude the continued use of reusable (returnable) glass containers, *provided* such glass containers ordered after the effective date of this regulation shall conform to all requirements of this regulation.

11.7. Cigarettes and Small Cigars. - Cartons of cigarettes and small cigars, containing ten individual packages of twenty, labeled in accordance with the requirements of this regulation, shall be exempt from the requirements set forth in § 8.1.1. Location, § 8.2.1. Minimum Height of Numbers and Letters, and § 10.4. Multi-Unit Packages, *provided* such cartons bear a declaration of the net quantity of commodity in the package.

11.8. Packaged Commodities with Labeling Requirements Specified in Federal Law. - Packages of meat and meat products, poultry products, tobacco and tobacco products, pesticides, and alcoholic beverages shall be exempt from those portions of these regulations specifying location and minimum type size of the net quantity declaration, *provided* quantity labeling requirements for such products are specified in Federal law, so as to follow reasonably sound principles of providing consumer information. (See also § 11.32. SI Units, Exemptions-Consumer Commodities.)

11.9. Fluid Dairy Products, Ice Cream, and Similar Frozen Desserts.

(a) When packaged in 1/2-liquid-pint and 1/2-gallon containers, are exempt from the requirements for stating net contents of 8 fluid ounces and 64 fluid ounces, which may be expressed as 12 pint and 12 gallon, respectively.

(b) When measured by and packaged in measure containers as defined in "Measure Container Code of National Institute of Standards and Technology Handbook 44," are exempt from the requirements of § 8.1.1. Location, that the declaration of net contents be located within the bottom 30 percent of the principal display panel.

(c) Milk and milk products when measured by and packaged in glass or plastic containers of 1/2-pint, 1-pint, 1-quart, 1/2-gallon, and 1-gallon capacities are exempt from the placement requirement of § 8.1.1. Location, that the declaration of net contents be located within the bottom 30 percent of the principal display panel, *provided* other required label information is conspicuously displayed on the cap or outside closure, and the required net quantity of contents declaration is conspicuously blown, formed, or molded on, or permanently applied to that part of the glass or plastic container that is at or above the shoulder of the container.
(Amended 1993)

11.10. Single Strength and Less than Single Strength Fruit Juice Beverages, Imitations Thereof, and Drinking Water.

(a) When packaged in glass, plastic, or fluid milk type paper containers of 8- and 64-fluid-ounce capacity, are exempt from the requirements of § 6.2. Largest Whole Unit, to the extent that net contents of 8 fluid ounces and 64 fluid ounces (or 2 quarts) may be expressed as 1/2 pint (or half pint) and 1/2 gallon (or half gallon), respectively.

(b) When packaged in glass or plastic containers of 1/2 pint, 1-pint, 1-quart, 1/2-gallon, and 1-gallon capacities, are exempt from the placement requirements of § 8.1.1. Location, that the declaration of net contents be located within the bottom 30 percent of the principal display panel, *provided* other label information is conspicuously displayed on the cap or outside closure and the required net quantity of contents declaration is conspicuously blown, formed, or molded into or permanently applied to that part of the glass or plastic container that is at or above the shoulder of the container.
(Amended 1993)

11.11. Soft-Drink Bottles. - Bottles of soft drinks shall be exempt from the placement requirements for the declaration of:

(a) identity, when such declaration appears on the bottle closure, and

(b) quantity, when such declaration is blown, formed, or molded on or above the shoulder of the container and when all other information required by this regulation appears only on the bottle closure.

11.12. Multi-Unit Soft-Drink Packages. - Multi-unit packages of soft drinks are exempt from the requirement for a declaration of:

(a) responsibility, when such declaration appears on the individual units and is not obscured by the multi-unit packaging, or when the outside container bears a statement to the effect that such declaration will be found on the individual units inside, and

(b) identity, when such declaration appears on the individual units and is not obscured by the multi-unit packaging.

11.13. Butter. - When packaged in 4-ounce, 8-ounce, and 1-pound packages with continuous label copy wrapping, butter is exempt from the requirements that the statement of identity (§ 3.1.1. Parallel Identity Declaration: Consumer Package) and the net quantity declaration (§ 8.1.5. Parallel Quantity Declaration) be generally parallel to the base of the package. When packaged in 8-ounce and 1-pound units, butter is exempt from the requirement for location (§ 8.1.1.) of net

quantity declaration.
(Amended 1980, 1993)

11.14. Eggs. - Cartons containing 12 eggs shall be exempt from the requirement for location (§ 8.1.1.) of net quantity declaration. When such cartons are designed to permit division in half, each half shall be exempt from the labeling requirements of this regulation if the undivided carton conforms to all such requirements.

11.15. Flour. - Packages of wheat flour in conventional 2-, 5-, 10-, 25-, 50-, and 100-pound packages shall be exempt from the requirement in this regulation for location (§ 8.1.1.) of the net quantity declaration.
(Amended 1980, 1993)

11.16. Small Packages. - On a principal display panel of 32 square centimeters (5 sq in) or less, the declaration of quantity need not appear in the bottom 30 percent of the principal display panel if that declaration satisfies the other requirements of this regulation.
(Amended 1980)

11.17. Decorative Containers. - The principal display panel of a cosmetic marketed in a "boudoir-type" container including decorative cosmetic containers of the "cartridge," "pill box," "compact," or "pencil" variety, and those with a capacity of 7.4 mL (1/4 oz) or less, may be a tear-away tag or tape affixed to the decorative container and bearing the mandatory label information as required by this regulation.
(Amended 1980)

11.18. Combination and Variety Packages. - Combination and variety packages are exempt from the requirements in this regulation for:

(a) Location (see § 8.1.1.),

(b) Free area (see § 8.1.4.), and

(c) Minimum height of numbers and letters (see § 8.2.1.).
(Amended 1989)

11.19. Margarine. - Margarine in 1-pound rectangular packages, except for packages containing whipped or soft margarine or packages containing more than four sticks, shall be exempt from the requirement in this regulation for location (see § 8.1.1.) of the net quantity declaration.
(Amended 1980, 1993)

11.20. Corn Flour and Corn Meal. - Corn flour and corn meal packaged in conventional 5-, 10-, 25-, 50-, and 100-pound bags shall be exempt from the requirement in this regulation for location (see § 8.1.1.) of the net quantity declaration.
(Amended 1978, 1980)

11.21. Prescription and Insulin-Containing Drugs. - Prescription and insulin-containing drugs subject to the provisions of § 503(b) (1) or 506 of the Federal Food, Drug, and Cosmetic Act shall be exempt from the provisions of this regulation.

11.22. Camera Film, Video Recording Tape, Audio Recording Tape and Other Image and Audio Recording Media Intended for Retail Sale and Consumer Use. - Image and audio media packaged and labeled for retail sale are exempt from the net quantity statement requirements of this regulation that specify how measurement of commodities should be expressed, *provided*:

(a) Unexposed or Unrecorded Media. - The net quantity of contents of unexposed or unrecorded image and audio media is expressed:

(1) For still film, tape, or other still image media, in terms of the usable or guaranteed number of available still image exposures. The length and width measurements of the individual exposures, expressed in millimeters or inches, are authorized as an optional statement. (Example, "36 exposures, 36 mm x 24 mm" or "12 exposures, 2-1/4 in x 2-1/4 in").

(2) For bulk or movie film, in terms of length (in meters or feet) of film available for exposure.

(3) For all other image and/or audio media, in terms of length of time of electronic media available for recording, together with recording and/or playing speed or other machine settings as necessary. Supplemental information concerning the length of the media **[NOTE 9, see page QC-25]** may be provided.

Supplemental information may be provided on other than the principal display panel.

NOTE 9: *Size, length of media, and format details to ensure interchangeability and other characteristics of audio and imaging media are available in the applicable American National Standards.*

(b) Exposed, Recorded, or Processed Media. - The net quantity of contents of exposed or processed film or prerecorded electronic media shall be expressed in terms of the length of time that is of entertainment value.

"Entertainment value" is defined as that portion of a film, tape, or other media, that commences with the first frame of sound or picture, whichever comes first after the countdown sequence (if any), and ends with either: (a) the last frame of credits; or (b) the last frame of the phrase "The End," or (c) the end of sound,

whichever is last.
(Amended 1990)

11.23. Tint Base Paint. - Tint base paint may be labeled on the principal display panel, in terms of a liter, quart or a gallon including the addition of colorant selected by the purchaser, provided the system employed ensures that the purchaser always obtains a liter, quart or a gallon; and further, provided in conjunction with the required quantity statement on the principal display panel, a statement indicating that the tint base paint is not to be sold without the addition of colorant is presented; and further provided the contents of the container, before the addition of colorant, is stated in fluid ounces elsewhere on the label.

Wherever the above conditions cannot be met, containers of tint base paint must be labeled with a statement of the actual net contents prior to the addition of colorant in full accord with all the requirements of this regulation.
(Added 1972; Amended 1980, 1993)

11.24. Motor Oil In Cans. - Motor oils, when packed in cans bearing the principal display panel on the body of the container, are exempt from the requirements of § 3. Declaration of Identity: Consumer Package, to the extent that the Society of Automotive Engineers (SAE) viscosity number is required to appear on the principal display panel, provided the SAE viscosity number appears on the can lid and is expressed in letters and numerals in type size of at least 6 mm or 1/4 in.
(Amended 1974, 1980, 1993)

11.25. Pillows, Cushions, Comforters, Mattress Pads, Sleeping Bags, and Similar Products. - Those products, including pillows, cushions, comforters, mattress pads, and sleeping bags, that bear a permanent label as designated by the Association of Bedding and Furniture Law Officials or by the California Bureau of Home Furnishings shall be exempt from the requirements for location (§ 8.1.1.), size of letters or numbers (§ 8.2.1. and 8.2.2.), free area (§ 8.1.4.), and the declarations of identity and responsibility (§ 3.1. and 5.), *provided* declarations of identity, quantity, and responsibility are presented on a permanently attached label and satisfy the other requirements of this Regulation, and further, *provided* the information on such permanently attached label be fully observable to the purchaser.
(Added 1973)

11.26. Commodities' Variable Weights and Sizes. - Individual packaged commodities put up in variable weights and sizes for sale intact, and intended to be weighed and marked with the correct quantity statement prior to or at the point of retail sale, are exempt from the requirements of § 6. Declaration of Quantity: Consumer Packages, while moving in commerce and while held for sale prior to weighing and marking, *provided* the outside container bears a label declaration of the total net weight.
(Added 1973)

11.27. Packaged Commodities Sold by Count. [NOTE 10, see page QC-26] - When a packaged consumer commodity is properly measured in terms of count only, or in terms of count and some other appropriate unit, and the individual units are fully visible to the purchaser, such packages shall be labeled in full accord with this Regulation except that those containing six or less items need not include a statement of count.
(Added 1973)

NOTE 10: *When the net contents declaration of a package that may enter interstate commerce includes count, Federal regulations under the Federal Fair Packaging and Labeling Act provide no exemption from declaring the count unless the count is one (1).*
(Added 1990)

11.28. Textile Packages. - Packages of textiles that are required by § 6.4.1. to provide a combination declaration stating the quantity of each individual unit and the count shall be exempt from the requirements in this regulation for:

(a) Location (see § 8.1.1.),

(b) Free area (see § 8.1.4.), and

(c) Minimum height of numbers and letters (see § 8.2.1.).
(Added 1971; Amended 1989)

11.29. Spot Label. - The declaration of quantity of the contents of a package is exempt from § 8.1.1. Location, requiring the quantity declaration to appear in the bottom 30 percent of the principal display panel, as long as the declaration of quantity appears in the lower 30 percent of the spot label. In no case may the size of the spot label be used to determine the minimum type size; see § 8.2. for this determination.
(Added 1990)

11.30. Header Strip. - The declaration of quantity of the contents of a package is exempt from § 8.1.1. Location, requiring the quantity declaration to appear in the bottom 30 percent of the principal display panel, as long as the declaration of quantity appears in the lower 30 percent of the header strip or header label. In no case may the size of the header strip be used to determine the minimum type size; see § 8.2. for this determination.
(Added 1990)

11.31. Decorative Wallcovering Borders. - Decorative wall-covering borders, when packaged and labeled for retail sale, shall be exempt from the requirements of § 6.6.2., 6.8.2., and 6.9., *provided* the length and width of the border are presented in terms of the largest whole unit in full accord with the other requirements of the regulation.

(Added 1992; Amended 1993)

11.32. SI Units, Exemptions - Consumer Commodities. – The requirements for statements of quantity in SI units (except for those in § 10.10. Packaged Seed and § 11.22. Camera Film, Video Recording Tape, Audio Recording Tape and Other Image and Audio Recording Media Intended for Retail Sale and Consumer Use) in § 6. Declaration of Quantity: Consumer Packages shall not apply to:

(a) Foods packaged at the retail store level,

(b) Random weight packages (see § 2.4. and § 11.1.),

(c) Package labels printed before February 14, 1994,

(d) Meat and poultry products subject to the Federal Meat or Poultry Products Inspection Acts,

(e) Tobacco or tobacco products,

(f) Any beverage subject to the Federal Alcohol Administration Act,

(g) Any product subject to the Federal Insecticide, Fungicide, and Rodenticide Act,

(h) Drugs and cosmetics subject to the Federal Food, Drug and Cosmetic Act,

(i) Nutrition labeling information.

11.33. Inch-Pound Units, Exemptions - Consumer Commodities. - The requirements for statements of quantity in inch-pound units shall not apply to packages that bear appropriate SI units. This exemption does not apply to foods, drugs, or cosmetics or to packages subject to regulation by the Federal Trade Commission, meat and poultry products subject to the Federal Meat or Poultry Products Inspection Acts, and tobacco or tobacco products.
(Added 1999)

Section 12. Variations to Be Allowed

[NOT ADOPTED]

Section 13. Retail Sale Price Representations

[NOT ADOPTED]

Section 14. Revocation of Conflicting Regulations

[NOT ADOPTED]

Section 15. Effective Date

[NOT ADOPTED]

4512. Additional Requirements. The following requirements apply in addition to those contained within the Uniform Packaging and Labeling Regulation in the National Institute of Standards and Technology Handbook 130.

4512.1. Polyethylene Products. The declaration of quantity of contents for polyethylene products shall be as follows:

(a) Consumer and nonconsumer packages of sheeting and film.

- **Length and width.**
- **Area in square meters or square feet.**
- **Thickness in micrometers and mils. (1 mil = 0.001 in = 25.4 micrometers)**
- **Weight.**

(b) The following consumer products sold at retail shall be labeled in the following terms:

(1) Food wrap.

- **Length and width.**
- **Area in square meters or square feet.**

(2) Lawn and trash bags.

- **Count.**
- **Dimensions.**
- **Thickness in micrometers and mils.**
- **Capacity.**

(3) Food and sandwich bags.

- **Count.**
- **Dimensions.**
- **Capacity (except for fold-over sandwich bags).**

(c) Bags not intended for the retail consumer shall be labeled in terms of:

- **Count.**
- **Dimensions.**
- **Thickness in micrometers or mils.**
- **Weight.**
- **Capacity.**

4512.2. Animal Bedding. Packaged animal bedding of all kinds, except for baled straw, shall be labeled by volume, that is by cubic meter, liter, or milliliter, and by the cubic yard, cubic foot, or cubic inch. If the commodity is packaged in a compressed state, the quantity declaration shall include both the quantity in the compressed state and the usable quantity that can be recovered. Example: "250 ml – expands to 500 ml (500 cu in expands to 1000 cu in)".

4512.3. Enforcement. A sealer may by written order forbid the display for sale, sale, or transport of any package which does not bear the labeling required by Chapter 6, of Division 5 of the Business and Professions Code.

UPLR Appendix A. SI/Inch-Pound Conversion Factors**					
Length					
1 mil (0.001 in)	=	25.4 µm	1 micrometer	=	0.039 370 mil
1 inch	=	2.54 cm*	1 millimeter	=	0.039 370 1 in
1 foot	=	30.48 cm*	1 centimeter	=	0.393 701 in
1 yard	=	0.9144 m*	1 meter	=	3.280 84 ft
1 rod	=	5.029 2 m			
Area					
1 square inch	=	6.4516 cm^2 *	1 square centimeter	=	0.155 000 in^2
1 square foot	=	929.030 cm^2	1 square decimeter	=	0.107 639 ft^2
1 square yard	=	0.836 127 m^2	1 square meter	=	10.763 9 ft^2
Volume or Capacity					
1 cubic inch	=	16.3871 cm^3	1 cubic centimeter	=	0.0610 237 4 in^3
1 cubic foot	=	0.028 316 8 m^3	1 cubic decimeter	=	0.035 314 7 ft^3
1 cubic foot	=	28.3168 L			
1 cubic yard	=	0.764 555 m^3	1 cubic meter	=	35.314 7 ft^3
				=	1.307 95 yd^3
fluid ounce	=	29.573 5 mL	1 milliliter	=	0.033 814 fl oz
1 liquid pint	=	473.177 mL	1 liter	=	1.056 69 liq qt
	=	0.473 177 L	1 liter	=	0.264 172 gal
1 liquid quart	=	946.353 mL	1 dry pint	=	550.610 5 mL
	=	0.946 353 L	1 dry quart	=	1.101 221 L
1 gallon	=	3.785 41 L	1 peck	=	8.809768 L
1 bushel	=	35.2391 L	1 gill	=	118.2941 mL
Mass (Weight)					
1 ounce	=	28.349 5 g	1 milligram	=	0.000 035 274 oz
1 pound	=	453.592 37 g*		=	0.015 432 4 grain
	=	453 592 kg	1 gram	=	0.035 274 oz
1 grain	=	64.79891 mg	1 kilogram	=	2.204 62 lb
Temperature					
$t_{\circ C} = \frac{5}{9}(t_{\circ F} - 32)$ *			$t_{\circ F} = 1.8\ t_{\circ C} + 32$ *		

* Exactly

** These conversion factors are given to six or more significant digits in the event such accuracy is necessary. To convert to inch-pound units, divide by the factor rather than multiplying.

[THIS PAGE LEFT INTENTIONALLY BLANK]

UPLR Appendix B. Converting Inch-Pound Units to SI Units for Quantity Declarations on Packages

Conversion - To convert an inch-pound quantity to an SI quantity, multiply the appropriate conversion factor in Table 1 in Appendix A by the inch-pound unit and round according to the following rules.

Rounding and Significant Digits - It is the packager's responsibility to round converted values appropriately and select the appropriate number of significant digits to use in quantity declaration. [These rounding rules are for converting quantity determinations on packages and do not apply to digital scales that automatically round indications to the nearest indicated value.] Conversions, the proper use of significant digits, and rounding must be based on the packer's knowledge of the accuracy of the original measurement that is being converted. For example: If a package is labeled 453.59 g (1 lb), the packer is implying that the package declaration is accurate within ± 0.005 g (or ± 5 mg). For liquid volume measure, a label declaration of 473 mL (16 fl oz) implies that the package declaration is accurate to within ± 0.5 mL (0.01 fl oz). The requirements of 6.13. Rounding apply to all quantity declarations that are derived from converted values:

> **6.13. Rounding.** - In all conversions for the purpose of showing an equivalent SI or inch-pound quantity to a rounded inch-pound or SI quantity, or in calculated values to be declared in the net quantity statement, the number of significant digits retained must be such that accuracy is neither sacrificed nor exaggerated. Conversions, the proper use of significant digits, and rounding must be based on the packer's knowledge of the accuracy of the original measurement that is being converted. In no case shall rounded net contents declarations overstate a quantity; the packer may round converted values down to avoid overstating the net contents.

NOTE: *When as a result of rounding SI or customary inch-pound declarations calculated based on the conversion factors in Appendix A, the resulting declarations are not exact, the largest number will be used for enforcement purposes to determine whether a package contains at least the declared amount of the product.*

Do not round conversion factors or any other quantity used or determined in the calculation; only round the final quantity to the number of significant digits needed to maintain the accuracy of the original quantity. Use the rounding rules presented below in Table 1 as guidance to round the final result. In general, quantity declarations on consumer commodities should only be shown to two or three significant digits (for example, 453 g or 85 g). Any final zeros to the right of the decimal point need not be expressed. The inch-pound and SI declarations of quantity must be accurate and equivalent to each other. For example, a package bearing a net weight declaration of 2 lb (32 oz) must also include an SI declaration of 907 g.

Table 1. Rounding Rules

When The First Digit Dropped is:	The Last Digit Retained is:	Examples
less than 5	Unchanged	2.44 to 2.4 2.429 to 2.4
more than 5, or 5 followed by at least 1 digit other than 0	Increased by 1	2.46 to 2.5 2.451 to 2.5
5 followed by zeros	Unchanged if Even, or Increased by 1 if Odd	2.450 to 2.4 2.550 to 2.6

(a) When the first digit discarded is less than five, the last digit retained should not be changed. For example, if the quantity 984.3 is to be declared to three significant digits, the figure 3 to the right of the decimal point must be discarded since it is less than 5 and the last digit to be retained (the figure "4") will remain unchanged. The rounded number will read 984. The same rationale applies to numbers declared to two significant digits (for example 68.4 and 7.34); again the final digit is dropped and the last digit retained remains unchanged so that the "rounded-off" numbers become 68 and 7.3, respectively.

(b) When the first digit to be discarded is greater than five, or it is a five followed by at least one digit other than zero, the last digit to be retained should be increased by one unit.

Examples:

984.7	becomes	985
984.51	becomes	985
6.86	becomes	6.9
6.88	becomes	6.9

(c) When the first digit to be discarded is exactly five, followed only by zeros, the final digit to be retained should be rounded up if it is an odd number (1, 3, 5, 7, or 9), but no adjustment should be made if it is an even number (2, 4, 6, or 8).

Examples:

984.50	becomes	984
985.50	becomes	986
68.50	becomes	68
7.450	becomes	7.4
7.550	becomes	7.6

* Note: See additional examples on page QC-33.

2. Additional Advice on Rounding and Significant Digits

A. These rules require the packer to use good judgement in making decisions on how to round and the number of significant digits to use in quantity declarations. Rounding should always be done in one step; for example, if 16.94647 g has to be rounded to 3 significant digits, it should be rounded to 16.9 g, not 16.9465, then to 16.946, then to 16.95 which would then round to 17.0 g (see rounding rules above).

B. Do not use rounded SI values to calculate quantities. For example, using 1 inch = 25.4 mm, rounded to 25 mm, should not be multiplied by 2 to determine the SI equivalent for 2 inches. The SI equivalent for 2 in is determined by multiplying 2 in x 25.4 mm = 50.8 mm, then rounding to 51 mm.

C. If a dimension given as 8 feet is valid to the nearest 1/10 inch, consider it to mean 96.0 inches and treat it as having 3 significant digits. The rounded dimension would then be 2.44 m instead of 2.4 m.

D. Conversions using a multiple digit conversion factor usually give a product with more digits than the original quantity. The final product should contain no more significant digits than are contained in the number with the fewest significant digits used in the conversion. For example, the area of a sheet of paper is determined on a calculator by multiplying 1.25 cm (length) x 1.5 cm (width) = 1.875 cm^2. The product given to 4 significant digits on the calculator cannot be any more accurate than 2 significant digits (the number of significant digits in 1.5 cm), so the area should be declared as 1.9 cm^2.

E. Packagers of consumer commodities should be aware that when a converted value is rounded up, there may be a need to (1) increase the package contents and/or, (2) select a converted value that does not exaggerate the precision of the quantity or overstate the net contents. For example, under the rules above, a net weight declaration of 16 oz (453.592 437 g) would be rounded up 0.4 g to 454 g for 3 significant digits. Inspections by weights and measures officials are typically conducted using devices with a resolution of 0.5 g or less. If the packer does not address this possibility, some lots of commodities may pass when the inch-pound declaration is tested, but fail when the SI declaration is verified.

Examples		
Weight: to convert ounces to grams – multiply ounces x 28.349 5 grams		
Inch-pound	Calculated SI	Rounded SI
1.0 oz	28.349 5 g	28 g
5.0 oz	141.747 6 g	142 g*
10 1/4 oz	290.582 38 g	291 g*
16.0 oz	453.592 4 g	454 g*
32.0 oz	907.184 g	907 g
48.0 oz	1360.776 g	1.36 kg
5 lb	2.267 961 85 kg	2.27 kg*
10 lb	4.535 923 7 kg	4.54 kg*
25 lb	11.339 809 25 kg	11.3 kg
Liquid Volume: to convert fluid ounces to milliliters multiply fluid ounces x 29.573 5 milliliters		
Inch-Pound Quantity	Calculated SI Quantity	Rounded SI
1.0 fl oz	29.573 5 mL	30 mL*
8.0 fl oz	236.588 mL	237 mL*
16.0 fl oz	473.176 mL	473 mL
32.0 fl oz	947.353 mL	947 mL
1 gal	3.785 41 L	3.79 L*
2-1/2 gal	9.463 525 L	9.46 L
5 gal	18.927 05 L	18.9 L
* See E in Section 2 on page QC-32		
Dry Measure: to convert dry pints to milliliters - multiply dry pints x 550. 610 5 milliliters		
Inch-Pound Quantity	Calculated SI Quantity	Rounded SI Quantity
1 dry pt	550.610 5 mL	551 mL*
1 dry qt	1.101 221 L	1.1 L
Length: to convert inches to millimeters - multiply inches x 25.4 millimeters		
Inch-Pound Quantity	Calculated SI Quantity	Rounded SI Quantity
1 in	25.4 mm	25 mm
10.5 in	266.7 mm	267 mm* or 26.7 cm*
1 ft	30.48 cm	305 mm* or 30.5 cm*
5 ft	152.4 cm	152 cm or 1.5 m
50 ft	15.240 03 m	15.2 m
100 ft	30.480 06 m	30.5 m*
* See E in Section 2 on page QC-32		

[THIS PAGE LEFT INTENTIONALLY BLANK]

Article 3. Wood for Fuel Purposes

4530. Definitions. - The following definitions apply to this article only and do not affect the provisions of any other section, article, or chapter. Nothing in this article shall be deemed to apply to charcoal sold for fuel purposes.

(a) Bulk Firewood. All firewood which is not packaged and all packaged firewood of quantities greater than four cubic feet.

(b) Cord. The cord is the standard measure for bulk firewood, and shall contain 128 cubic feet of wood, ranked and well-stowed.

(c) Firewood. "Firewood" has the same meaning as "wood for fuel purposes".

(d) Kindling. Small pieces of wood that are readily ignited and primarily used in starting a fire.

(e) Manufactured Products. Compressed or non-compressed products for fuel purposes made from, but not limited to, sawdust, treated or untreated chips or chunks, cut or split wood.

(f) Other Terms. The use of the terms "face cord", "rack", "rick", "tier", "pile" or "truck-load", or any other term describing a unit of measure different than those specified in this article shall be prohibited.

(g) Ranked and Well-Stowed. Wood placed in a row or rows, with individual pieces touching and parallel to each other and stacked in a compact manner minimizing spaces between pieces.

(h) Sell. "Sell" has the same meaning as defined in Business and Professions Code Section 12009.

(i) Wood for Fuel Purposes. Any kindling, logs, boards, timbers, slab wood, mill wood, manufactured products, cut timber, or other wood, split or not split, used for or intended to be used for campfires, or for heating in fireplaces or stoves, or for cooking.

NOTE: Authority cited: Sections 12024.11, 12027 and 12107.1, Business and Professions Code. Reference: Sections 12024.11 and 12107.1, Business and Professions Code.

4531. Method of Sale. - Wood, for fuel purposes, shall be sold or offered for sale by cord measure, fraction of the cord, or percentage of the cord, excepting as hereinafter provided.

(a) Wood for fuel purposes, other than manufactured products, when sold in quantities less than one-eighth cord, shall be sold by the cubic foot or fraction of the cubic foot.

(b) Manufactured products for fuel purposes shall be sold as follows:

(1) Compressed products having any dimension greater than six inches shall be sold by weight and count.

(2) Compressed products not greater than six inches in any dimension shall be sold by weight.

(3) Noncompressed products not greater than six inches in any dimension shall be sold by the cubic foot or fraction of the cubic foot.

NOTE: Authority cited: Sections 12024.11, 12027 and 12107.1, Business and Professions Code. Reference: Sections 12024.11 and 12107.1, Business and Professions Code.

4532. Invoice. - A sales invoice or delivery ticket shall be presented by the seller to the purchaser whenever any non-packaged wood for fuel purposes is sold. The sales invoice or delivery ticket shall contain at least the name and address of the seller, the date purchased or delivered, the quantity purchased, and the price of the quantity purchased.

NOTE: Authority cited: Sections 12024.11, 12027 and 12107.1, Business and Professions Code. Reference: Sections 12024.11 and 12107.1, Business and Professions Code.

4533. Kindling. - Whenever kindling is included as part of the represented quantity and is ten percent or more by volume of the represented quantity, the percentage of kindling, within five percent by volume, shall be stated on the label or sales invoice or delivery ticket.

NOTE: Authority cited: Sections 12024.11, 12027 and 12107.1, Business and Professions Code. Reference: Sections 12024.11 and 12107.1, Business and Professions Code.

4534. Identity. - Whenever there is a representation as to the species, species group of origin or the type of wood, the representation or statement of identity shall be consistent with one of the following:

(a) If a common name is stated, all wood shall be of that species (e.g., White Oak, Jeffery Pine, Grand Fir, etc.).

(b) If a group is stated, all wood shall be of that same group of origin (e.g., oak, pine, fir, etc.).

(c) If either hardwood or softwood is stated, all wood must be of that type and the common name or group of origin for any wood present must be stated. If there is a mixture of types (hardwood and softwood), the percentage

of each, within 10% of volume of each, shall be stated. The volume of each shall be determined as per the volumetric test procedures set forth below.

NOTE: Authority cited: Sections 12024.11, 12027 and 12107.1, Business and Professions Code. Reference: Sections 12024.11 and 12107.1, Business and Professions Code.

4535. Volumetric Test Procedure for Bulk Firewood.

4535.1. Stacking:

(a) Firewood shall be measured when ranked and well-stowed, and stacked in a geometrical shape that will facilitate volume calculations (i.e., rectangular, triangular or combination of the two). The stack may need some adjustment to meet these requirements. (See Figure 1.)

NOTE: If the wood is stacked in multiple rows, the measurements of the individual rows are used to determine the volume of the total stack.

NOTE: Authority cited: Sections 12024.11, 12027 and 12107.1, Business and Professions Code. Reference: Sections 12024.11 and 12107.1, Business and Professions Code.

Figure 1.

Cord of 128 cubic feet ranked and well-stowed.

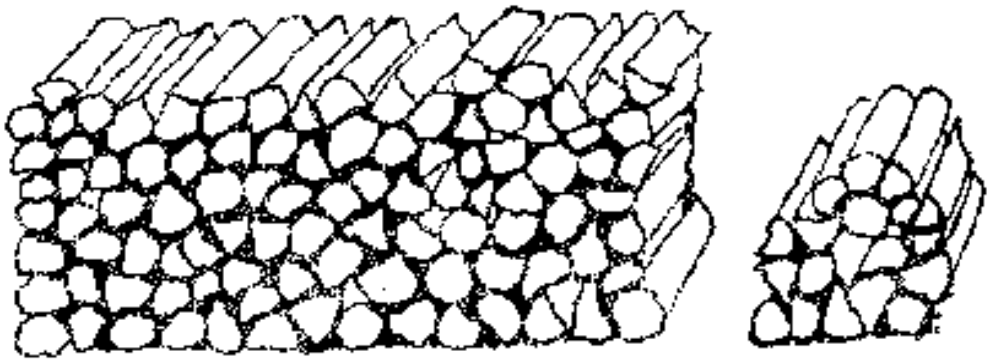

Same cord of 128 cubic feet that is not ranked and well-stowed. Shows overage!

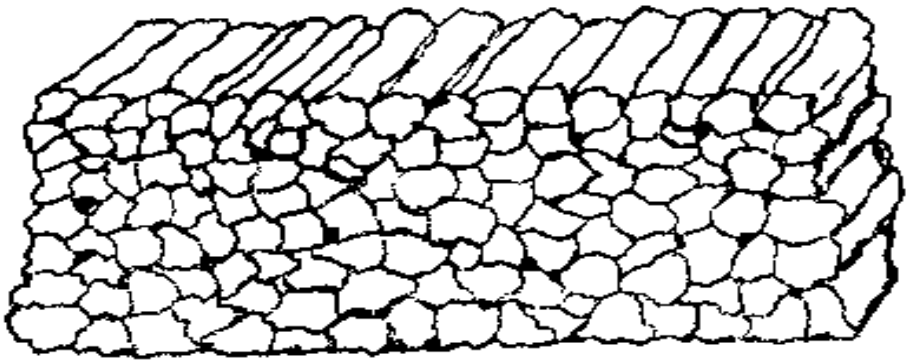

4535.2. Measuring:

NOTE: A calibrated linear measure shall be used.
All measurements shall be taken in increments no greater than 1/8 inch and rounded up.
More measurements than specified may be taken.

(a) Measurement of the rectangular portion of a stack.

(1) Average height determination of a rectangular stack: Starting at one end of the stack, measure the height of the stack, on both sides, at approximately 2 foot intervals, along the length of the stack, or at four proportionately equal intervals if the stack is less than 6 feet long. (Minimum of 4 measurements on each side shall be taken.) Calculate the average height. (See Figure 2.)

Figure 2. Height of Stack.

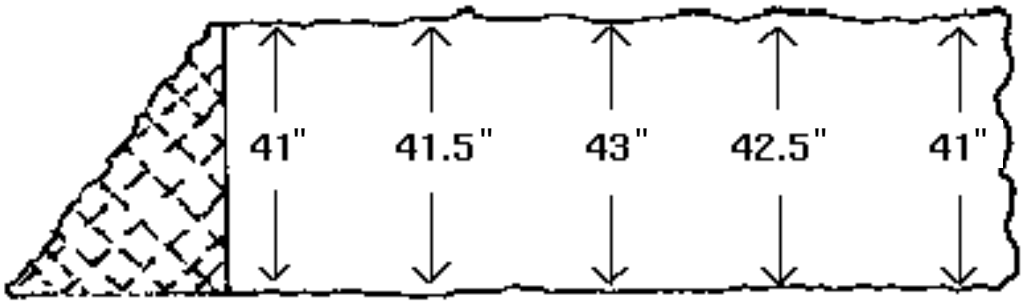

Average Height = (41" + 41.5" + 43" + 42.5" + 41") ÷ 5 = 41.8 inches

(2) Average length of a rectangular stack determination: Starting at the base, measure the length of the stack at approximate 1 foot intervals up to the top, or at four proportionately equal intervals if the stack is less than 3 feet high. (Minimum of 4 measurements shall be taken.) Calculate the average length. (See Figure 3.)

Figure 3. Length of Stack.

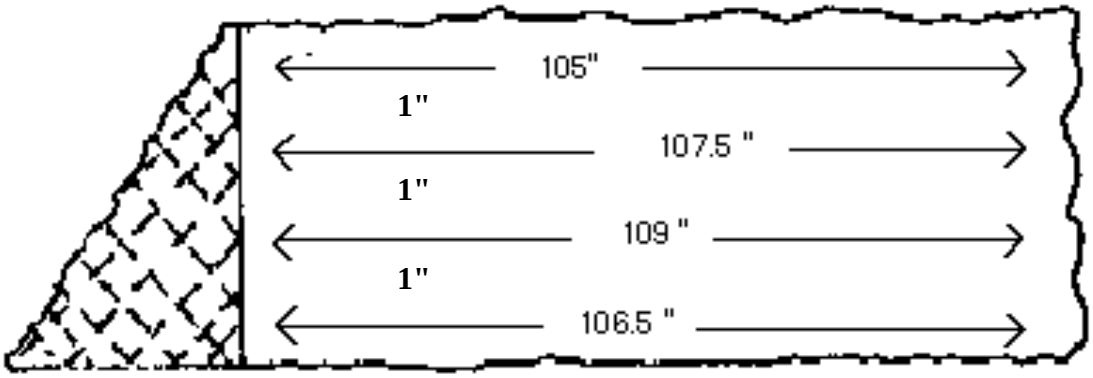

Average Length = (106.5" + 109" + 107.5" + 105") ÷ 4 = 107 inches

(3) Average width of stack determination: This dimension is calculated by averaging the length of individual pieces of wood. A representative random sample of the individual pieces shall be selected. If a triangular stack is combined with a rectangular stack, the sample shall be selected randomly from the entire stack. The minimum size of the sample shall be as shown in the following table.

Amount Represented	Number of Pieces
1/2 cord and less	12
More than 1/2 cord to 1 cord	24
Over 1 cord to 1-1/2 cords	36
Over 1-1/2 cords to 2 cords	48
Over 2 cords	48 plus 12 for each 1/2 cord or fraction thereof

Measure the length of the pieces, measuring from center-to-center, as shown in Figure 4. Calculate the average length.

Figure 4. Length of Angle-Cut Log.

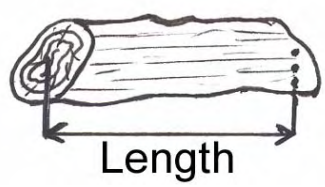

Average Length = (18" + 18.25" + 19" + 17.75" + 18.5" + 18") ÷ 6 = 18.25 inches

(b) Measurement of the triangular portion of a stack:

(1) Measure the height and the base of the triangular portion. (See Figure 5.)

(2) Average width of the stack is as previously calculated in Section 4535.2.(a)(3).

NOTE: Authority cited: Sections 12024.11, 12027 and 12107.1, Business and Professions Code. Reference: Sections 12024.11 and 12107.1, Business and Professions Code.

Figure 5. Triangular Measurements.

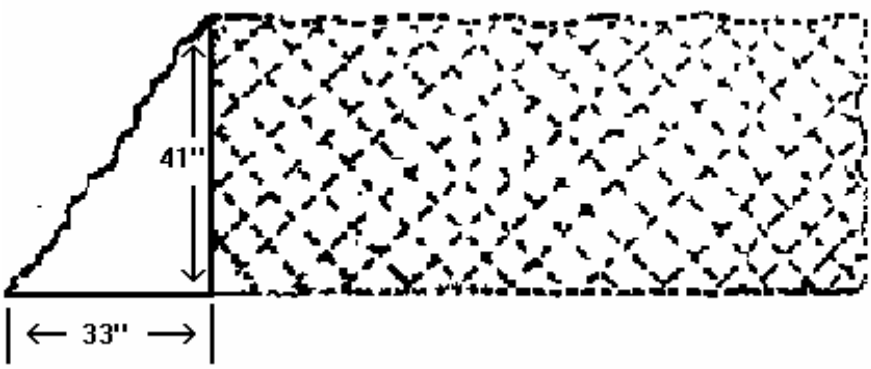

4535.3. Calculate the volume:

(a) Volume of the rectangular portion = average height of the stack x average length of the stack x average width of the stack.

(Example: 41.8" x 107" x 18.25" = 81,624.95 cubic inches.)

(b) Volume of the triangular portion = height x base length x average width of the stack divided by 2.

(Example: 41" x 33" x 18.25" ÷ 2 = 12,346.125 cubic inches.)

(c) Volume of the combined portions = volume of the rectangular portion + volume of triangular portion. (Example: 81,624.95 cu in + 12,346.125 cu in = 93,971.075 cubic inches.)

NOTE: For stacks with multiple rows, the volume of the total stack is the sum of the volumes of the individual rows.

(d) Volume of stack in cords = volume of stack in cubic inches divided by 221,184 cubic inches per cord.

(Example: 93,971.075 cu. in. ÷ 221,184 cu. in. per cord = 0.42 cords.)

(e) Percentage of the cord = decimal fraction of the cord times 100.

(Example: 0.42 cords x 100 = 42% [Percent].)

NOTE: Authority cited: Sections 12024.11, 12027 and 12107.1, Business and Professions Code. Reference: Sections 12024.11 and 12107.1, Business and Professions Code.

TABLE OF EQUIVALENTS				
1 cubic foot = 1,728 cubic inches 1 cord = 128 cubic feet = 221,184 cubic inches				
Common Fractions		Decimal Fractions		Percentages
1/8	=	.125	=	12.5%
1/4	=	.25	=	25%
3/8	=	.375	=	37.5%
1/2	=	.5	=	50%
5/8	=	.625	=	62.5%
3/4	=	.75	=	75%
7/8	=	.875	=	87.5%

4536. Volumetric Test Procedure for Packaged Firewood With a Labeled Net Content of Four Cubic Feet or Less.

NOTE: A calibrated linear measure shall be used.

All measurements shall be taken in increments no greater than 1/8 inch and rounded up, except as noted in 4536.1.(a).

Unless otherwise indicated, all measurements are to be taken without rearranging the wood or removing it from the package.

If the layers of wood are cross hatched or not ranked in discrete sections in the package, the wood shall be removed from the package and measured according to the procedures prescribed in Sections 4535.1 through 4535.3 of this regulation.

Lot compliance shall be determined using the sampling procedures in Chapter 11 of this Division, except that the maximum allowable variations for individual packages labeled by volume shall not be applied to packaged firewood.

NOTE: Authority cited: Sections 12024.11, 12027 and 12107.1, Business and Professions Code. Reference: Sections 12024.11 and 12107.1, Business and Professions Code. California Hotwood, Inc. v. Henry Voss, et al. (Super. Ct. San Joaquin County, 1991, No. 234613).

4536.1. Boxed Firewood.

(a) Average height determination of wood within the box: Open the box and measure the internal height of the box (h). Take three measurements (d) along each end of the stack by measuring from the bottom of a straight edge placed across the top of the box to the highest point on the two outermost top pieces of wood and the centermost top piece of wood rounding measurements down to the nearest 1/8 inch. However, if there are obviously pieces missing out of the top layer of wood, additional height measurements shall be taken at the highest point of the uppermost pieces of wood located at the midpoints between the three measurements on each end of the stack. (See Figure 6.) The average height of the stack is calculated by averaging these measurements and subtracting from the internal height of the box.

FIGURE 6.

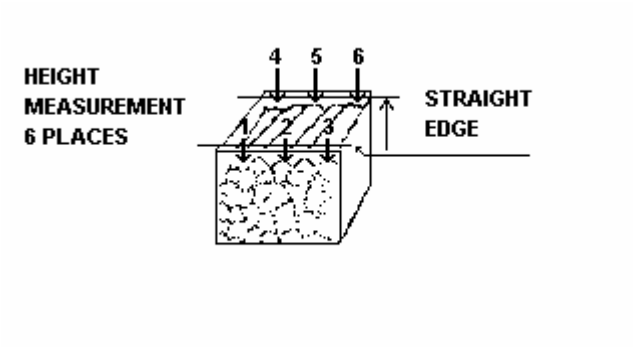

Calculate the average height of stack.

$$\text{Average Height of Stack} = h - [(d^1 + d^2 + d^3 + d^4 + d^5 + d^6) \div 6]$$

(b) Average width of the wood within the box: Determine the width of the stack of wood at three places along the top of the stack. These measurements shall be taken on both ends and in the middle of the box, measuring the inside distance from one side of the box to the other, perpendicular to the long axis of the wood. (See Figure 7.)

FIGURE 7.

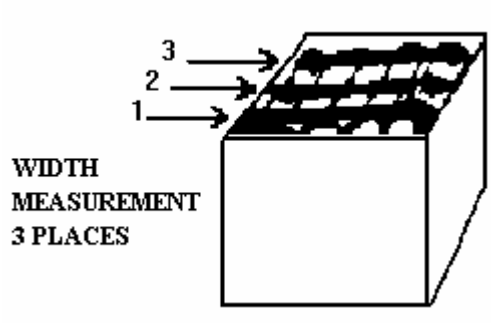

Calculate the average width.

$$\text{Average Width} = (W^1 + W^2 + W^3) \div 3$$

(c) Average length of the pieces of wood: Remove the wood from the box and select the five pieces with the greatest girth. Measure the length of the five pieces, measuring from center-to-center, as shown in Figure 8.

FIGURE 8.

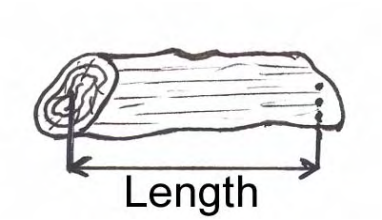

Calculate the average length of the five pieces.

$$\text{Average Length} = (L^1 + L^2 + L^3 + L^4 + L^5) \div 5$$

(d) Calculate the volume of the wood within the box.

$$\underset{\text{(in cu ft)}}{\text{Volume of Wood}} = \underset{\text{(in inches)}}{\text{Average Height}} \times \underset{\text{(in inches)}}{\text{Average Width}} \times \underset{\text{(in inches)}}{\text{Average Length}} \div 1728\,\text{in}^3/\text{ft}^3$$

(e) For boxes of wood which are packed with the wood ranked in two discrete sections, which are perpendicular to each other, calculate the volume of wood in the box by determining the average height, width, and length as in (a), (b), and (c) above for each discrete section and totaling the calculated volumes of the two sections. Except that the width measurement for V_2 shall be taken from the inside edge of the box adjacent to V_2 to the plane separating V_1 and V_2. (See Figure 9.)

FIGURE 9.

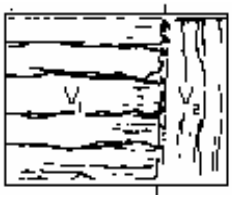

TOTAL VOLUME = $V_1 + V_2$

NOTE: Authority cited: Sections 12024.11, 12027 and 12107.1, Business and Professions Code. Reference: Sections 12024.11 and 12107.1, Business and Professions Code. California Hotwood, Inc. v. Henry Voss, et al. (Super. Ct. San Joaquin County, 1991, No. 234613).

4536.2. Bundles and Bags of Firewood.

(a) Average area of ends: Secure a strap around each end of the bundle or bag of wood to prevent movement during testing and to provide a definite perimeter. Set one end of the bundle or bag on tracing paper large enough to cover the end completely. Draw a line around the perimeter of the bundle or bag on the tracing paper. Transfer the tracing paper to a template graduated in square inches. Count the number of square inches enclosed within the perimeter line (portions of square inches not completely within the perimeter line shall be estimated to the nearest one quarter square inch). Repeat this process on the opposite end of the bundle or bag.

NOTE: Two thin straps, one inch to two inches wide, with connecting buckles, and long enough to easily encircle the bundle or bag, should be used to secure the wood.

Calculate the average area.

$$\text{Average Area} = (\text{Area \#1} + \text{Area \#2}) \div 2$$

(b) Average length of the pieces of wood: Select the five pieces with the greatest girth. Measure the length of the pieces as shown in Figure 8 for boxed wood.

Calculate the average length of the pieces of wood.

$$\text{Average Length} = (L^1 + L^2 + L^3 + L^4 + L^5) \div 5$$

(c) Calculate the volume of the wood.

$$\underset{\text{(in cu ft)}}{\text{Volume of Wood}} = \underset{\text{(in inches}^2\text{)}}{\text{Average Area}} \times \underset{\text{(in inches)}}{\text{Average Length}} \div 178\ \text{in}^3/\text{ft}^3$$

NOTE: Authority cited: Sections 12024.11, 12027 and 12107.1, Business and Professions Code. Reference: Sections 12024.11 and 12107.1, Business and Professions Code. California Hotwood, Inc. v. Henry Voss, et al. (Super. Ct. San Joaquin County, 1991, No. 234613).

[THIS PAGE LEFT INTENTIONALLY BLANK]

Chapter 11. Sampling and Testing Procedures for Determining the Net Contents of Packaged Commodities

4600. National Uniformity. - Sampling and testing procedures for determining the net contents of packaged commodities shall conform to the latest requirements set forth in the National Institute of Standards and Technology Handbook 133, "Checking the Net Contents of Packaged Goods," which is herein incorporated by reference. Copies of Handbook 133 may be purchased from the Superintendent of Documents, U.S. Government Printing Office, Washington, DC 20402.

NOTE: Authority cited: Sections 12027, 12211, and 12609, Business and Professions Code. Reference: Section 12211, Business and Professions Code.

[THIS PAGE LEFT INTENTIONALLY BLANK]

Chapter 12. Administration

Article 1. Permit Reform Act.

4700. Permit Processing Times (Including Licenses, Permits, Regulations and Certificates).

(a) Within the number of calendar days of receipt of an application for a permit shown in column A of subsection (c), the Division shall inform the applicant in writing that the application is either complete and accepted for filing, or that it is deficient, and what specific information or documentation is required to complete the application. An application is considered complete if all necessary fees and information required by the application form have been submitted.

(b) Within the number of calendar days after receipt of a complete application, as shown in column B of subsection (c), the Department shall approve or disapprove the application.

(c) The Division's minimum, median, and maximum time periods, in calendar days, for processing an application from the receipt of the initial application to the final decision, based on the Department's actual performance during the two years immediately preceding the proposal of this section, are shown in columns C, D, and E of the chart which follows.

	A	B	C	D	E
			ACTUAL DAYS TO PROCESS BASED ON PRIOR TWO YEARS		
Permit Type	Maximum time for notifying that application is complete or deficient (Days)	Maximum time after receipt of a complete application to issue or deny permit (Days)	Minimum	Median (Days)	Maximum
Device Repairman Registration	30	35	1	6	52
- Renewal	7	60	1	17	66
Weighmaster License	15	45	2	12	84
- Renewal	45	45	2	12	84

NOTE: Authority cited: Section 15376, Government Code; and Section 12027, Business and Professions Code. Reference: Section 15376, Government Code.

4701. Appeal Procedure.

(a) The following information shall be included on application forms for all Department permits subject to Government Code Sections 15374-15378:

"The Department of Food and Agriculture has established time periods for the processing of permit applications, in compliance with Government Code Sections 15374-15378. Failure to comply with these time periods may be appealed to the Secretary of Food and Agriculture, 1220 N Street, P.O. Box 942871, Sacramento, CA 94271-0001, pursuant to regulations set forth in Title 4, California Code of Regulations, Section 4701. Under certain circumstances, the Secretary may order that the applicant receive a reimbursement of filing fees."

(b) An applicant whose application for a permit has not been processed by the Department within the time periods established by Section 4700 may appeal in writing to the Secretary of the Department of Food and Agriculture. The appeal shall set forth a concise statement of facts and chronology of events regarding the application. An appeal concerning a permit application on which a final decision has been made must be filed within 30 days of the date the applicant was notified of the decision.

(c) The Secretary shall promptly review an appeal filed under this section and, shall issue a decision within 30 days after conducting any investigation of the matter which the Secretary deems appropriate.

(d) If the Secretary finds that a program exceeded the time limit for informing the permit applicant that an application is complete or is deficient and requires additional information to be processed, the Secretary shall direct the program to make its determination by a specified date and so inform the applicant.

(e) The time period within which the Department must make a decision to issue or deny the permit commences with the date the complete application is received. If the Secretary finds that the Department exceeded the time period for acting on a completed application without the good cause defined by Government Code Section 1537(h), all filing fees paid by the permit applicant will be refunded.

NOTE: Authority cited: Sections 15376 and 15378, Government Code; and Section 12027, Business and Professions Code. Reference: Sections 15376 and 15378, Business and Professions Code.

Article 2. Weights and Measures Penalty Guidelines

4800. Notice of Proposed Action and Disposition.

(a) When a county sealer takes administrative action, the person charged with a violation(s) shall be notified of the proposed penalty(s) and the right to request a hearing. The notification shall also include the right to appeal to the Secretary pursuant to the procedures provided in Section 12015.3(c) of the Business and Professions Code.

(b) When the State Sealer takes administrative action, the person charged with the violation(s) shall be notified of the proposed penalty(s), and the right to request a hearing. The notification shall also include the right to have the decision reviewed, within 30 days of the date of the decision, pursuant to Section 1094.5 of the Code of Civil Procedure.

(c) When a respondent in an administrative action agrees to stipulate to the notice of proposed action, a signed stipulation with the payment of the proposed administrative penalty shall be returned to the county/ State Sealer within 45 days of the postmark of the notice of proposed action. If the stipulation and payment of the proposed administrative penalty are not received within 45 days, the county/State Sealer may file a certified copy of a final decision that directs the payment of a civil penalty with the clerk of the superior court of any county. Judgement shall be entered immediately by the clerk in conformity with the decision. No fees shall be charged by the clerk of the superior court for the performance of any official service required in connection with the entry of judgement pursuant to this section.

(d) If an administrative hearing is requested, a final decision and order shall be made by a hearing officer within 60 days of the conclusion of the hearing. This order will be mailed to the respondent. Any penalty imposed shall be due and payable within 45 days of the postmark of such order. If a respondent fails to pay the penalty and fails to timely file a written appeal pursuant to Business and Professions Code Section 12015.3(c), the sealer may take action as provided in Business and Professions Code Section 12015.3(d). Action may be taken to collect the penalty and the collection costs actually incurred.

(e) In the event that a respondent fails to comply with the provisions of Business and Professions Code Section 12015.3, the sealer may take the action proposed without a hearing. This action may include collection of the penalty and the collection costs actually incurred.

NOTE: Authority cited: Section 12015.3(b), Business and Professions Code. Reference: Section 12015.3(b), Business and Professions Code.

4801. Administration.

(a) When a county sealer initiates an action, the sealer shall send a copy of the notice of proposed action to the State Sealer at the time of notice to the person charged with the violation(s). Additionally, the county sealer shall inform the State Sealer of violations for which penalties have been assessed. On at least an annual basis, the State Sealer shall inform county sealers throughout the State of violations for which penalties have been assessed.

(b) When the State initiates the action, the State Sealer shall send a copy of the notice of proposed action to the county sealer involved. This notice shall also be sent, at the time of notice, to the person charged with the violation(s). The State Sealer shall also inform the county sealer in which the action has been initiated of violations for which penalties have been assessed.

NOTE: Authority cited: Sections 12027 and 12028, Business and Professions Code. Reference: Sections 12027 and 12028, Business and Professions Code.

4802. Penalty Guidelines. In applying Section 12015.3 of the Business and Professions Code, the sealer shall use the provisions of this section to determine the types of violations for which penalties may be assessed and the amounts of the penalties. Nothing in this article prohibits a sealer from seeking other relief through the criminal or civil court process in lieu of administrative action.

(a) For the purposes of this article, violation types are designated as “Serious,” “Moderate,” and “Minor.”

(1) “Serious” violations are violations in which there is the potential for actual false, deceptive, or misleading business practices; or significant monetary loss to consumers; or repeated violations of subparagraph (2), arising out of two or more visits, that occurred within a two-year period at the same location and which resulted in an action and subsequent penalty. Included in this category are certain violations subject to prior legislated fine levels pursuant to Business and Professions Code Section 12729. The appropriate penalty range for these violations is $400-$1,000; however, such penalty shall not exceed the maximum criminal fine specified in the charging section.

(2) "Moderate" violations are violations in which there is a reasonable potential for intermediate level of consumer or competitive harm; or repeated violations of subparagraph (3), arising out of two or more visits, that occurred within a two-year period at the same location and which resulted in an action and subsequent penalty. The appropriate penalty range for these violations is $150-$600; however, such penalty shall not exceed the maximum criminal fine specified in the charging section.

(3) "Minor" violations are primarily violations that have minimal effect on the accuracy of the transaction or the level of competition in the marketplace. Included in this category are other violations included in Business and Professions Code, Division 5 that are not included in Table A. The appropriate penalty range for these violations is $50-$250; however, such penalty shall not exceed the maximum criminal fine specified in the charging section.

(b) Table A shall be used to establish the level of severity of a particular violation and its corresponding penalty range. Except where specific violation parameters are provided, the violation column in Table A is an abbreviated description of the corresponding section in the California Business and Professions Code, Division 5, Weights and Measures.

1 = Serious	**2 = Moderate**	**3 = Minor**
($400 to $1,000)	($150 to $600)	($50 to $250)

TABLE A

B&P §	VIOLATION	TYPE		
12016	Hindering or obstructing sealer.	**1**		
12021	Marking or stamping false or short weight or measure on containers: Taking false tare (knowingly).	**1**		
12022.5	Fresh meats or roasts: Advertising/selling on basis of net weight, not including added fat.		**2**	
12023	Selling according to gross weight or measure.		**2**	
12024	Selling in less quantity than represented: Prepackaged - Labeled but not packed on premises.			
	- Single Lot:			
	Overcharge less than 50¢.			**3**
	Overcharge 50¢ to $2.00.		**2**	
	Overcharge more than $2.00.	**1**		
	- Total of All Lots:			
	Overcharge less than $2.00.			**3**
	Overcharge $2.00 to $10.00.		**2**	
	Overcharge more than $10.00.	**1**		
	Short measure bulk wood deliveries.	**1**		

B&P §	VIOLATION	TYPE		
12024.1	Misrepresenting charge for service rendered (willfully).			
	- Overcharge less than 5%.		**2**	
	- Overcharge 5% or more.	**1**		
12024.2	Unlawful computation of value.			
	(A) Test Purchase of Commodities by Weight, Measure, or Count, Determined at Time of Sale: (Applies to any number of items purchased or inspected for pricing integrity)			
	- Overcharged on One Item: Overcharge equals 15¢ or more and is 5% or more of correct value for that item.		**2**	
	- Overcharged on Two or More Items: Total Overcharge equals 15¢ or more and is 3% or more of correct total value for those items.	**1**		
	(B) Scanning/Automated and Other Checkstand Inspections.			
	- Overcharged on fewer than 10% of items purchased or inspected for pricing integrity and total algebraic overcharge is less than 2% of correct total price.[1]			**3**
	- Overcharged on 10% or more but on fewer than 12% of items purchased or inspected for pricing integrity.		**2**	
	- Total algebraic overcharge 2% or more but less than 4% of correct total price.[1]		**2**	
	- Overcharged on 12% or more of items purchased or inspected for pricing integrity.	**1**		
	- Total algebraic overcharge 4% or more of the correct total price[1]	**1**		

[1] Algebraic overcharge is the total of the overcharges in a purchase of multiple items, less the total of the undercharges

B&P §	VIOLATION	TYPE		
12024.3	Selling prepackaged commodities in less quantity than represented (packed and labeled on premises).			
	- Single Lot (unknowingly):			
	Overcharge of $2.00 or less.			**3**
	Overcharge more than $2.00.	**1**		
	- Total of All Lots (unknowingly):			
	Overcharge less than $2.00.			**3**
	Overcharge $2.00 to $10.00.		**2**	
	Overcharge more than $10.00.	**1**		
12024.5	Sale of fowl, meat, or fish other than by weight; ready-to-eat items.		**2**	
12024.55	Door-to-door salespersons; failure to provide price statement on packages.		**2**	
12024.6	Prohibition of advertising intended to entice customer into transaction other than represented.	**1**		
12024.7	Failure to provide: A statement of weight and type of cuts of meat sold; itemized statement showing quantity of fruits, vegetables, and other food products delivered in connection with meat sale.		**2**	
12024.9	Failure to provide a statement of weights supplied to consumer upon direct sale of meat on basis of primal cuts or carcass weight.		**2**	
12024.10	Failure to retain a document stating weight and cut of meat sold.		**2**	
12025	Refusal to exhibit commodity being sold at given weight or quantity.	**1**		
12025.5	Identification of commodity or container ordered “off sale” under §§ 12211 or 12607.	**1**		
12107	Violation of tolerances and specifications for commercial weighing and measuring apparatus.			**3**
12107.1	Establishment of commodity standards, weights, measures, and counts: Procedure: Unlawful sales.			**3**
12500.5	Approval and certification of commercial instruments: Sale or use for commercial purposes of nonapproved instruments.		**2**	

B&P §	VIOLATION	TYPE		
12507	Repair of "out of order" instruments: Time: Disuse: Effect of refusal or neglect to repair: Disposition of seized instruments.	**1**		
12508	Removal or obliteration of sealer's tag or device.	**1**		
12509	Incorrect device into service.		**2**	
12510	Presumption of intent to violate law:			
	(1) Using an incorrect device.		**2**	
	(2) Sells commercial device not sealed within last year.			**3**
	(3) Using a condemned device contrary to law.	**1**		
	(4) Uses for commercial purposes an unsealed, incorrect device not kept at fixed location.		**2**	
	(5) Used to falsify.	**1**		
	(6) Location of retail scale.			**3**
	(7) False computation of price.		**2**	
	(8) Return to zero (knowingly).	**1**		
	(9) Deliver for test.		**2**	
	(10) Sells, uses, rents, loans incorrect device.		**2**	
12512	Purchase of less than true quantity.	**1**		
12515	Repair, sale, or installation of instrument: Failure to notify county sealer: When notification not required.		**2**	
12532	Engaging in business as device repairman or maintaining device repair service without registration.		**2**	
12536	Enrollment of persons who adjust, repair, or install commercial weighing or measuring devices.			**3**
12548	Registrant's identification of work on device: Adhesive tag or label.			**3**
12602	Distributing commodity contained in nonconforming package: Exception for wholesale or retail distributors not engaged in packaging or labeling.		**2**	
12603	Regulations to be established by Secretary: Required provisions of regulations.			
	- Identity of commodity and/or name and place of business of packer/distributor/manufacturer.		**2**	
	- Net quantity of contents not on container or label.		**2**	

B&P §	VIOLATION	TYPE		
12605	Prohibition of distribution of packaged commodity containing qualifying words in separate statement of net quantity of contents: Supplemental statements: Prohibited qualifications.		**2**	
12611	Selling commodity in nonconforming container or with nonconforming label: Required information not prominently displayed.		**2**	
12703	License, fee and/or penalty required.		**2**	
12704	License fee.		**2**	
12705	Change in legal entity of licensee.		**2**	
12707	License renewal; failure to pay fee when due.		**2**	
12710	Weighmasters responsible for acts of deputy.	**1**		
12710.5	(b) Failure to notify of replacement/deletion of deputy.			**3**
12711	When weighmaster certificate to be issued.		**2**	
12712	Issuance of certificate by one other than weighmaster making determination; transfer of weight or measure to other certificate.			
	(a) Certificates issued based on information from another party.		**2**	
	(b) Transfer of weight from one certificate to another.		**2**	
12713	(a) Responsibility for completeness of certificate.		**2**	
	(b) Omitted information on certificate.		**2**	
12714	Certificate legend/principal licensee name.			**3**
12714.5	Information on certificate to be legible; consecutive numbering.			**3**
12715	Contents of certificate.			**3**
12716	Recordkeeping; inspection.		**2**	
12716.5	Correction of errors.		**2**	
12717	Approval, testing, and sealing of weighing or measuring device.		**2**	
12718	(a) Requests a person to weigh, measure, or count falsely.	**1**		
	(b) Requests a false or incorrect weighmaster certificate.	**1**		
	(c) Furnishes or gives false information to a weighmaster.	**1**		
	(d) Knowingly presents for payment a false weighmaster certificate.	**1**		

B&P §	VIOLATION	TYPE		
12718	(e) Knowingly issues a false weighmaster certificate.	**1**		
	(f) Alters a weighmaster certificate resulting in a false weight, measure, or count.	**1**		
	(g) Possesses blank weighmaster certificates if not licensed.	**1**		
	(h) Issues a certificate with alterations or omissions of gross, net, tare weights, net only weights, or measurements.	**1**		
12719	Change of net contents after recordation of weight.	**1**		
12720	Alteration of tare weight of vehicle prior to determining net weight of commodity.	**1**		
12721	Weighing for purposes of certification.	**1**		
12722	Use of predetermined tare weight; exemption for specified rock products.			
	(a) Violation of tare regulations.	**1**		
	(b) Rock, sand, and gravel predetermined tares.	**1**		
12724	Determination of gross and tare weights; requirement that all persons be off scale and vehicle; exceptions.		**2**	
12725	Conditions under which gross weight not to be certified.		**2**	
12727	Verification of weight, measure, or count.	**1**		
12728	Requirement that entire vehicle rest on scale; exemption for seed cotton, multiple rail cars containing grain/grain products.		**2**	
12729 (c)	Tomato cab card tare weight. (See B&P Section 12729)	**1**	**2**	
12730	Farm products.		**2**	
12731	Livestock.		**2**	
12732	Adjustments to load; commodity weights determined at other than site where vehicle was loaded.		**2**	
12733	Scrap metal and salvage materials.		**2**	
12734	Squid or anchovy.		**2**	
13411	Sale of petroleum products contingent upon additional purchase.		**2**	
13413	Deceptive, false, or misleading statements (Chapter 14) Petroleum Products.	**1**		

B&P §	VIOLATION	TYPE		
13420 ***13421*** ***13422***	Operators of petroleum dealerships required to make monthly update of advertising medium indicating hours of sale and turn off lights when not open for business.			**3**
13441	Sale or delivery of nonstandard product.	**1**		
13442	Sale or delivery of nonstandard product as motor fuel to be labeled "not gasoline".	**1**		
13451	Sale or delivery of nonstandard diesel, kerosene, or fuel oil.	**1**		
13460 ***13461***	Sale of engine or gear oil which fails to meet specifications.	**1**		
13470	Display of price sign on dispensing apparatus: Contents of sign.		**2**	
13470.5	Gallon-to-liter conversion table.		**2**	
13472	Dual pricing.		**2**	
13480	Sale, etc., of petroleum products from unlabeled containers, etc: Viscosity rating: Containers with net content of gallon or less.			**3**
	(d) Sale of unlabeled or mislabeled gasoline containing alcohol.		**2**	
13482	Sale of lubricant without SAE/API service classification.			**3**
13486	Filling of tanks with product other than that identified on container label.	**1**		
13500	Labeling:			
	(a) No product and/or grade on delivery vehicle.			**3**
13501	Commingling of products.	**1**		
13502 ***13486***	Deliveries into storage tanks.	**1**		
13520	Temperature-corrected gallonage.		**2**	
13530	Application of article; display of price per liter or per gallon.			
	(a) Advertising a price that is not identical with the dispenser.		**2**	
13531	Display requirements; exemption of specified geographic areas; violations.			
	(a) Failure to advertise motor fuel prices.		**2**	

B&P §	VIOLATION	TYPE		
13532	Motor fuel; contents of display:			
	(a) Advertising price signs.			**3**
	(b) Violation of discount advertising.			**3**
	(c) Advertising lower price only. (See also § 13413)		**2**	
	(d) Failure to advertise price in same form.		**2**	
13534	Additional advertising matter.			**3**
13562	Change of designation under which product purchased: Authorization.		**2**	
13568	Written authority; furnishing copies.		**2**	
13570	Percentage of alcohol to be stated on normal business records: Certification of antiknock index.		**2**	
13571	Not providing documentation when requested.		**2**	
13593	Refusal to permit sampling.	**1**		
13595	Selling product which does not meet specifications. (See also §§ 13413, 13441, 13451)	**1**		
	Selling from unlabeled or mislabeled containers. (See also §§ 13413, 13480)			**3**
13600	Unauthorized breaking, etc., of seal.	**1**		
13740	Sale or distribution of adulterated or mislabeled product.	**1**		
13741	Deceptive, false, misleading statement (Chapter 15) Automotive Products	**1**		

NOTE: Authority cited: Sections 12015.3(a) and 12028, Business and Professions Code.
Reference: Sections 12015.3(a) and 12028, Business and Professions Code.